WM-FX20

SERVICE MANUAL

AEP Model
UK Model
E Model

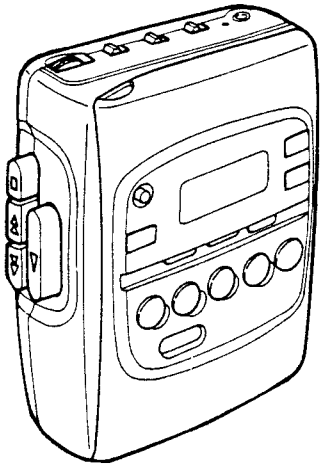

Model Name Using Similar Mechanism	WM-BF23
Tape Transport Mechanism Type	MF-WMFX20

SPECIFICATIONS

Radio section

Frequency range	FM: 87.5 — 108 MHz AM: 531 — 1,602 kHz (9 kHz step) 530 — 1,610 kHz (10 kHz step)
Antennas	FM: Headphone cord antenna AM: Built-in ferrite bar antenna

Tape player section

Frequency response	40 — 15,000 Hz
Power output	10 mW + 10 mW 24/16Ω at DC operation Headphones (stereo minijack): load impedance 8 — 300Ω
Power requirements	3 V DC Two R6 (size AA) batteries DC IN 3 V jack accepts: Optional Sony EBP-500B battery case for use with R20 (size D) batteries Optional Sony AC-D2M power adaptor available in European countries for use on 220 V AC, 50 Hz available in other countries for use on 120 V AC, 60 Hz or 220 V AC, 50 Hz Optional Sony DCC-70 car battery cord for use with 12 V car battery
Battery life	Approx. 9 hours on tape playback and approx. 36 hours on FM reception, using Sony alkaline batteries AM3 (N)
Dimensions	Approx. 92 × 126 × 40.5mm (w/h/d) not incl. projecting parts and controls
Weight	Approx. 278 g incl. batteries and belt clip
Accessories supplied	Belt clip (1) European model: Stereo headphones (open-air type, 1) Other model: Stereo earphones (open-air type, 1)

Notes on stereo earphones

- Ear adaptors are attached on the stereo earphones. If the earphones do not fit your ears, detach the ear adaptors.
- Put the cord behind your neck. The knot cannot be moved.

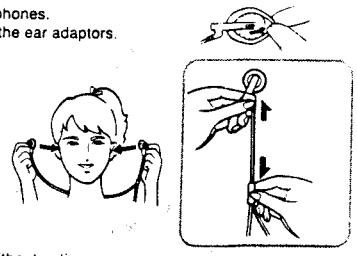

Optional accessories

AC power adaptor AC-D2M
Battery case EBP-500B
Car battery cord DCC-70

Your dealer may not handle some of the above listed accessories.
Please ask the dealer for detailed information.

Design and specifications subject to change without notice.

Note

This appliance conforms with EEC Directive 87/308/EEC regarding interference suppression.

RADIO CASSETTE PLAYER

SONY®

TABLE OF CONTENTS

Section	Title	Page
1.	GENERAL	2
2.	DISSASSEMBLY	3
2-1.	Cabinet, back	3
2-2.	Panel assy, Front removal	3
3.	MECHANICAL ADJUSTMENTS	4
4.	ELECTRICAL ADJUSTMENTS	4
5.	DIAGRAMS	6
5-1.	Block Diagram	6
5-2.	Pin function of IC	9
5-3.	Printing Wiring Boards	11
5-4.	Schematic diagram	15
6.	EXPLODED VIEWS	17
6-1.	Cabinet section	17
6-2.	Mechanism section	18
7.	ELECTRICAL PARTS LIST	19

SECTION 1
GENERAL

This section is extracted from instruction manual.

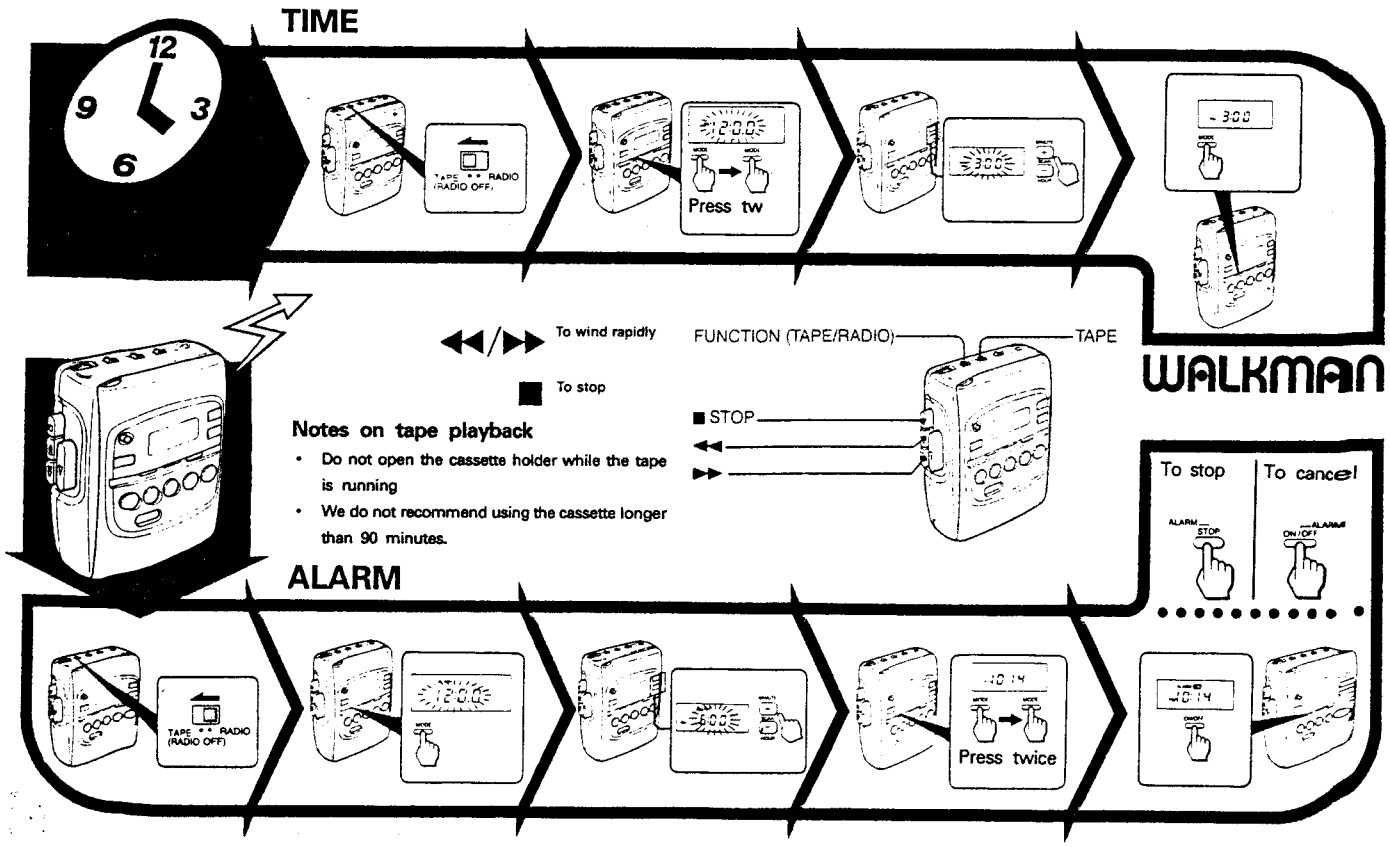

SECTION 2
DISSASSEMBLY

2-1. CABINET, BACK

❶ Remove four SCREW, TAPPING, +1.6×6

❷ While pressing the edge of the CABINET (CENTER) by finger pull up CABINET, (BACK) to the arrow side by finger to take off it.

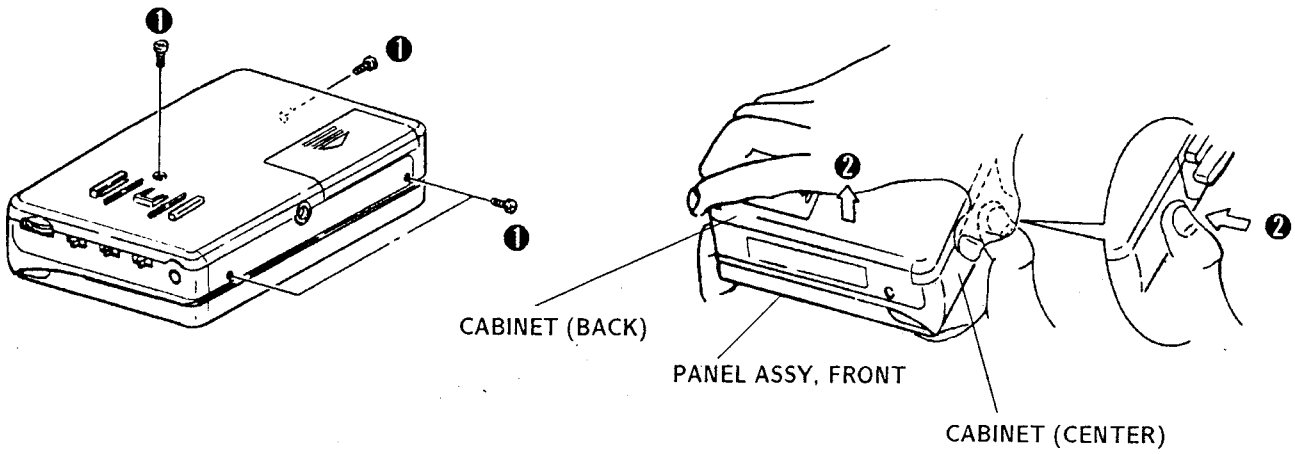

2-2. PANEL ASSY, FRONT REMOVAL

❶ Insert a precision screwdriver (1.4mm flat-blade) vertically into portion Ⓐ and press the hinge plate to arrow side to release it from boss.

❷ Portion Ⓑ to release the hinge plate as same manner with ❶.

❸ Pull up it in order to take off the PANEL ASSY, FRONT

❹ Take off the coil spring from CABINET (CENTER) with a precision screwdriver (0.8mm flat-blade).

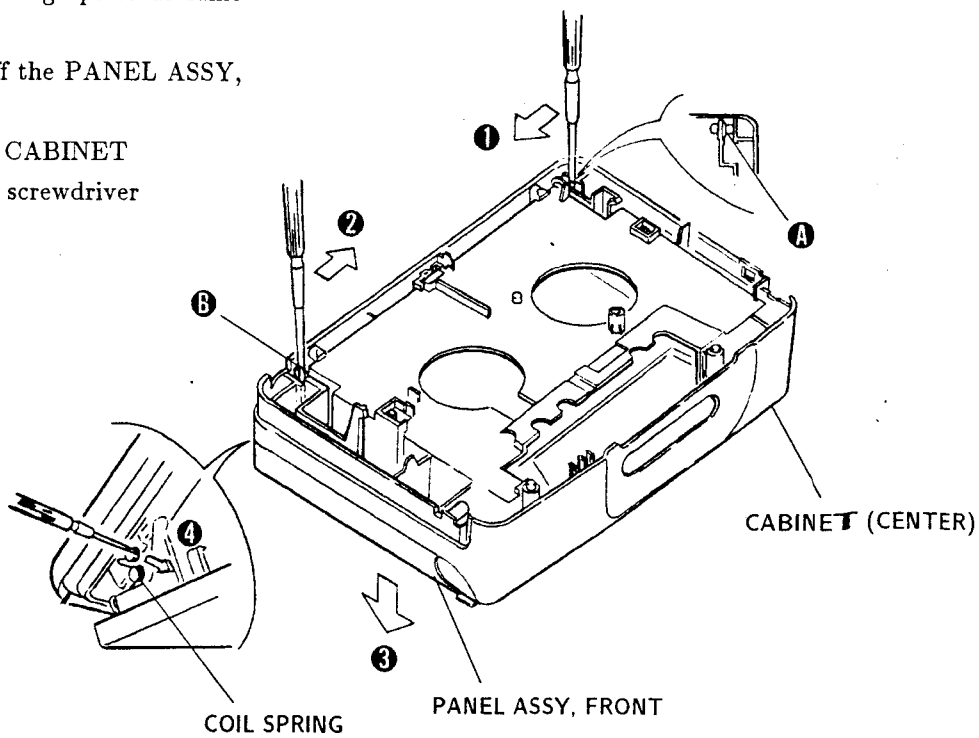

SECTION 3
MECHANICAL ADJUSTMENTS

PRECAUTION

1. Clean the following parts with a denatured-alcohol-moistened swab :
   playback head pinch roller
   capstan rubber belts
2. Demagnetize the playback head with a head demagnetizer.
3. Do not use a magnetized screwdriver for the adjustments.
4. After the adjustments, apply suitable locking compound to the parts adjusted.
5. The adjustments should be performed with the rated power supply voltage (2.5V) unless otherwise noted.

Torque Measurement

Mode	Torque meter	Meter reading
FWD	CQ-102D	20 - 45 g-cm (0.28 - 0.61 oz-inch)
FWD Back Tension		less than 2 g-cm (less than 0.03 oz-inch)
FF	CQ-210B	55-130g • cm (0.74 - 1.76 oz-inch)
REW	CQ-201B	55-150g • cm (0.74 - 2.03 oz-inch)

Tape Tension Measurement

Mode	Torque meter	Meter reading
FWD	CQ-403A	more than 90-cm (more than 1.22 oz-inch)

SECTION 4
ELECTRICAL ADJUSTMENTS

CASSETTE SECTION

Test Tape

Type	Signal	Used for
WS-48A	3 kHz, 0 dB	Tape Speed Adjustment

Tape Speed Adjustment

Procedure :

Mode : playback

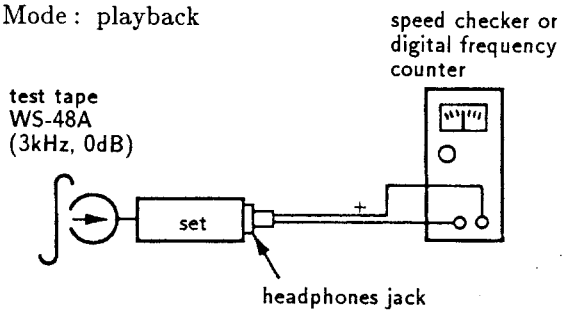

Specification :

digital frequency counter
2,960 – 2,980Hz

Frequency difference between the beginning and the end of the tape should be within ±1.5% (±45Hz).

Adjustment Location :

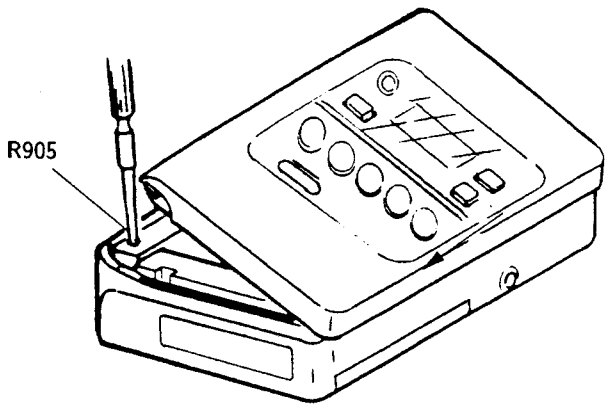

RADIO SECTION

Note : The set AEP, UK model needs to set Tuning Interval select switch S702 to 10KHz step before adjustment.
After adjustment, set it to 9KHz step.

• FM SECTION

Procedure :

TAPE/RADIO SELECT switch : RADIO
BAND switch : FM
VOLUME (R501, 502) : MAX

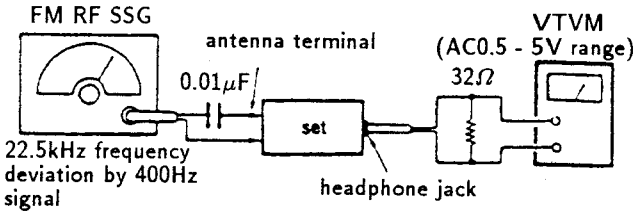

• Repeat the procedures in each adjustment several times, and the frequency coverage and tracking adjustments should be final done by the trimmer capacitors.

FM Tracking Adjustment

SG and set frequency	Adjustment part	Reading on VTVM
90.0MHz	L001	maximum
106.0MHz	L002	

• AM SECTION

TAPE/RADIO SELECT switch : RADIO
BAND switch : AM
VOLUME (RV501) : MAX

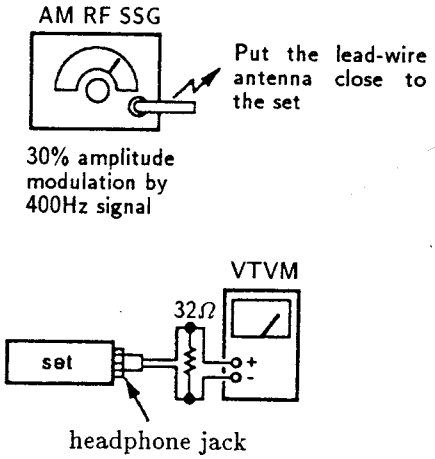

- Repeat the procedures in each adjustment several times , and the frequency coverage and tracking ajustments should be final done by the trimmer capacitors.

AM IF Alignment

SG and set frequency	Adjustment part	Reading on VTVM
450kHz (SG)	T102	maximum

AM Tracking Adjustment

SG and set frequency	Adjustment part	Reading on VTVM
620KHz	T103	maximum
1,400KHz	C106	

【MAIN BOARD】

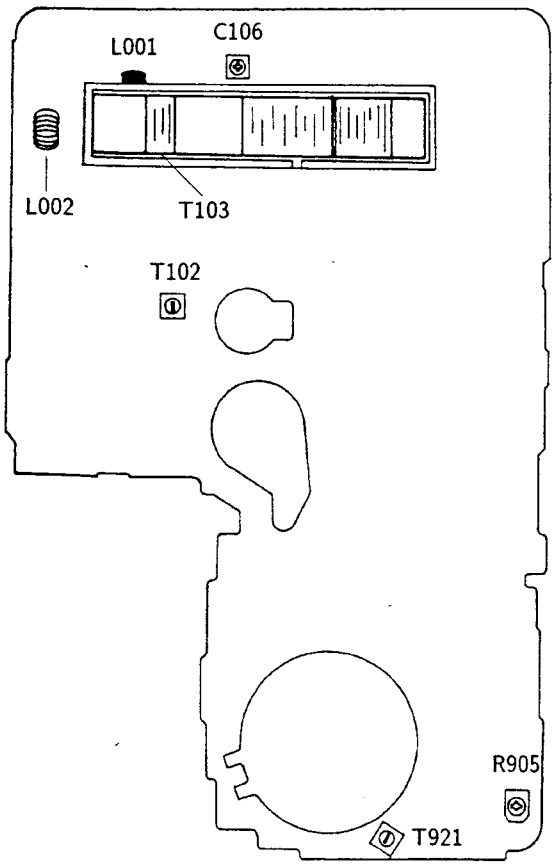

SECTION 5
DIAGRAMS

5-1. BLOCK DIAGRAM

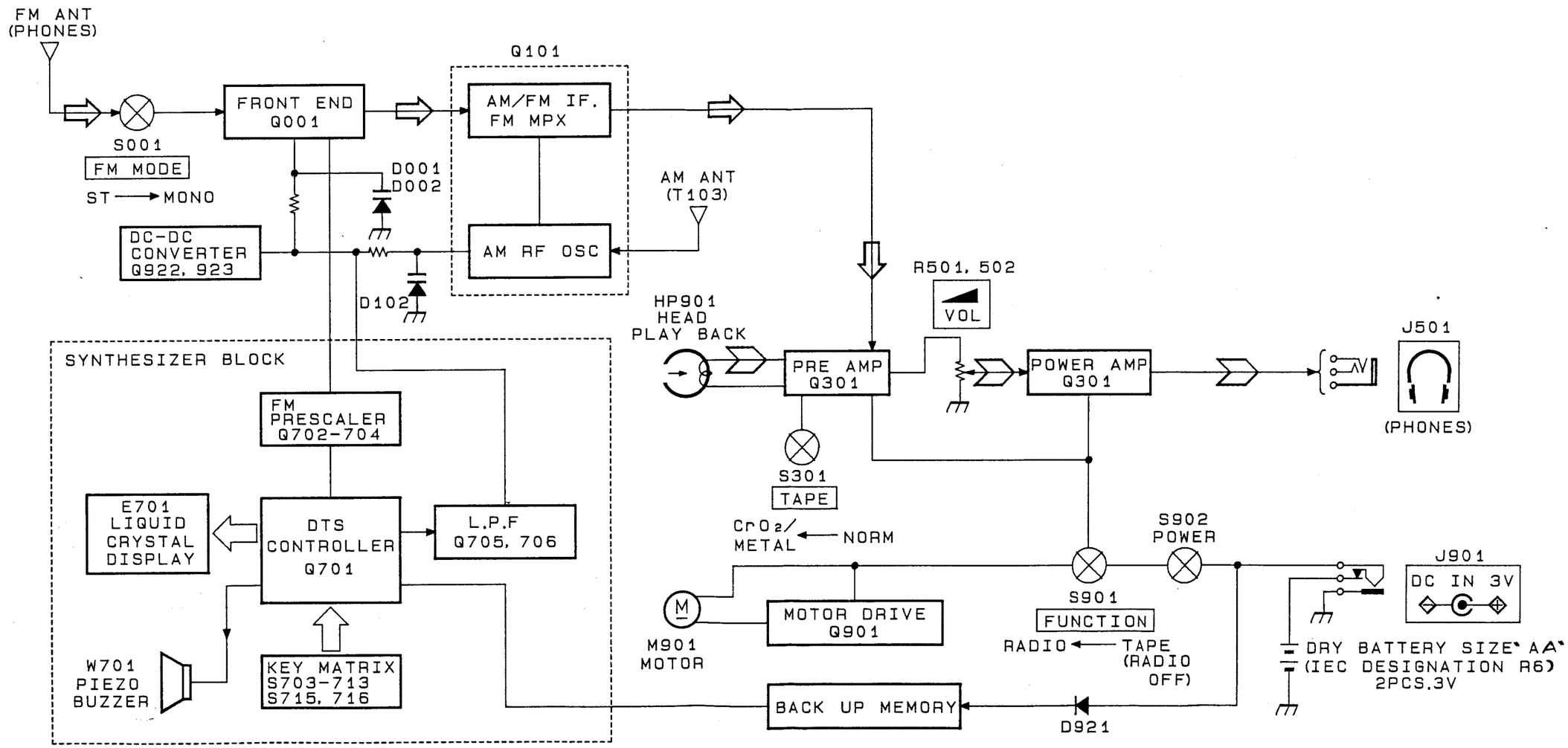

5-2. PIN FUNCTION OF IC

Q701 TC9308AF-022 (CONTROLLER)

Pin No.	Pin Name	I /O	Description
1 - 15	S3 - S17	O	Segment Signal output to LCD.
16	S18	O	Not used.
17, 18	S19, 20	O	Segment Signal output to LCD.
19	COM2	O	Common signal output to LCD.
20 - 22	K0 - K2	I	Key input.
23	NC	–	VDD
24	K3	I	Key input.
25 - 28	T0 - T3	O	Timing signal output for key matrix.
29, 30	I00, I01	O	Not used.
31	I02	O	Beep signal output.
32	I03	I	Stereo signal input. Stereo indicator in LCD light up by "L" Level.
33	IN0	I	AM channel plan signal input for 9kHz/10kHz. ("H" : 9kHz, "L" : 10kHz)
34	IN1	–	GND
35	IN2	–	VDD
36	IN3	–	GND
37	BUZR	O	Buzzer pulse output.
38	MUTE	O	Muting signal output.
39	OT0	O	Not used.
40	OT1	O	BAND1 output ("H" : AM, "L" : FM).
41	IFin	I	IF counter signal input.
42	DO1	O	Phase comparator signal output.
43	DO2	O	Not used.
44	AMin	I	AM programmable counter input.
45	PSC	O	Prescaler control signal output (1/15 : "L", 1/16 : "H").
46	FMin	I	FM programmable counter input.
47	GND	–	GND
48	$\overline{\text{INH}}$	I	Radio ON/OFF control signal input ("H" : Radio ON, "L" : Radio OFF).
49	TEST	I	Not used.
50	$\overline{\text{X'tal}}$	O	Crystal oscillator (75kHz) for reference signal connection port.
51	X'tal	I	Crystal oscillator (75kHz) for reference signal connection port.
52	$\overline{\text{INT}}$	I	System reset signal input ("L" : RESET).
53	VDD	–	Voltage supply to LCD drive.
54	VLCD	–	Voltage step up capacitor connection port.
55	C1	–	Voltage step up capacitor connection port.
56	C2	–	Voltage step up capacitor connection port.
57	C3	–	Stabilizer capacitor for LCD drive voltage connection port.
58	COM1	O	Common signal output to LCD.
59, 60	S1, S2	O	Segment signal output to LCD.

– SEGMENT –

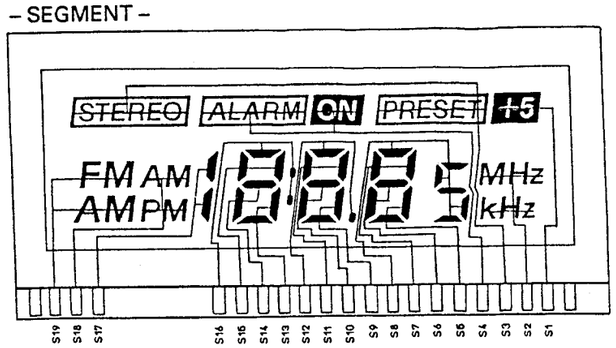

– COMMON –

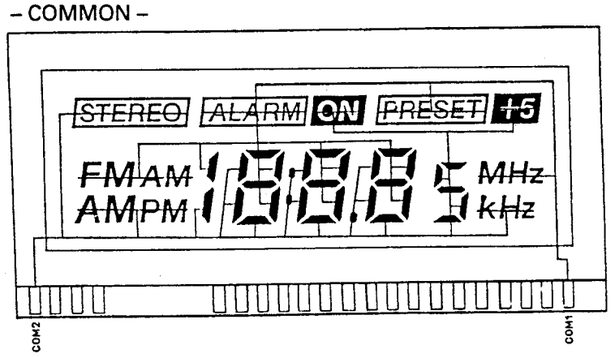

- **SEMICONDUCTOR LOCATION**

Ref. No.	LOCATION No.
D001	F-17
D002	G-17
D101	F-17
D102	F-16
D301	G-18
D921	F-14
D923	E-9
D924	G-14
Q001	G-16
Q101	E-16
Q102	F-14
Q201	D-15
Q301	C-15
Q701	E-3
Q702	F-2
Q703	F-2
Q704	G-2
Q705	E-1
Q706	E-1
Q901	C-9
Q922	E-9
Q923	E-9

- **SEMICONDUCTOR LEAD LAYOUTS**

TLR226

ISV149-B

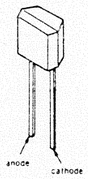

ISV191

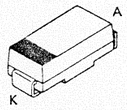

5-3. PRINTED WIRING BOARD

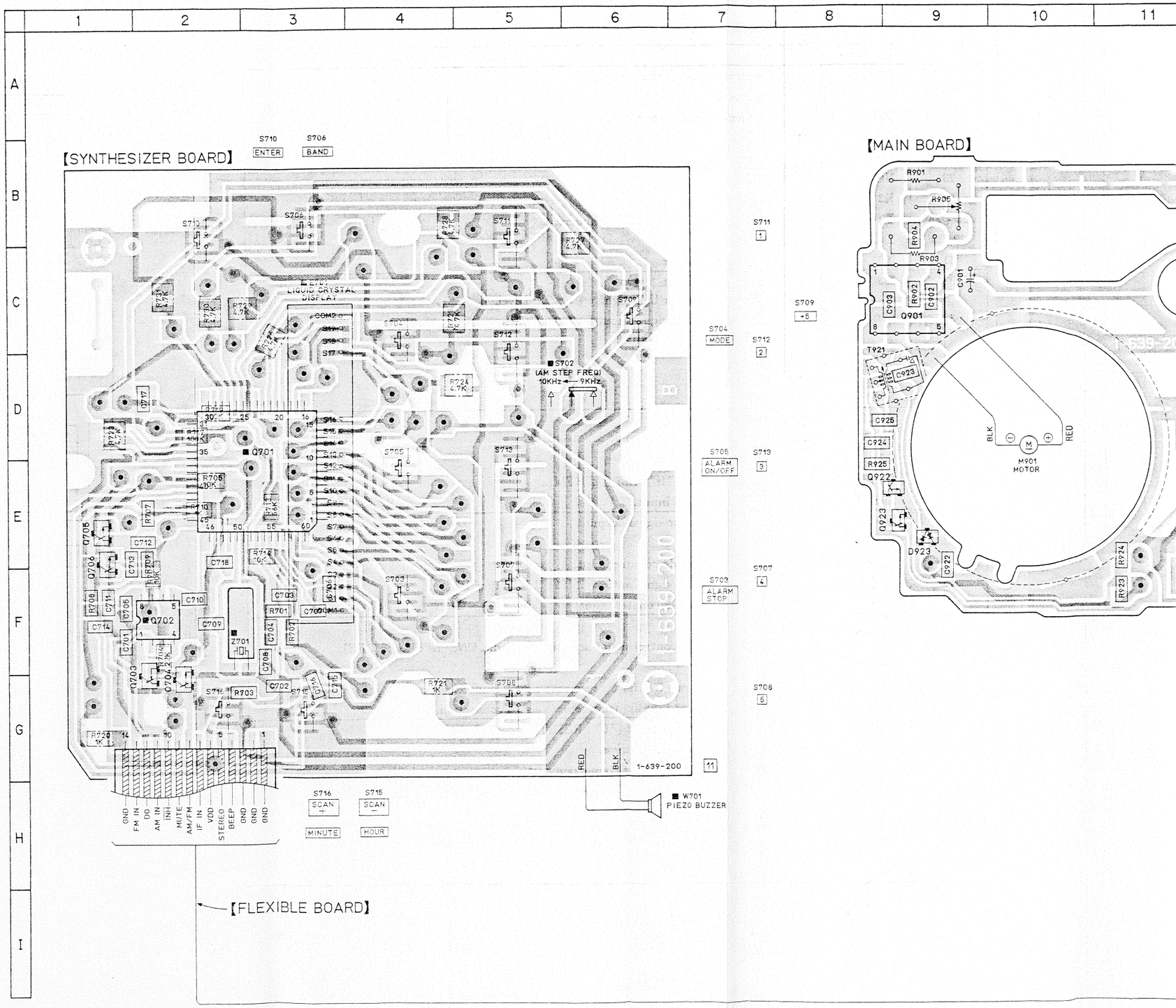

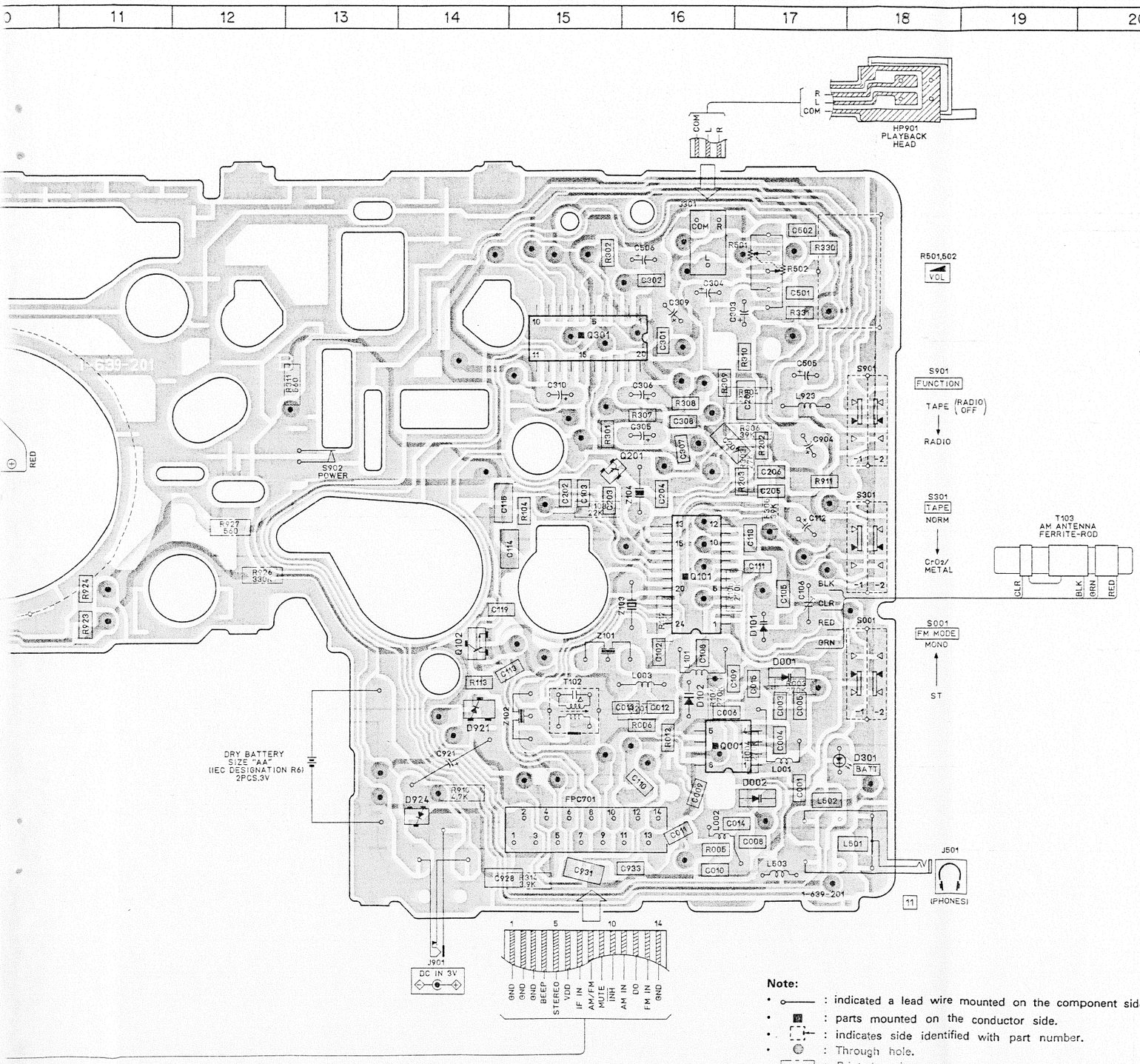

Note:

- ——— : indicated a lead wire mounted on the component side.
- ■ : parts mounted on the conductor side.
- : indicates side identified with part number.
- ◎ : Through hole.
- : Printed resistor.

Note:

- All capacitors are in μF unless otherwise noted. pF: μμF 50WV or less are not indicated except for electrolytics and tantalums.
- All resistors are in ohms, 1/4W or less unless otherwise noted.
- △ : internal component.

> The components identified by mark ⚠ or dotted line with mark ⚠ are critical for safety.
> Replace only with part number specified.

- B+ : B+Line.
- B− : B−Line.
- ▭ : adjustment for repair.
- Total current is measured with no cassette installed.
- Power voltage is dc 3V and fed with regulated dc power supply from external power voltage jack.
- Voltages are DC between measurement points and ground under no-signal (STOP) conditions.
- no make : TAPE PB
  ( ) : FM
  < > : AM
- Voltages are taken with a VOM (input impedance 10MΩ). Voltage variations may be noted due to normal production tolerances.
- Signal path
  ⇨ : CD ⇨ : PB

5-4. SCHEMATIC DIAGRAM

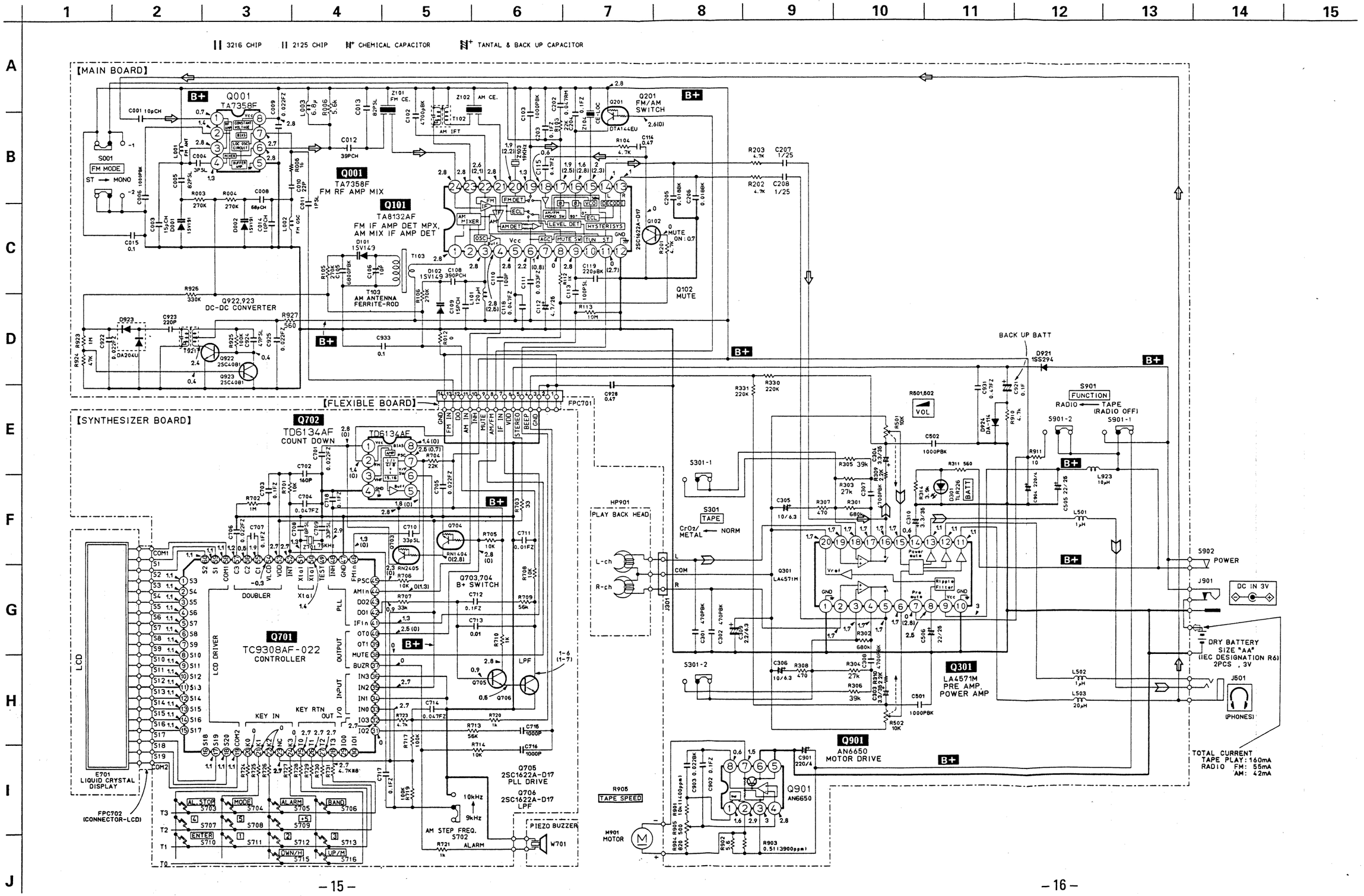

SECTION 6
EXPLODED VIEW

NOTE:
- -XX, -X mean standardized parts, so they may have some differences from the original one.
- The construction parts of an assembled part are indicated with a collation number in the remark column.
- Color Indication of Appearance Parts
  Example:
  KNOB,BALANCE(WHITE)...(RED)
  ↑ ↑
  Parts color Cabinet's color
- Items marked "*" are not stocked since they are seldom required for routine service. Some delay should be anticipated when ordering these items.
- The mechanical parts with no reference number in the exploded views are not supplied.
- Hardware(# mark) list is given in the last of this parts list.

The components identified by mark ⚠ or dotted line with mark ⚠ are critical for safety.
Replace only with part number specified.

6-1. CABINET SECTION

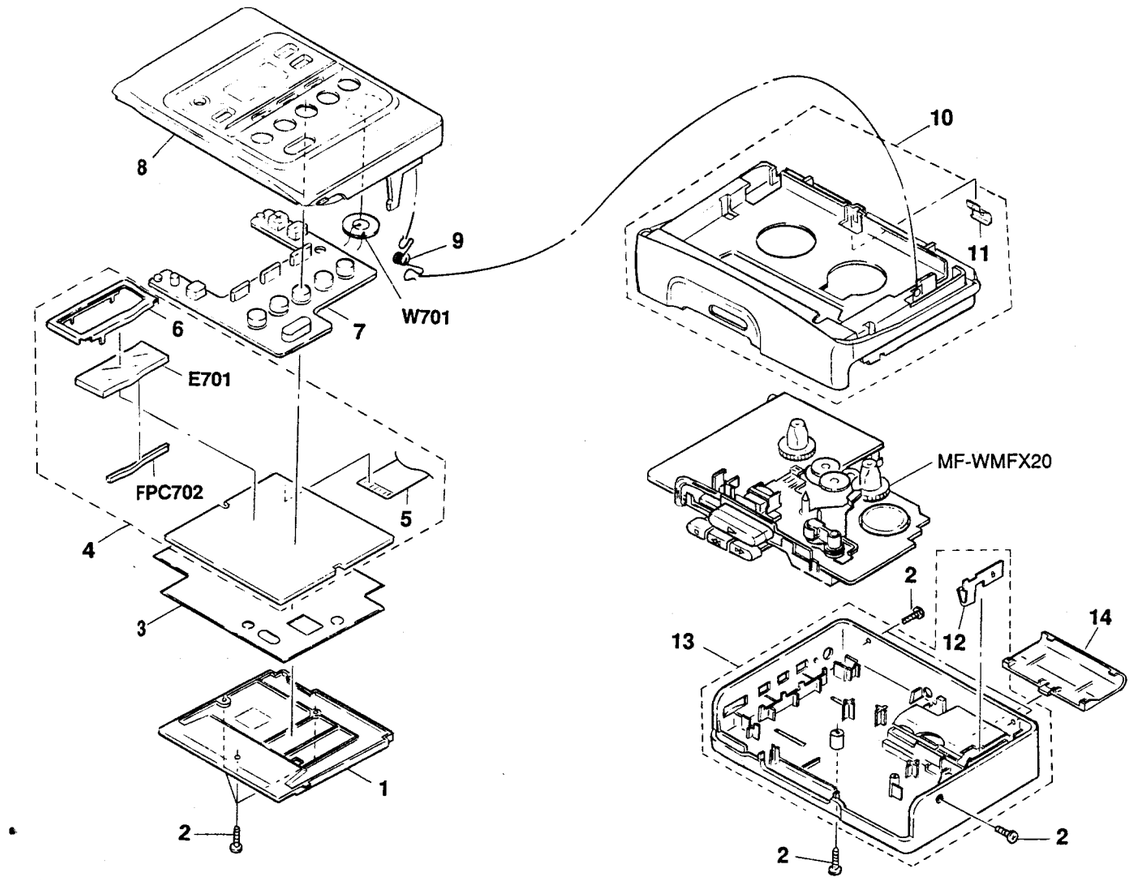

Ref. No.	Part No.	Description	Remark
1	3-369-601-01	CAVER, FRONT (REAR)	
2	3-394-925-01	SCREW, TAPPING, + HOLE	
3	3-369-596-01	FOIL, SHIELD	
4	A-3016-099-A	SYNTHESIZER BOARD, COMPLETE	
5	1-639-649-11	FLEXIBLE BOARD	
6	3-369-593-01	BRACKET, LCD	
7	3-369-600-01	BUTTON, SYNTHESIZER	
8	X-3363-235-1	PANEL ASSY, FRONT	
9	3-346-509-01	SPRING	
10	A-3041-547-A	CABINET (CENTER) ASSY	
11	3-346-516-01	SPRING	
12	3-334-057-01	TERMINAL BOARD, RELAY	
13	X-3363-236-1	CABINET (BACK) ASSY	
14	3-369-597-01	LID, BATTERY CASE	
E701	1-809-428-11	LCD	
FPC702	1-573-501-11	HOUSING, CONNECTOR (PC BOARD)	
W701	1-544-524-11	SPEAKER (20M)	

6-2. MECHANISM SECTION (MF-WMFX20)

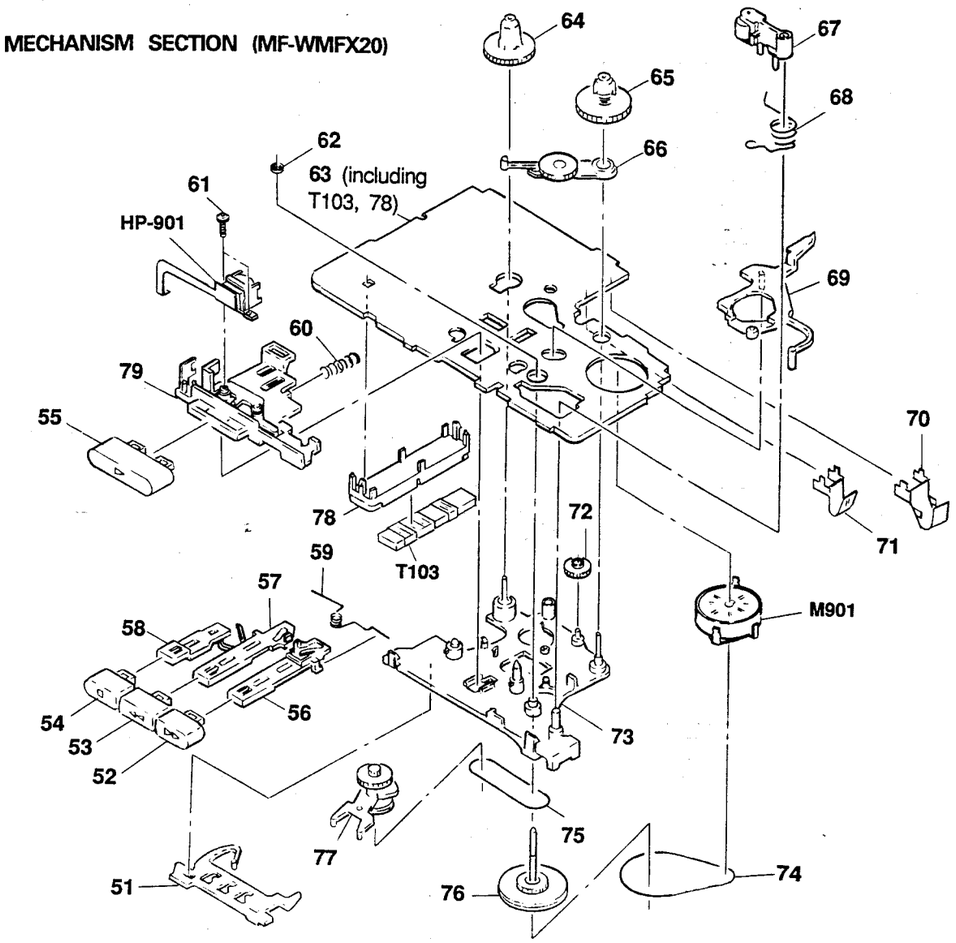

Ref. No.	Part No.	Description	Remark
51	3-346-522-01	PLATE, LOCK	
52	3-346-513-01	BUTTON (FF)	
53	3-346-514-01	BUTTON (REW)	
54	3-346-515-01	BUTTON (STOP)	
55	3-346-512-01	BUTTON (PLAY)	
56	3-346-526-01	LEVER (FF)	
57	3-346-527-01	LEVER (REW)	
58	3-346-528-01	LEVER (STOP)	
59	3-346-539-01	SPRING (FR)	
60	3-335-605-01	SPRING, COMPRESSION	
61	3-348-448-01	SCREW (HEAD)	
62	3-343-358-01	RING, RETAINING	
63	A-3016-100-A	PC BOARD ASSY (2), MAIN	
64	3-346-525-01	GEAR (S REEL)	
65	X-3346-502-1	TABLE ASSY, T REEL	
66	X-3346-504-1	GEAR ASSY, PLAY	
67	X-3334-005-1	PINCH ROLLER ASSY	
68	3-335-608-01	SPRING	
69	3-346-523-01	LEVER (SHUT-OFF)	
70	3-341-794-01	TERMINAL BOARD, MINUS	
71	3-347-109-01	TERMINAL BOARD, PLUS	
72	3-334-089-01	GEAR, FF	
73	X-3346-536-1	BASE ASSY, GUIDE	
74	3-335-603-11	RING (CAPSTAN)	
75	3-352-727-01	RING (MIDWAY)	
76	X-3346-746-1	WHEEL ASSY (ZDC), CAPSTAN	
77	X-3346-598-1	GEAR ASSY, MIDWAY	
78	* 3-369-631-01	HOLDER, ANTENNA	
79	* 3-346-541-01	LEVER (PLAY)	
HP901	1-543-634-11	HEAD, MAGNETIC (PLAYBACK)	
M901	1-541-650-21	MOTOR	
T103	1-402-499-11	ANTENNA, FERRITE-ROD	

SECTION 7
ELECTRICAL PARTS LIST

MAIN

NOTE:

The components identified by mark ⚠ or dotted line with mark ⚠ are critical for safety.
Replace only with part number specified.

When indicating parts by reference number, please include the board name.

- Due to standardization, replacements in the parts list may be different from the parts specified in the diagrams or the components used on the set.
- -XX, -X mean standardized parts, so they may have some difference from the original one.
- RESISTORS
  All resistors are in ohms
  METAL : Metal-film resistor
  METAL OXIDE : Metal Oxide-film resistor
  F : nonflammable

- Items marked "*" are not stocked since they are seldom required for routine service. Some delay should be anticipated when ordering these items.
- SEMICONDUCTORS
  In each case, u : μ, for example :
  uA...: μA..., uPA...: μPA...,
  uPB...: μPB..., uPC...: μPC...,
  uPD...: μPD...
- CAPACITORS
  uF : μF
- COILS
  uH : μH

Ref. No.	Part No.	Description			Remark
	A-3016-100-A	PC BOARD ASSY (2), MAIN			
		**********			
	3-341-794-01	TERMINAL BOARD, MINUS			
	3-347-109-01	TERMINAL BOARD, PLUS			
	* 3-369-631-01	HOLDER, ANTENNA			
		〈 CAPACITOR 〉			
C001	1-163-227-11	CERAMIC CHIP	10PF	5%	50V
C003	1-163-097-00	CERAMIC CHIP	15PF	5%	50V
C004	1-163-086-00	CERAMIC CHIP	3PF		50V
C005	1-163-115-00	CERAMIC CHIP	82PF	5%	50V
C006	1-163-141-00	CERAMIC CHIP	0.001uF	5%	50V
C008	1-163-113-00	CERAMIC CHIP	68PF	5%	50V
C009	1-163-037-11	CERAMIC CHIP	0.022uF	10%	25V
C010	1-163-235-11	CERAMIC CHIP	22PF	5%	50V
C011	1-163-083-00	CERAMIC CHIP	1PF		50V
C012	1-163-241-11	CERAMIC CHIP	39PF	5%	50V
C013	1-163-115-00	CERAMIC CHIP	82PF	5%	50V
C014	1-163-227-11	CERAMIC CHIP	10PF	5%	50V
C015	1-164-004-11	CERAMIC CHIP	0.1uF	10%	25V
C102	1-163-017-00	CERAMIC CHIP	0.0047uF	5%	50V
C103	1-163-141-00	CERAMIC CHIP	0.001uF	5%	50V
C105	1-163-019-00	CERAMIC CHIP	0.0068uF	10%	50V
C106	1-141-405-11	CAP, ADJ			
C108	1-163-131-00	CERAMIC CHIP	390PF	5%	50V
C109	1-163-097-00	CERAMIC CHIP	15PF	5%	50V
C110	1-163-117-00	CERAMIC CHIP	100PF	5%	50V
C111	1-163-989-11	CERAMIC CHIP	0.033uF	10%	25V
C112	1-126-163-11	ELECT	4.7uF	20%	50V
C113	1-163-117-00	CERAMIC CHIP	100PF	5%	50V
C114	1-162-610-00	CERAMIC CHIP	0.47uF		25V
C115	1-162-610-00	CERAMIC CHIP	0.47uF		25V
C118	1-163-809-11	CERAMIC CHIP	0.047uF	10%	25V
C119	1-163-001-11	CERAMIC CHIP	220PF	10%	50V
C202	1-163-035-00	CERAMIC CHIP	0.047uF		50V
C203	1-163-038-00	CERAMIC CHIP	0.1uF		25V
C204	1-163-038-00	CERAMIC CHIP	0.1uF		25V
C205	1-163-024-00	CERAMIC CHIP	0.018uF	10%	50V
C206	1-163-024-00	CERAMIC CHIP	0.018uF	10%	50V
C207	1-162-611-00	CERAMIC CHIP	1uF		25V
C208	1-162-611-00	CERAMIC CHIP	1uF		25V
C301	1-163-133-00	CERAMIC CHIP	470PF	5%	50V
C302	1-163-133-00	CERAMIC CHIP	470PF	5%	50V
C303	1-126-162-11	ELECT	3.3uF	20%	50V
C304	1-126-162-11	ELECT	3.3uF	20%	50V
C305	1-126-157-11	ELECT	10uF	20%	16V
C306	1-126-157-11	ELECT	10uF	20%	16V
C307	1-163-017-00	CERAMIC CHIP	0.0047uF	5%	50V
C308	1-163-017-00	CERAMIC CHIP	0.0047uF	5%	50V
C309		TANTALUM	2.2uF	10%	6.3V
C310	1-126-162-11	ELECT	3.3uF	20%	50V
C501	1-163-141-00	CERAMIC CHIP	0.001uF	5%	50V
C502	1-163-141-00	CERAMIC CHIP	0.001uF	5%	50V
C505	1-124-598-11	ELECT	22uF	20%	25V
C506	1-124-598-11	ELECT	22uF	20%	25V
C901	1-126-434-00	ELECT	220uF	20%	4V
C902	1-163-038-00	CERAMIC CHIP	0.1uF		25V
C903	1-163-037-11	CERAMIC CHIP	0.022uF	10%	25V
C904	1-124-434-00	ELECT	220uF	20%	4V
C921	1-125-682-11	CAP, DOUBLE LAYER 0.1F			
C922	1-163-037-11	CERAMIC CHIP	0.022uF	10%	25V
C923	1-163-001-11	CERAMIC CHIP	220PF	10%	50V
C924	1-163-109-00	CERAMIC CHIP	47PF	5%	50V
C925	1-163-037-11	CERAMIC CHIP	0.022uF	10%	25V
C928	1-162-610-00	CERAMIC CHIP	0.47uF		25V
C931	1-162-610-00	CERAMIC CHIP	0.47uF		25V
C933	1-164-004-11	CERAMIC CHIP	0.1uF	10%	25V
		〈 FPC 〉			
FPC701	1-573-502-11	HOUSING, CONNECTOR (PC BOARD)			
		〈 DIODE 〉			
D001	8-719-821-00	DIODE	1SV191		
D002	8-719-821-00	DIODE	1SV191		
D101	8-719-800-72	DIODE	1SV149-B		
D102	8-719-800-72	DIODE	1SV149-B		
D301	8-719-812-26	DIODE	TLR226 (BATT)		
D921	8-719-820-61	DIODE	1SS294		
D923	8-719-941-23	DIODE	DA204U		
D924		DIODE	D-DA114-T		
		〈 JACK 〉			
J301	* 1-565-288-11	HOUSING, CONNECTOR 3P			
J501	1-563-857-11	JACK, HEADPHONE (PHONES)			
J901	1-568-228-11	JACK, EXTERNAL POWER (DC IN3V)			
		〈 COIL 〉			
L001	1-428-214-11	COIL, AIR-CORE (FM ANT)			
L002	1-428-213-11	COIL, AIR-CORE (FM OSC)			
L003	1-424-398-11	COIL, CHOKE			

MAIN SYNTHESIZER

Ref. No.	Part No.	Description				Remark
L101	1-410-522-11	INDUCTOR	120uH			
L501	1-410-993-11	INDUCTOR, CHIP	1uH			
L502	1-410-993-11	INDUCTOR, CHIP	1uH			
L503	1-421-665-11	COIL				
L923	1-412-144-11	INDUCTOR, SMALL TYPE				
		(TRANSISTOR)				
Q001	8-759-206-37	IC TA7358F				
Q101	8-759-246-43	IC TA8132AF				
Q102	8-729-271-32	TRANSISTOR	2SC2713-L			
Q201	8-729-905-12	TRANSISTOR	DTA144EU			
Q301	8-759-821-89	IC LA4571M				
Q901	8-759-420-35	IC AN6650-LS				
Q922	8-729-905-36	TRANSISTOR	2SC4081-S			
Q923	8-729-905-36	TRANSISTOR	2SC4081-S			
		(RESISTOR)				
R005	1-216-005-00	METAL CHIP	15	5%	1/10W	
R006	1-216-067-00	METAL CHIP	5.6K	5%	1/10W	
R012	1-216-296-00	METAL CHIP	0	5%	1/8W	
R104	1-216-065-00	METAL CHIP	4.7K	5%	1/10W	
R113	1-218-179-11	METAL CHIP	10M	5%	1/10W	
R202	1-216-065-00	METAL CHIP	4.7K	5%	1/10W	
R203	1-216-065-00	METAL CHIP	4.7K	5%	1/10W	
R301	1-216-117-00	METAL CHIP	680K	5%	1/10W	
R302	1-216-117-00	METAL CHIP	680K	5%	1/10W	
R307	1-216-041-00	METAL CHIP	470	5%	1/10W	
R308	1-216-041-00	METAL CHIP	470	5%	1/10W	
R309	1-216-057-00	METAL CHIP	2.2K	5%	1/10W	
R310	1-216-057-00	METAL CHIP	2.2K	5%	1/10W	
R330	1-216-105-00	METAL CHIP	220K	5%	1/10W	
R331	1-216-105-00	METAL CHIP	220K	5%	1/10W	
R501, 502	1-238-072-11	RES, VAR, CABON	10K/10K	(VOL)		
R901	1-809-426-11	THERMISTOR, POSITIVE				
R902	1-216-309-00	METAL CHIP	5.6	5%	1/10W	
R903	1-809-427-11	THERMISTOR, POSITIVE				
R904	1-216-047-00	METAL CHIP	820	5%	1/10W	
R905	1-228-989-00	RES, ADJ, METAL	470	(TAPE SPEED)		
R911	1-216-001-00	METAL CHIP	10	5%	1/10W	
R923	1-216-121-00	METAL CHIP	1M	5%	1/10W	
R924	1-216-089-00	METAL CHIP	47K	5%	1/10W	
R925	1-216-097-00	METAL CHIP	100K	5%	1/10W	
		(SWITCH)				
S001	1-571-478-11	SWITCH, SLIDE (FM MODE)				
S301	1-571-478-11	SWITCH, SLIDE (TAPE)				
S901	1-571-478-11	SWITCH, SLIDE (FUNCTION)				
S902	1-571-621-21	SWITCH, LEAF (POWER)				
		(TRANSFORMER)				
T102	1-404-969-11	TRANSFORMER, IF				
T103	1-402-499-11	ANTENNA, FERRITE-ROD				
T921	1-466-569-11	TRANSFORMER UNIT, CONVERTER				
		(FILTER)				
Z101	1-567-389-11	FILTER, CERAMIC				
Z102	1-577-513-11	FILTER, CERAMIC				
Z103	1-577-091-11	OSCILLATOR, CRYSTAL (19kHz)				
Z104	1-578-776-11	DISCRIMINATOR, CERAMIC				

****

A-3016-099-A SYNTHESIZER BOARD, COMPLETE
****

Ref. No.	Part No.	Description				Remark
	1-639-649-11	FLEXIBLE BOARD				
*	3-369-593-01	BRACKET, LCD				
		(CAPACITOR)				
C701	1-163-037-11	CERAMIC CHIP	0.022uF	10%	25V	
C702	1-163-611-11	CERAMIC CHIP	160PF	5%	50V	
C703	1-163-038-00	CERAMIC CHIP	0.1uF		25V	
C704	1-163-809-11	CERAMIC CHIP	0.047uF	10%	25V	
C705	1-163-037-11	CERAMIC CHIP	0.022uF	10%	25V	
C706	1-163-037-11	CERAMIC CHIP	0.022uF	10%	25V	
C707	1-163-038-00	CERAMIC CHIP	0.1uF		25V	
C708	1-163-099-00	CERAMIC CHIP	18PF	5%	50V	
C709	1-163-105-00	CERAMIC CHIP	33PF	5%	50V	
C710	1-163-105-00	CERAMIC CHIP	33PF	5%	50V	
C711	1-164-232-11	CERAMIC CHIP	0.01uF		50V	
C712	1-163-038-00	CERAMIC CHIP	0.1uF		25V	
C713	1-164-232-11	CERAMIC CHIP	0.01uF		50V	
C714	1-163-809-11	CERAMIC CHIP	0.047uF	10%	25V	
C715	1-163-141-00	CERAMIC CHIP	0.001uF	5%	50V	
C716	1-163-141-00	CERAMIC CHIP	0.001uF	5%	50V	
C717	1-163-038-00	CERAMIC CHIP	0.1uF		25V	
C718	1-163-038-00	CERAMIC CHIP	0.1uF		25V	
		(BUZZER)				
E701	1-809-428-11	LCD				
		(FPC)				
FPC702	1-573-501-11	HOUSING, CONNECTOR (PC BOARD)				
		(TRANSISTOR)				
Q701	8-759-242-92	IC TC9308AF-022				
Q702	8-759-234-27	IC TD6134AF				
Q703	8-729-923-62	TRANSISTOR	DTA123JK			
Q704	8-729-207-58	TRANSISTOR	RN1404			
Q705	8-729-271-32	TRANSISTOR	2SC2713-L			
Q706	8-729-271-32	TRANSISTOR	2SC2713-L			
		(RESISTOR)				
R701	1-216-073-00	METAL CHIP	10K	5%	1/10W	
R702	1-216-121-00	METAL CHIP	1M	5%	1/10W	
R703	1-216-013-00	METAL CHIP	33	5%	1/10W	
R707	1-216-085-00	METAL CHIP	33K	5%	1/10W	
R708	1-216-073-00	METAL CHIP	10K	5%	1/10W	
R709	1-216-091-00	METAL CHIP	56K	5%	1/10W	

When indicating parts by reference number, please include the board name.

SYNTHESIZER

Ref. No.	Part No.	Description	Remark
		< SWITCH >	
S702	1-571-120-11	SWITCH, SLIDE (AM STEP FREQ.)	
		< CRYSTAL >	
Z701	1-577-464-11	VIBRATOR, CRYSTAL (75kHz)	

****

MISCELLANEOUS
****

W701	1-544-524-11	SPEAKER (20M)	
HP901	1-543-634-11	HEAD, MAGNETIC (PLAYBACK)	
M901	1-541-650-21	MOTOR	

****

ACCESSORY & PACKING MATERIAL
****

	3-346-518-01	CLIP, BELT	
*	3-367-986-01	CUSHIN (UPPER)	
*	3-367-987-01	CUSHIN (LOWER)	
	3-753-220-11	MANUAL, INSTRUCTION (ENGLISH/FRENCH/ SPANISH/PORTUGUSE)(AEP, Germany.E)	
	3-753-220-41	MANUAL, INSTRUCTION (GERMAN/DUTCH/ SWEDISH/ITALIAN)(AEP, Germany)	
	3-753-220-51	MANUAL, INSTRUCTION (ENGLISH)(UK)	
	8-953-400-95	HEADPHONE MDR-E552/K SET (E)	
	8-953-415-90	HEADPHONE MDR-14A SET (AEP, Germany, UK)	

When indicating parts by reference number, please include the board name.