TA-D905

SERVICE MANUAL

AEP Model
UK Model
E Model

This set is a integrated stereo Amplifier Block of the following models.
LBT-D905CD

SPECIFICATIONS

Continuous RMS power output
95 W + 95 W
(6 ohms, at 1 kHz, 5% THD)
80 W + 80 W
(6 ohms, at 1 kHz, DIN)
Music power output 160 W + 160 W
(6 ohms, at 1 kHz)

Audio section

Input

INPUT	Jack type	Sensitivity	Impedance
PHONO	Phono	2.8 mV	47 kohms
TUNER	Phono	220 mV	47 kohms
TAPE	Phono	220 mV	47 kohms
VIDEO1	Phono	220 mV	47 kohms
VIDEO2	Phono	220 mV	47 kohms
VIDEO3	Phono	220 mV	47 kohms
SDP	Phono	200 mV	47 kohms
MIC	Phono	0.7 mV	10 kohms

* At 80 W + 80 W output
With SDP IN and SDP OUT short-circuited

Output

OUTPUT	Jack type	Sensitivity	Impedance
TAPE	Phono	200 mV	2 kohms
DAT	Phono	200 mV	2 kohms
VIDEO1	Phono	200 mV	2 kohms
VIDEO2	Phono	200 mV	2 kohms
SDP	Phono	200 mV	2 kohms
SURROUND SPEAKER	Accepts speakers of 16 ohms		
HEADPHONES	Accepts headphones of 8 ohms or more		

Video section

Inputs VIDEO1, VIDEO2, VIDEO3,
DBS: 1 Vp-p, 75 ohms
Outputs VIDEO1, VIDEO2,
MONITOR: 1 Vp-p, 75 ohms

Frequency response

PHONO	RIAA curve ±0.5 dB
VIDEO1, VIDEO2, VIDEO3, SDP, TUNER, TAPE	10 Hz to 50 kHz $^{+0}_{-3}$ dB
MIC	100 Hz to 10 kHz $^{+0}_{-6}$ dB

General

Power requirements	120/220/240, 50/60Hz (E, Saudi Arabia models) 240V AC, 50/60Hz (UK model) 220 – 230V AC, 50/60Hz (AEP, Germany, Italian models)
Power consumption	230W (E, Saudi Arabia models) 400W (UK model) 200W (AEP, Germany, Italian models)
AC outlet	1 unswitched, 100 W max.
Dimensions	Approx. 355 × 132.5 × 325 mm (w/h/d) incl. projecting parts and controls
Weight	Approx. 6.9 kg

Design and specifications subject to change without notice.

www.manualscenter.com

INTEGRATED STEREO AMPLIFIER

SONY®

MICROFILM

TABLE OF CONTENTS

Section	Title	Page
1. GENERAL		3
2. DIAGRAMS		
2-1.	Block Diagram	9
2-2.	IC Description	11
2-3.	Circuit Boards Location	12
2-4.	IC Block Diagrams	13
2-5.	Semiconductor Lead Layouts	16
2-6.	Printed Wiring Board – Main –	17
2-7.	Schematic Diagram – Main –	21
2-8.	Schematic Diagram – Panel –	25
2-9.	Printed Wiring Board – Panel –	29
3. EXPLODED VIEWS		
3-1.	Overall Section 1	31
3-2.	Overall Section 2	32
4. ELECTRICAL PARTS LIST		33

MODEL IDENTIFICATION

– Specification Label –

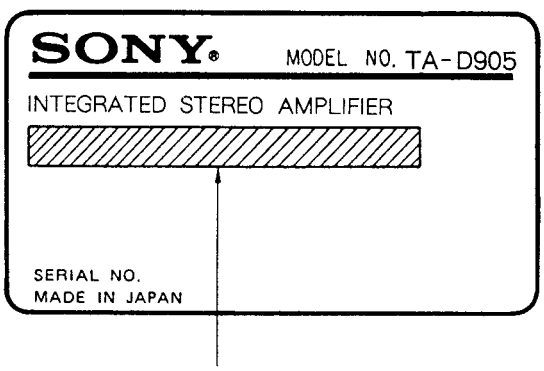

UK model : AC240V ∿ 50/60Hz
AEP, Germany, Italian models : AC220 – 230V ∿ 50/60Hz
E, Saudi Arabia models : AC120/220/240 ∿ 50/60Hz

SAFETY-RELATED COMPONENT WARNING!!

COMPONENTS IDENTIFIED BY MARK ⚠ OR DOTTED LINE WITH MARK ⚠ ON THE SCHEMATIC DIAGRAMS AND IN THE PARTS LIST ARE CRITICAL TO SAFE OPERATION. REPLACE THESE COMPONENTS WITH SONY PARTS WHOSE PART NUMBERS APPEAR AS SHOWN IN THIS MANUAL OR IN SUPPLEMENTS PUBLISHED BY SONY.

www.manualscenter.com

Installation

7 Connecting a DAT deck
Connexion d'une platine DAT munie d'une sortie numérique optique
Conexión de un deck de cinta audiodigital
Ligação de um gravador DAT

A DAT deck can be connected in 3 ways. When connecting a DAT, use only one of the following connections.

Une platine DAT peut être connectée de 3 manières différentes, mais les connexions doivent être effectuées selon un des systèmes suivant uniquement.

Usted podrá conectar un deck de cinta audiodigital de 3 formas. Cuando lo conecte, emplee solamente una de estas formas.

A ligação de um gravador DAT pode ser realizada de três maneiras. Utilize um dos seguintes modos para a ligação.

A

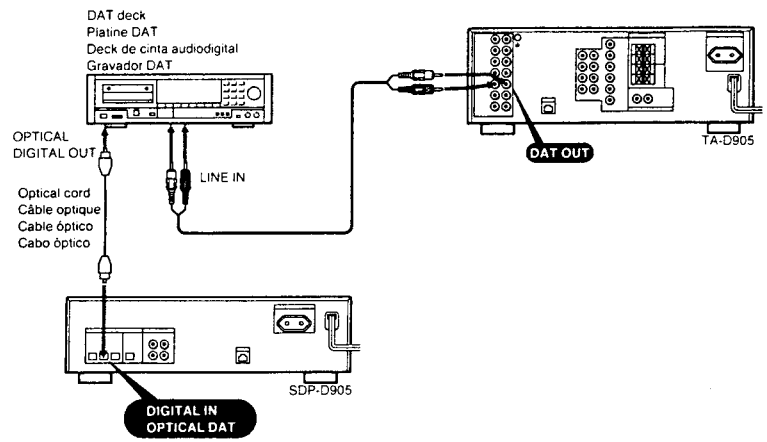

B

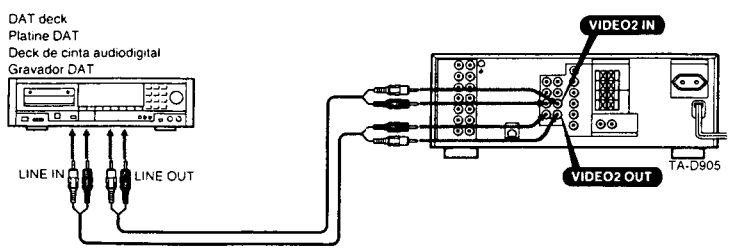

*When playing back a DAT tape, select VEDEO2 with the AUDIO FUNCTION selector
*Lors de la lecture d'une cassette DAT, sélectionner VEDEO2 avec le sélecteur AUDIO FUNCTION.
*Para reproducir un cassete de cinta audio digital, elija VEDEO2 con el selector AUDIO FUNCTION.
*Quando da reprodução de uma cassete no gravador DAT, posicione o selector AUDIO FUNCTION em VIDEO2.

C

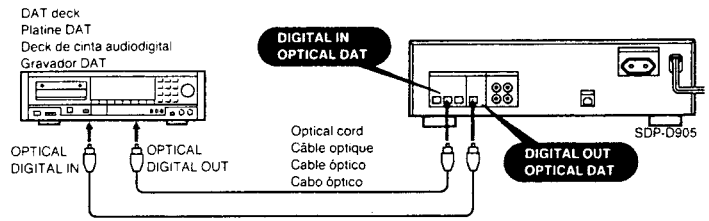

Feature of these above connections
- Is the digital recording possible?
  Yes : C No : A, B

C connection enables you to record digital sound from a CD or DBS tuner connected with an optical cord without digital-analog conversion.
Thus, this connection allows you to have your recording free of any deterioration in sound quality resulting from digital-analog conversion.

- Can the digital surround processor effects be recorded?
  Yes : A, B No : C

Caractéristique des connexions indiquées ci-dessus
- L'enregistrement numérique est-il possible?
  Oui : C Non : A, B

La connexion C permet d'enregistrer le son numérique d'un lecteur de CD ou d'un tuner DBS raccordés par un câble optique sans avoir à faire la conversion numérique-analogique.
Aussi, cette connexion vous permet-elle d'effectuer des enregistrements ne souffrant pas de détériorisations provenant de la conversion du signal numérique en signal analogique.

- Les effets créés par le processeur numérique d'ambiance peuvent-ils être enregistrés?
  Oui : A, B Non : C

Particularidades de estas conexiones
- ¿Es posible la grabación digital?
  Si : C No : A y B

La conexión C le permitirá grabar sonido digital de un reproductor de discos compactos o de un receptor de emisiones vía satélite conectado con un cable óptico sin conversión digital-analógica. Por ello, esta conexión hará que pueda grabar sin que la cualidad del sonido se vea deteriorada debido a la conversión digital-analógica.

- ¿Es posible grabar los efectos del procesador de sonido perimétrico digital?
  Si : A, B No : C

Características das ligações acima
- É possível realizar gravações digitais?
  Sim : C Não : A, B

A ligação C permite a gravação dos sinais digitais de um disco compacto ou sintonizador de transmissões via satélite ligado através de um cabo óptico, sem conversão digital-analógica.
Esta ligação possibilita desta forma a obtenção de gravações livres de qualquer degradação na qualidade sonora resultante da conversão digital-analógica.

- Os efeitos do processador digital de efeitos perimétricos podem ser gravados?
  Sim : A, B Não : C

Installation

1 Connecting a tuner
Connexion d'une tuner
Conexión de un sintonizador
Ligação de um sintonizador

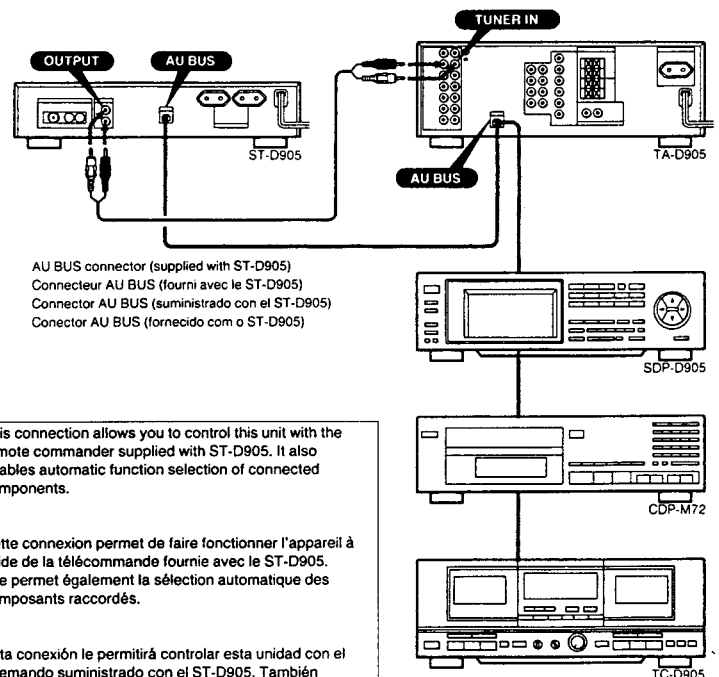

AU BUS connector (supplied with ST-D905)
Connecteur AU BUS (fourni avec le ST-D905)
Connector AU BUS (suministrado con el ST-D905)
Conector AU BUS (fornecido com o ST-D905)

This connection allows you to control this unit with the remote commander supplied with ST-D905. It also enables automatic function selection of connected components.

Cette connexion permet de faire fonctionner l'appareil à l'aide de la télécommande fournie avec le ST-D905. Elle permet également la sélection automatique des composants raccordés.

Esta conexión le permitirá controlar esta unidad con el telemando suministrado con el ST-D905. También permite la selección automática de función de los componentes conectados.

Esta ligação permite o controle do aparelho com o telecomando fornecido com o ST-D905. Esta ligação permite também a selecção automática de funções nos componentes ligados.

2 Connecting a double cassette deck
Connexion d'un double magnétophone
Conexión de un deck de doble cassette
Ligação de um gravador cassete duplo

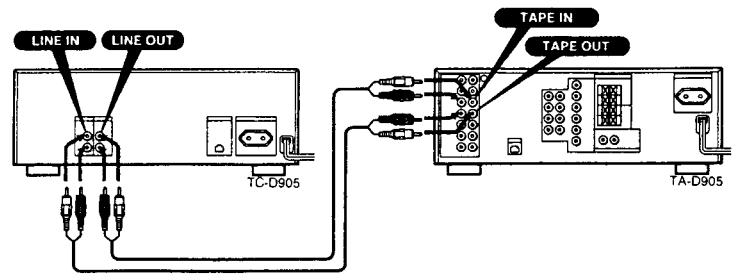

3 Connecting a digital surround processor
Connexion d'un processeur numérique d'ambiance
Conexión de un procesador de sonido perimétrico digital
Ligação de um processador digital de efeitos perimétricos

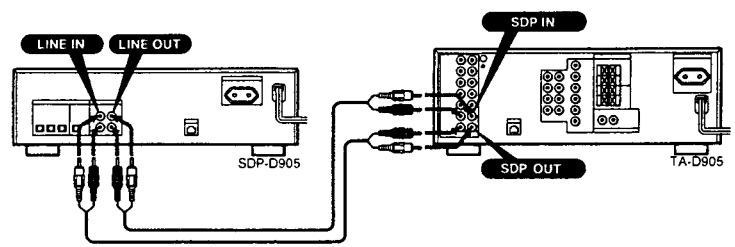

Installation

Notes on Connection

- Connect the AC power cord last. Make sure power is off.
- Cord plugs and jacks are color coded. Red plugs and jacks are for right channel (R) and white ones for left channel (L).
- Fully insert cable connectors into jacks. Loose connections may cause hum or noise.
- No audio or video connecting cords are supplied with this unit. They are supplied with other components.

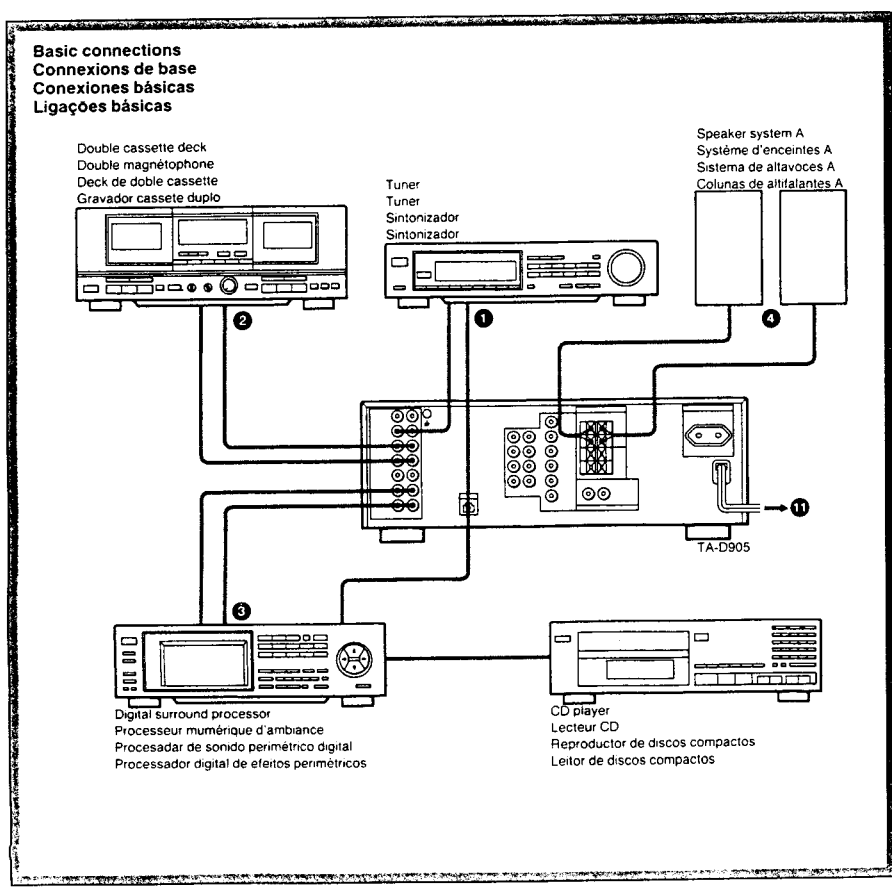

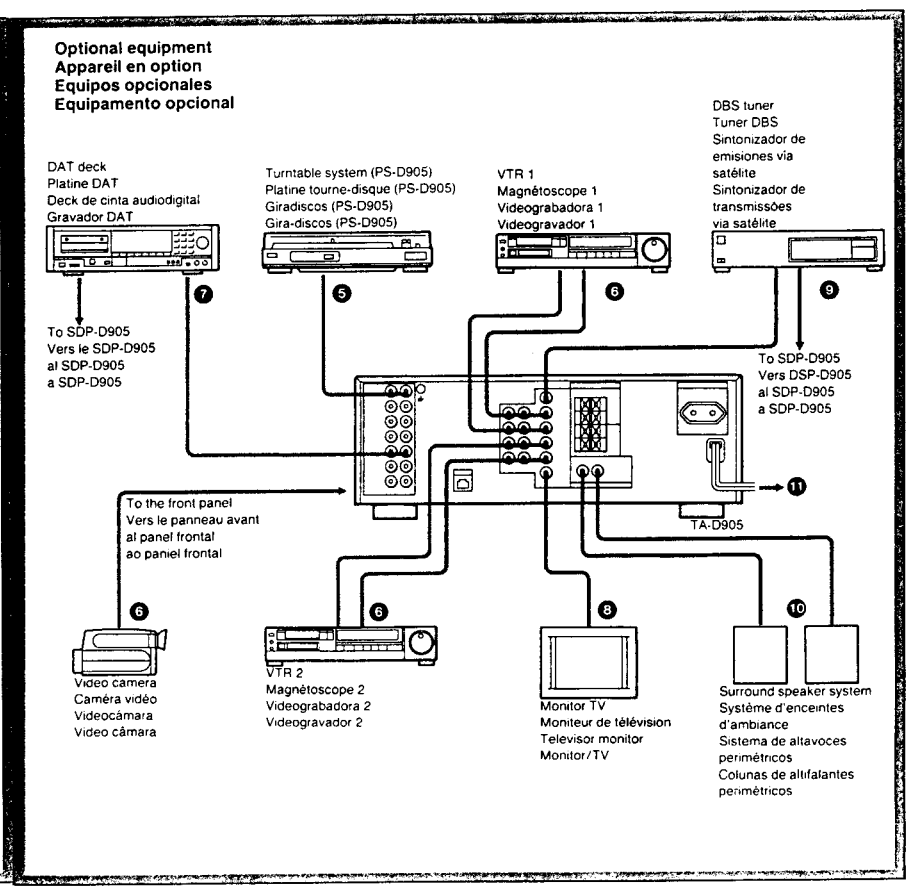

www.manualscenter.com

SECTION 1
GENERAL

This section is extracted from instruction manual.

Location of Controls

Front Panel — Panneau frontal

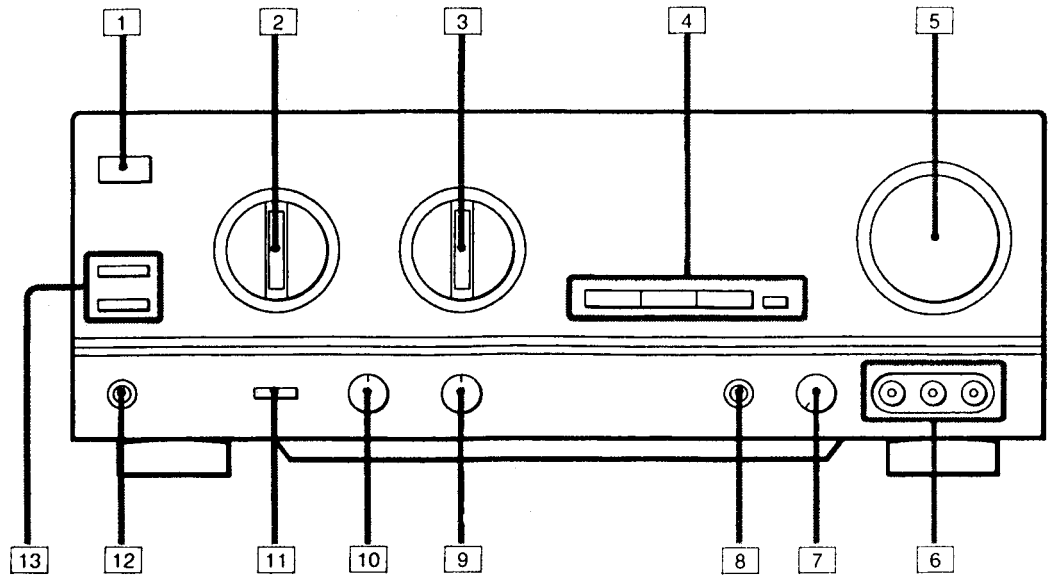

Refer to the pages indicated in ● for details.

Amplifier

1 POWER switch
2 VIDEO FUNCTION selector ㉖
3 AUDIO FUNCTION selector ⑯
4 Buttons for storing sound quality settings (PROGRAM FUNCTION) ㉓
5 VOLUME control ⑱
6 VIDEO3 input jacks
7 MIC LEVEL control ㉘, ㉙
8 MIC jack ㉘
9 BALANCE control ⑱
10 DBFB LEVEL control ⑳
11 DBFB button ⑳
12 HEADPHONES jack ⑳
13 SPEAKERS A/B selectors ⑳

Installation

⑧ Connecting a monitor TV
Connexion d'un moniteur de télévision
Conexión de un televisor monitor
Ligação de um monitor/TV

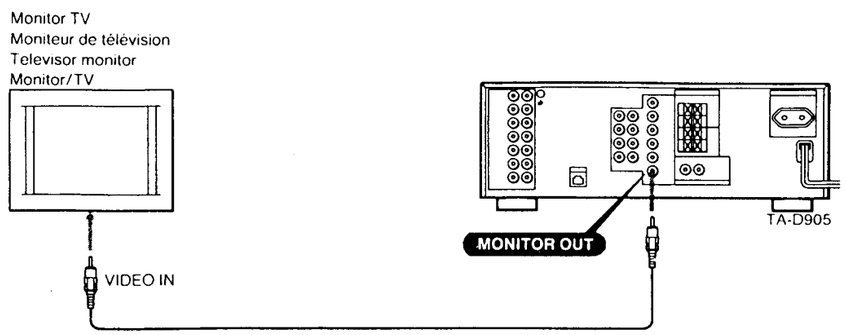

⑨ Connecting a DBS tuner or a Laser Disc player
Connexion d'un tuner DBS ou d'un lecteur de LD
Conexión de un sintonizador de emisiones via satélite o de un reproductor de discos láser
Ligação de um sintonizador de transmissões via satélite ou leitor de disco laser «Laser Disc»

ⓐ For the equipment without an optical output/Pour appareil sans sortie optique/Para un equipo desprovisto de salida óptica/Equipamentos desprovidos de saída óptica

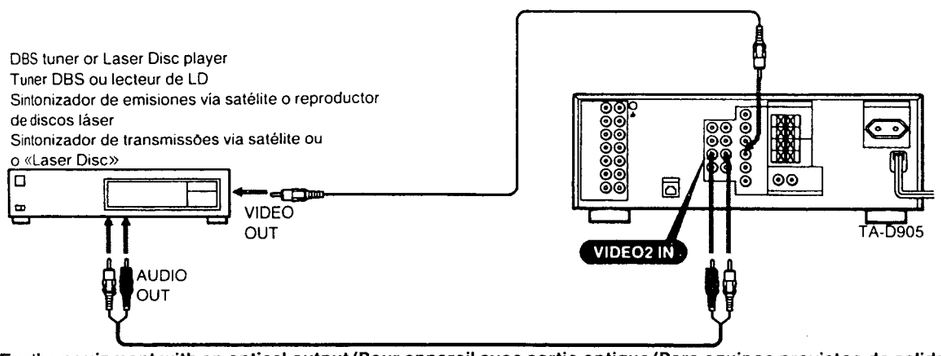

ⓑ For the equipment with an optical output/Pour appareil avec sortie optique/Para equipos provistos de salida óptica/Equipamentos providos de saída óptica

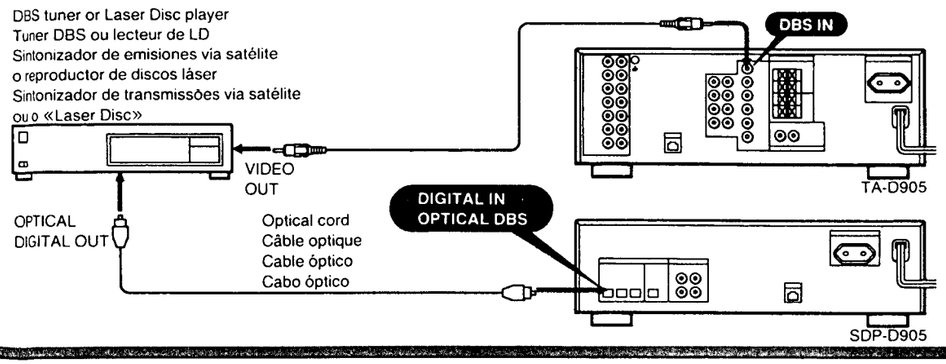

Adjusting the Sound

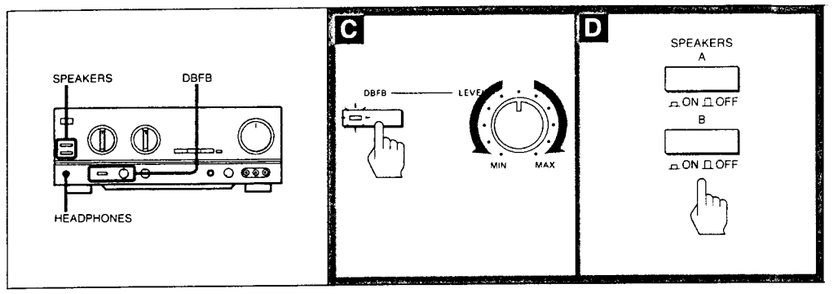

Reinforcing the Bass C

1 Press the DBFB button so that the indicator lights up.
2 Adjust the DBFB LEVEL control.

Selecting Speaker System D

This amplifier provides for two speaker systems – system A and system B – which can be selected separately or simultaneously using the SPEAKERS selectors.

To drive speaker system A: Depress A.
To drive speaker system B: Depress B.
To drive both speaker systems A and B: Depress both A and B.
For private listening: Connect a pair of headphones to HEADPHONES and set both selectors to OFF (ON).

- Speaker systems A and B are series connected. No sound can be heard if both SPEAKERS selectors are pressed when only one speaker system is connected.

Storing a Desired Sound Setting

You can store and recall 3 different combinations of program source, volume level, and sound quality.
Store the settings in the PROGRAM FUNCTION buttons 1 to 3 on the amplifier.

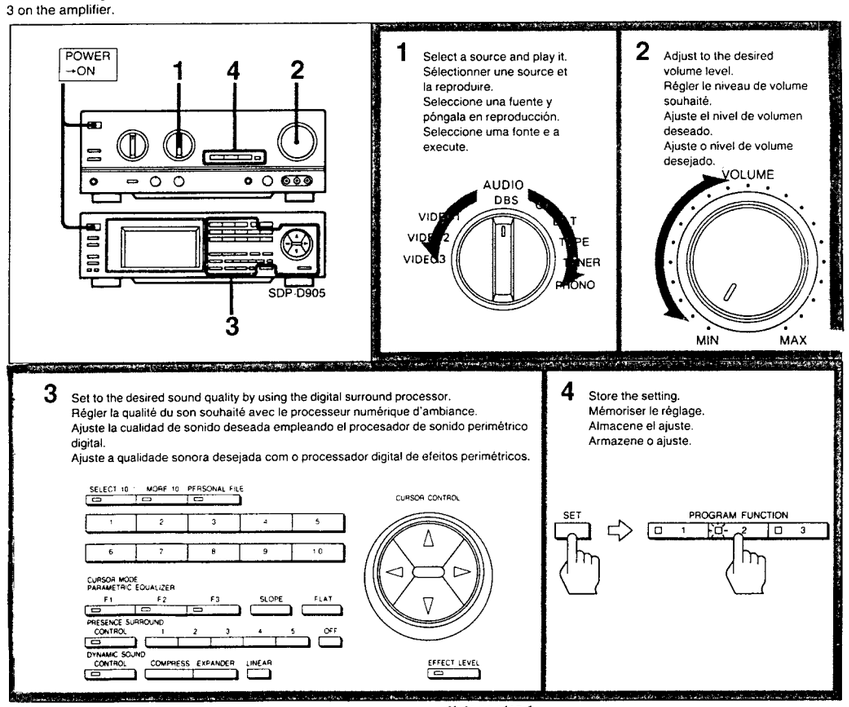

Recalling a Sound Setting

Prepare the source and press the button for the desired setting.

Note on step 1
If you select the tuner ST-D905 as a source, the band and frequency of the station tuned in will be stored.

Notes on steps 2
- *Adjust the VOLUME control within such a range that the volume level will not exceed half of the maximum volume.*
- *Be sure to set the VOLUME control to the position more than the second point from the minimum level. Otherwise, the stored setting will be recognized as the zero level.*

www.manualscenter.com

SECTION 2
DIAGRAMS

2-1. BLOCK DIAGRAM

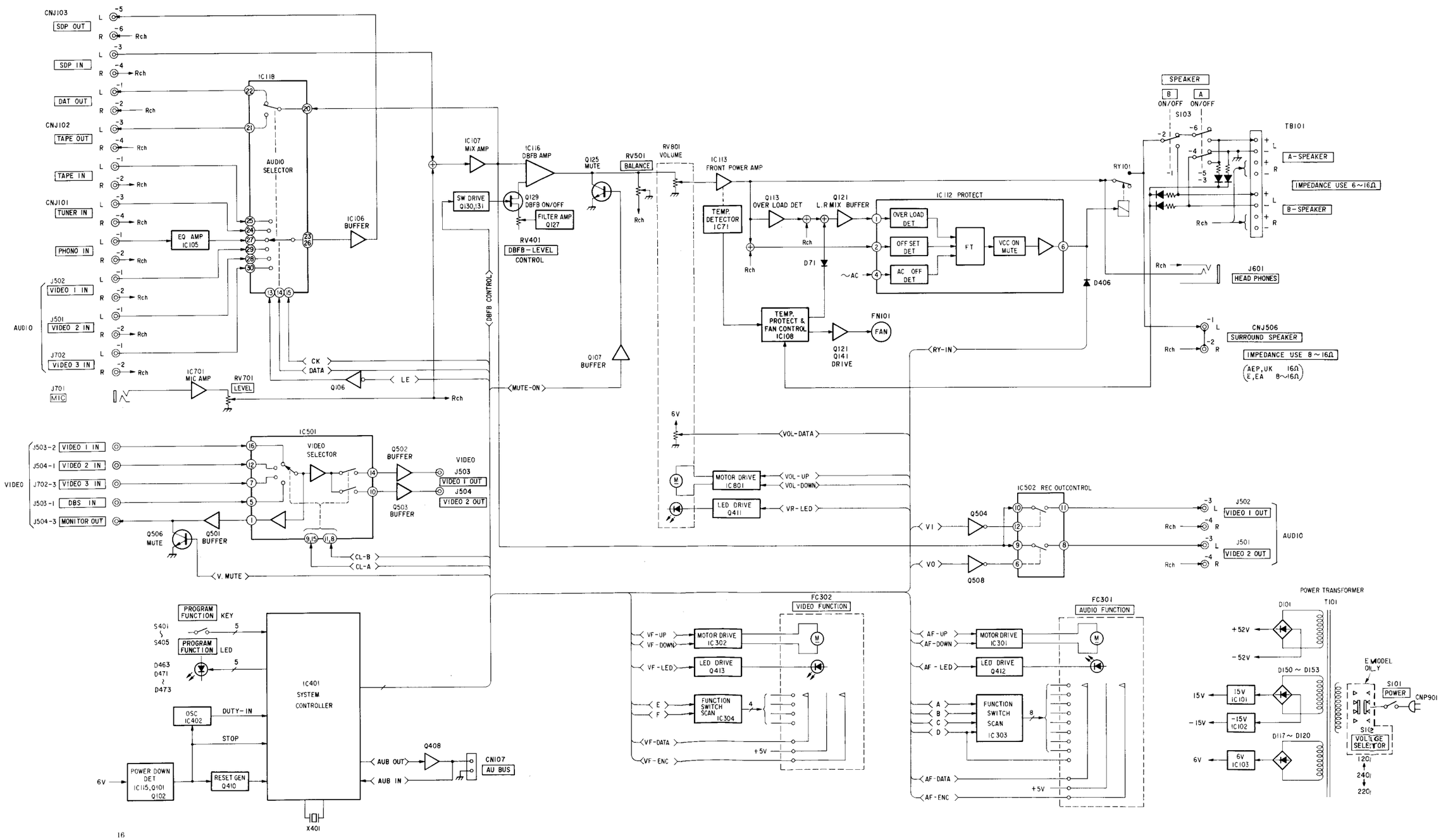

16

www.manualscenter.com

2-2. IC DESCRIPTION

IC401 System Controlle (μ PD75106CW-190)

Pin No.	Pin Name	I/O	Description
1	V-ENC	I	Select edge input of video function switch (FC302).
2	A-ENC	I	Select edge input of audio function switch (FC301).
3	DUTY-IN	I	Pulse input (sync T = approx. 20 mS) of function motor control.
4	AUB-IN	I	Audio BUS input.
5	NC	—	
6	NC	—	
7	RY-IN	I	Relay (RY101) ON/OFF detect.
8	VOL A/D	I	Position detect input (analog input) of volume (RV801).
9	TST	—	
10	TST	—	
11	AUB-OUT	O	Audio BUS output.
12	NC	—	
13	NC	—	
14	NC	—	
15	SI	—	
16	V-LOC	I	Position data scan input of video function switch (FC302).
17	A-LOC	I	Position data scan input of audio function switch (FC301).
18	AC-CUT	I	Power cut detect input.
19	A-MUTE	O	Mute signal output (audio).
20	V-MUTE	O	Mute signal output (video).
21	NC	—	
22	REAR-SP	O	Rear speaker relay (RY901) ON/OFF control output.
23	CL-B	O	Video image input/output select control output (IC501).
24	CL-A	O	
25	V1	O	Video audio input/output select control output (IC502).
26	V0	O	
27	SW-OFF	O	Super woofer ON/OFF control output.
28	CE	O	Audio input/output select (IC118) data latch output.
29	DI	O	Audio input/output select (IC118) serial data output.
30	CL	O	Audio input/output select (IC118) data clock output.
31	NC	—	
32	VDD	—	Power terminal (+5V).

Pin No.	Pin Name	I/O	Description
33	AF-LED	O	Audio function LED control output.
34	REAR-K	I	Rear speaker ON/OFF switch (S407) input.
35	SW-K	I	Super woofer ON/OFF switch (S406) input.
36	DBFB-K	I	DBFB-K ON/OFF switch (S405) input.
37	PST1-K	I	PRESET 1 switch (S402) input.
38	PST2-K	I	PRESET 2 switch (S403) input.
39	PST-3K	I	PRESET 3 switch (S404) input.
40	SET-K	I	SET switch (S401) input.
41	A-SCN-3	O	Position data scan output of audio function switch.
42	A-SCN-2	O	
43	A-SCN-1	O	
44	A-SCN-0	O	
45	$\overline{\text{RESET}}$	I	System reset input.
46	X0	O	Ceramic oscillator generator circuit (4.19 MHz).
47	X1	I	
48	VOL-DWN	O	DOWN signal output of volume motor (RV801).
49	VOL-UP	O	UP signal output of volume motor (RV801).
50	V-SCAN-1	O	Position data scan output of video function switch.
51	V-SCAN-0	O	
52	VF-LED	O	Video function LED control output.
53	PST1-L	O	PRESET LED (D471) control output.
54	PST2-L	O	PRESET LED (D472) control output.
55	PST3-L	O	PRESET LED (D473) control output.
56	AF-DWN	O	Motor DOWN signal output of audio function switch (FC301).
57	AF-UP	O	Motor UP signal output of audio function switch (FC301).
58	VF-DWN	O	Motor DOWN signal output of video function switch (FC302).
59	VF-UP	O	Motor UP signal output of video function switch (FC302).
60	REAR-L	O	Rear speaker LED (D461) control output.
61	SW-L	O	Super woofer LED (D462) control output.
62	VOL-L	O	Volume LED control output.
63	DBFB-L	O	DBFB LED (D463) control output.
64	VSS	—	GN

2-3. CIRCUIT BOARDS LOCATION

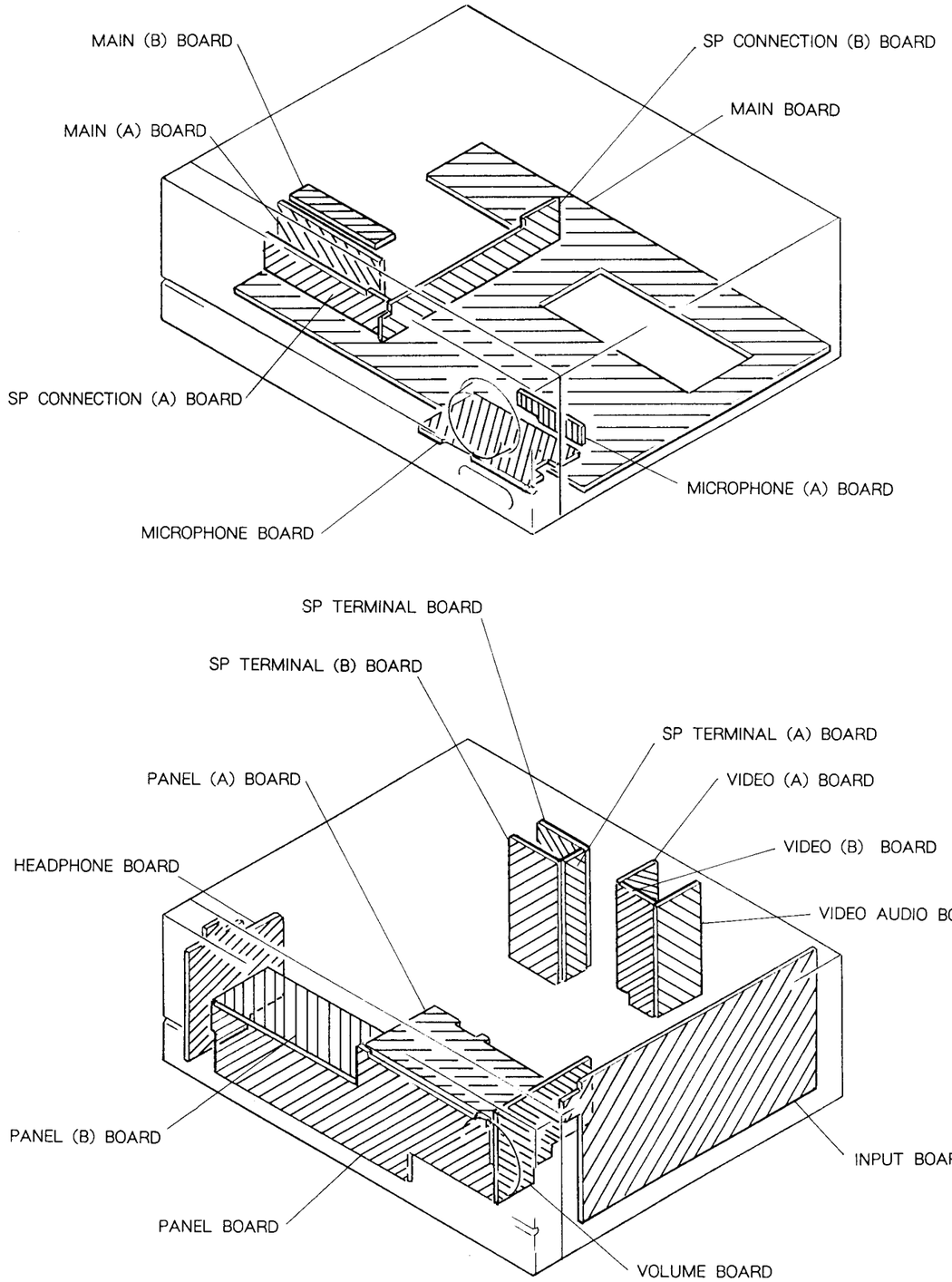

2-4. IC BL

IC105-107,

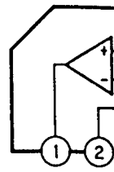

IC112 μ PC

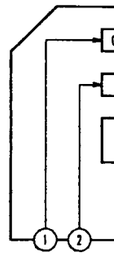

IC113 STK-

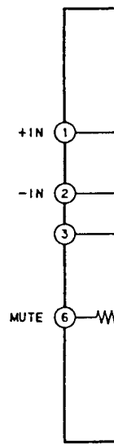

N

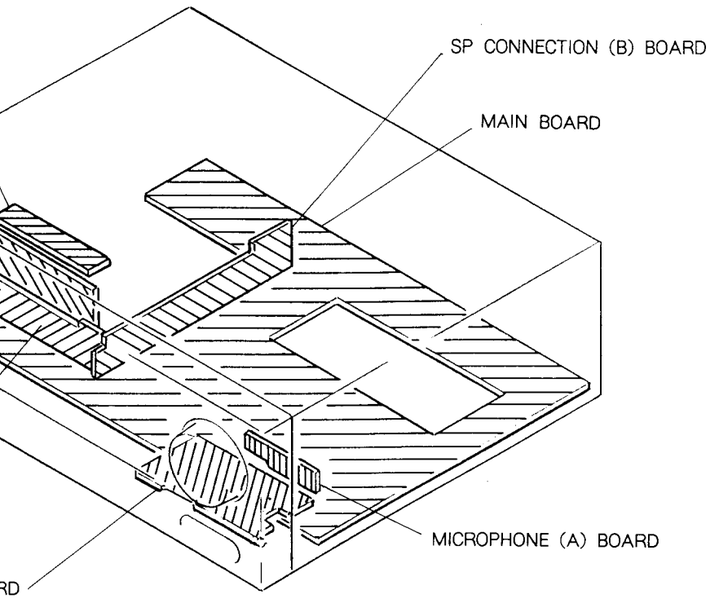

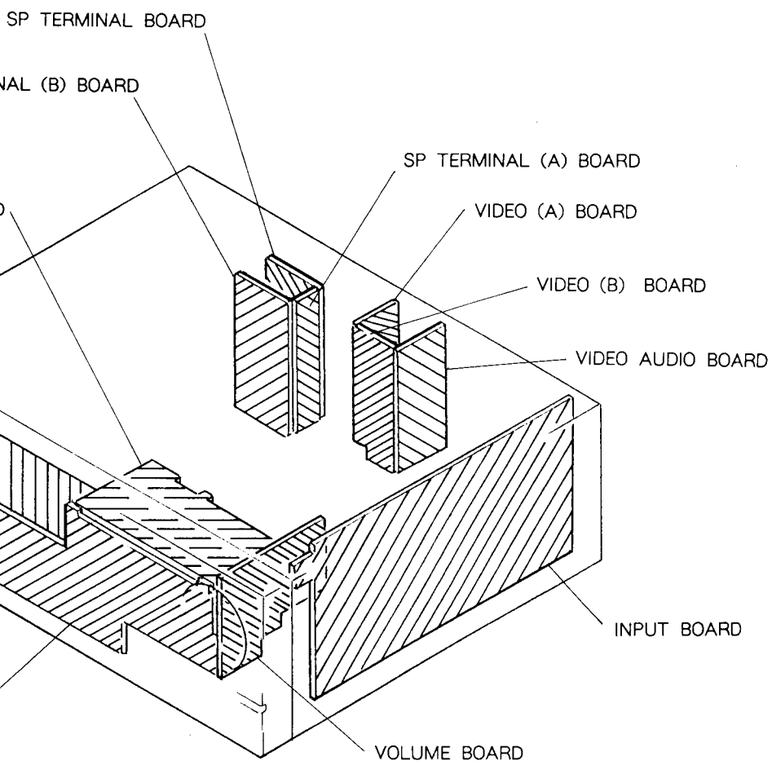

www.manualscenter.com

2-4. IC BLOCK DIAGRAM

IC105-107, 116, 701 M5218AL

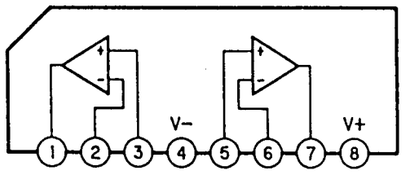

IC112 μPC1237HA

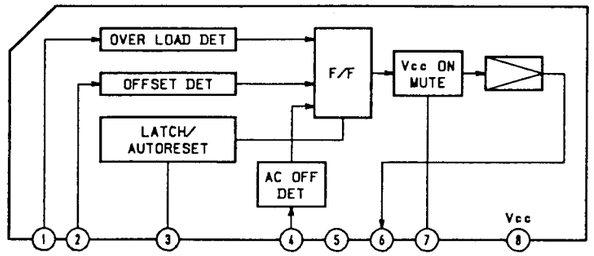

IC113 STK-4211MK2

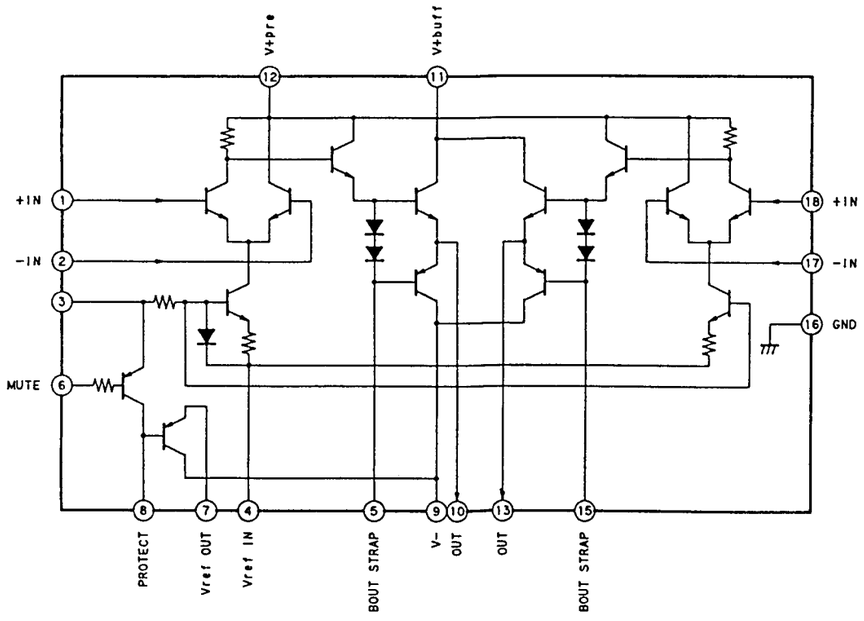

IC115 M51953BL

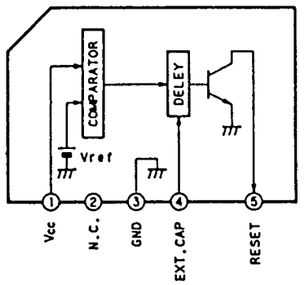

IC118 LC7821

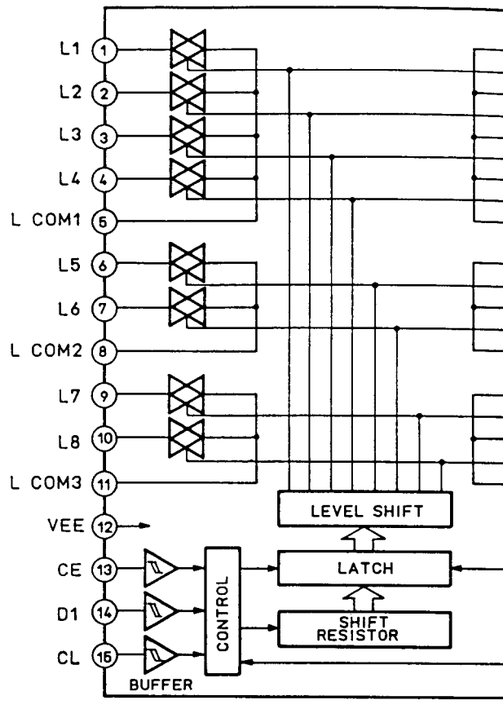

IC301, 302 BA6208

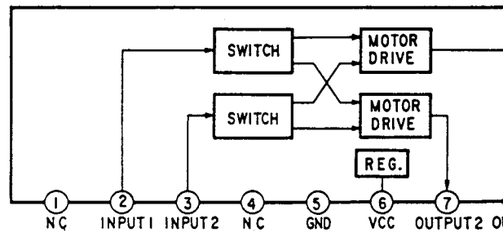

IC115 M51953BL

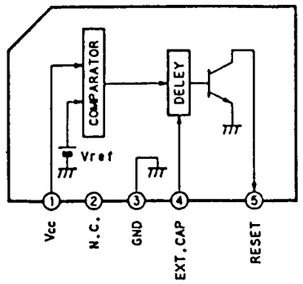

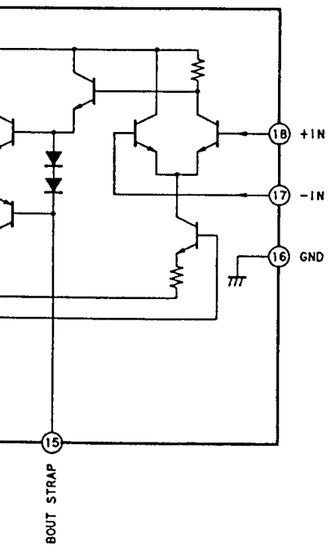

IC118 LC7821

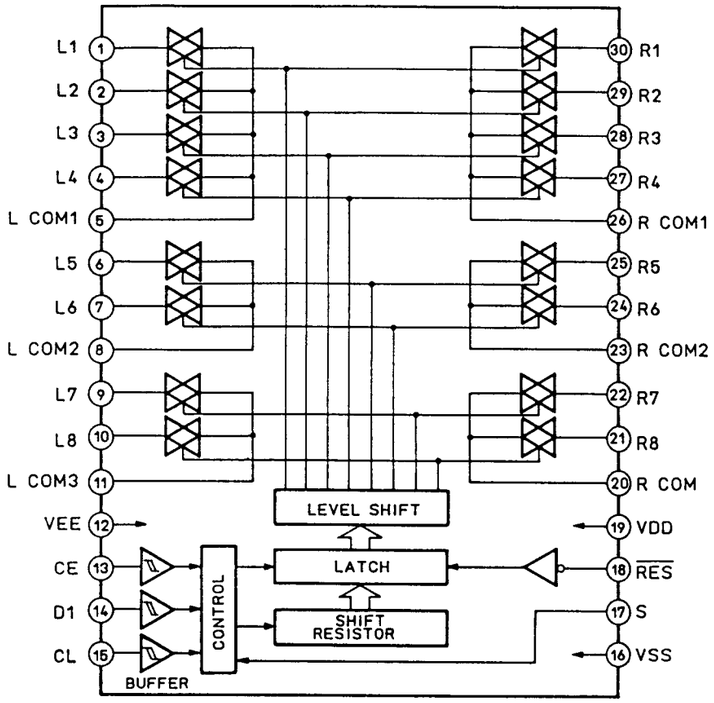

IC301, 302 BA6208

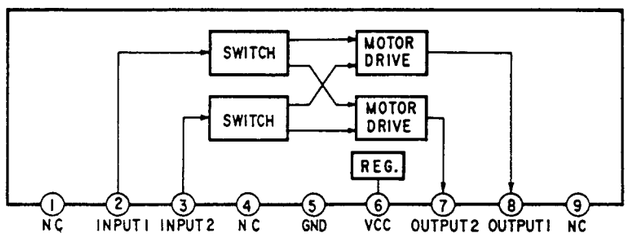

IC303 TC4051BPHB

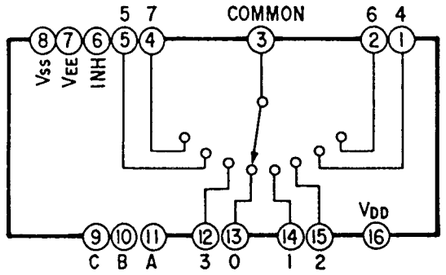

IC304 TC4052BPHB

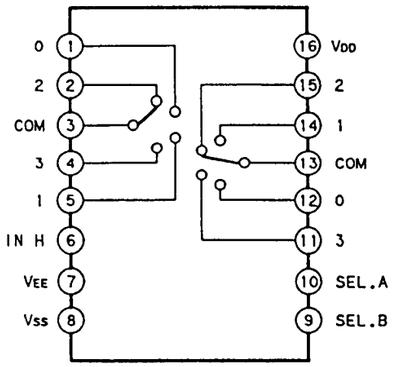

IC402 NE555P

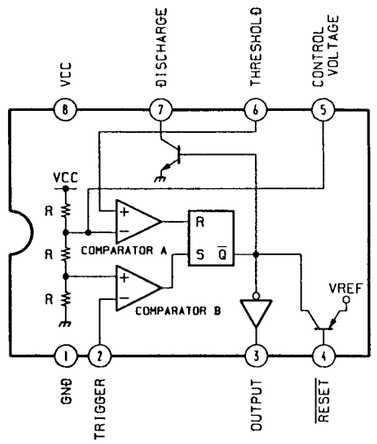

IC501 BA7625

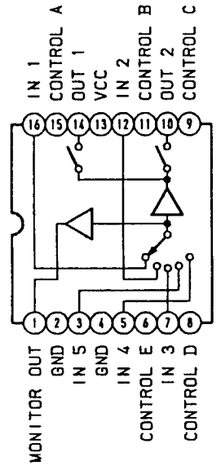

IC801 LB1639

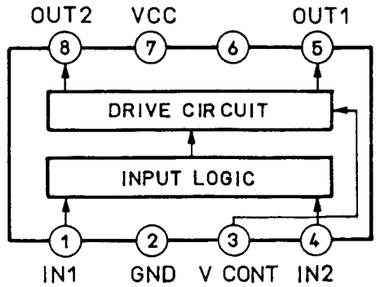

www.manualscenter.com

2-5. SEMICONDUCTOR LEAD LAYOUTS

NE555P

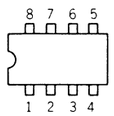

(TOP VIEW)

LC4996
LM339N

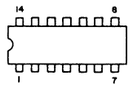

(TOP VIEW)

BA7625
MC14052BCP
TC4051BPHB

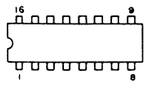

(TOP VIEW)

M5218AL
μPC12237HA

BA6208

LM35DZ-SL

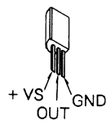

M5F7806KL
M5F7815L

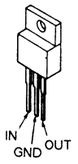

2SC1841-PAFAEA

2SK246-Y

2SC1387

DTA124ES
DTC124ES
2SC2603-EF
2SC3622A-LK

2SA1175-FEK

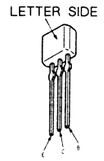

HZS12A2L
UZL-7M1
1SS120
11ES2

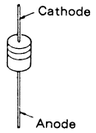

RBV-602-01

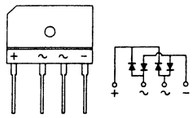

UZ-3.0BSB
1S1585
10W2N

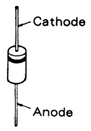

SEL2210S-D

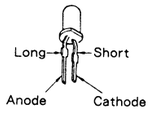

• Semiconductor Location

Ref. No.	Location
D71	C-8
D101	I-8
D105	I-3
D107	B-4
D109	H-6
D110	H-3
D111	G-3
D112	H-3
D115	C-11
D116	J-3
D117	H-11
D118	H-11
D119	H-11
D120	H-11
D122	I-11
D135	I-6
D144	B-17
D145	B-17
D150	H-13
D151	H-13
D152	I-13
D153	I-13
D158	D-9
D401	I-6
D402	B-4
D501	B-32
D538	C-18
D901	G-31
D902	H-30
D903	H-30
D904	J-31
D905	E-10
IC71	A-26
IC101	J-6
IC102	J-6
IC103	J-7
IC105	B-22
IC106	D-20
IC107	B-20
IC108	D-9
IC112	I-5
IC113	F-4
IC115	J-3
IC116	B-19
IC118	C-21
IC501	C-31
IC502	D-19
IC701	G-19
Q101	I-4
Q102	J-4
Q106	H-2
Q107	D-17
Q112	G-3
Q113	H-3
Q121	H-3
Q123	D-11
Q124	C-19
Q125	C-19
Q126	B-18
Q127	B-18
Q128	B-17
Q129	B-17
Q130	C-17
Q131	C-17
Q141	C-11
Q408	B-4
Q501	D-30
Q502	B-30
Q503	C-30
Q504	D-18
Q506	E-30
Q508	D-18

2-6. PRINTED WIRING BOARD - MAIN -

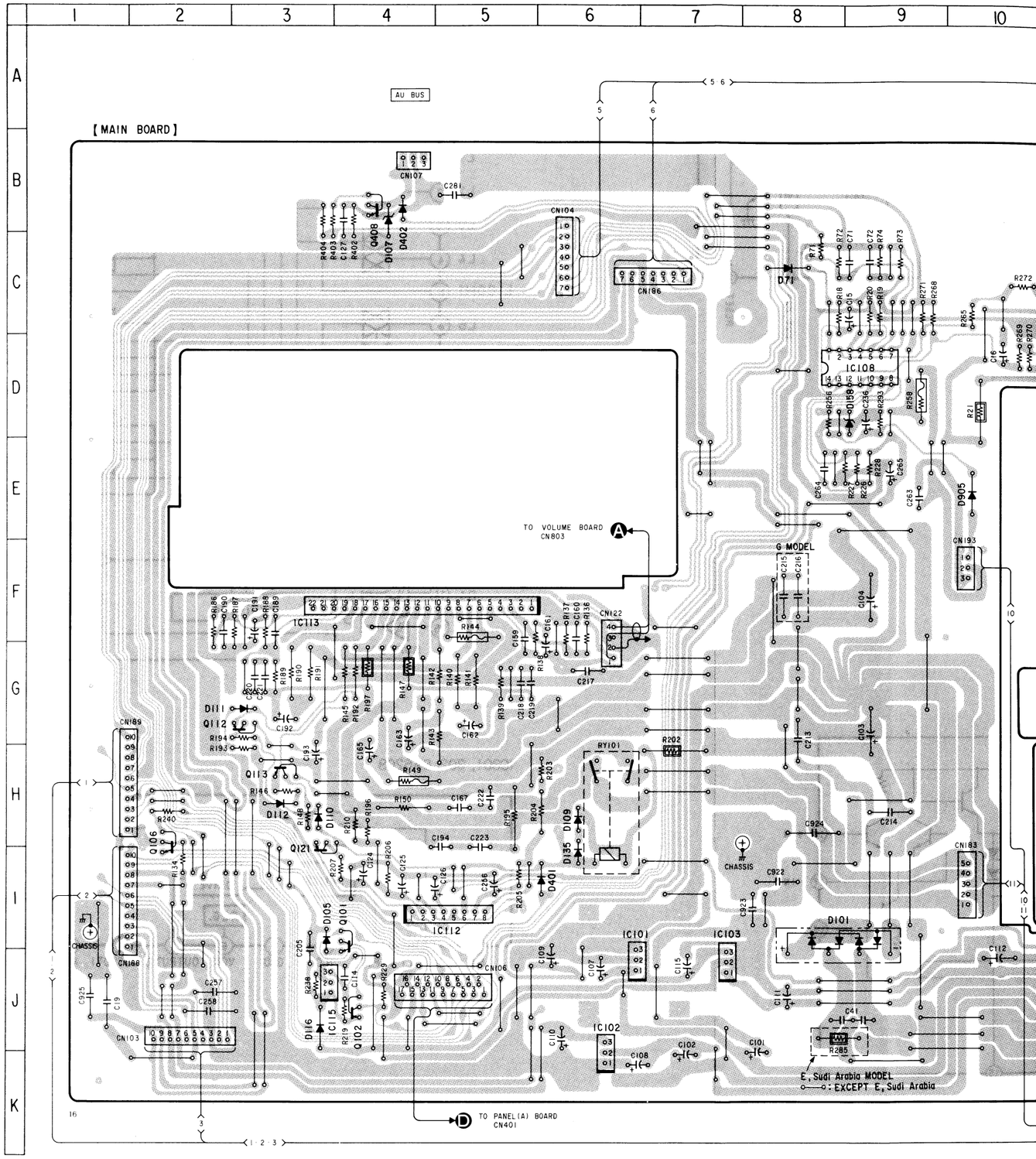

Note on Mounting Diagram:

- ○—— : parts extracted from the component side.
- ▒▒▒ : component side.

www.manualscenter.com

2-6. PRINTED WIRING BOARD - MAIN -

onductor Location

Location
C-8
I-8
I-3
B-4
H-6
H-3
G-3
H-3
C-11
J-3
H-11
H-11
H-11
H-11
I-11
I-6
B-17
B-17
H-13
H-13
I-13
I-13
D-9
I-6
B-4
B-32
C-18
G-31
H-30
H-30
J-31
E-10
A-26
J-6
J-6
J-7
B-22
D-20
B-20
D-9
I-5
F-4
J-3
B-19
C-21
C-31
D-19
G-19
I-4
J-4
H-2
D-17
G-3
H-3
H-3
D-11
C-19
C-19
B-18
B-18
B-17
B-17
C-17
C-17
C-11
B-4
D-30
B-30
C-30
D-18
E-30
D-18

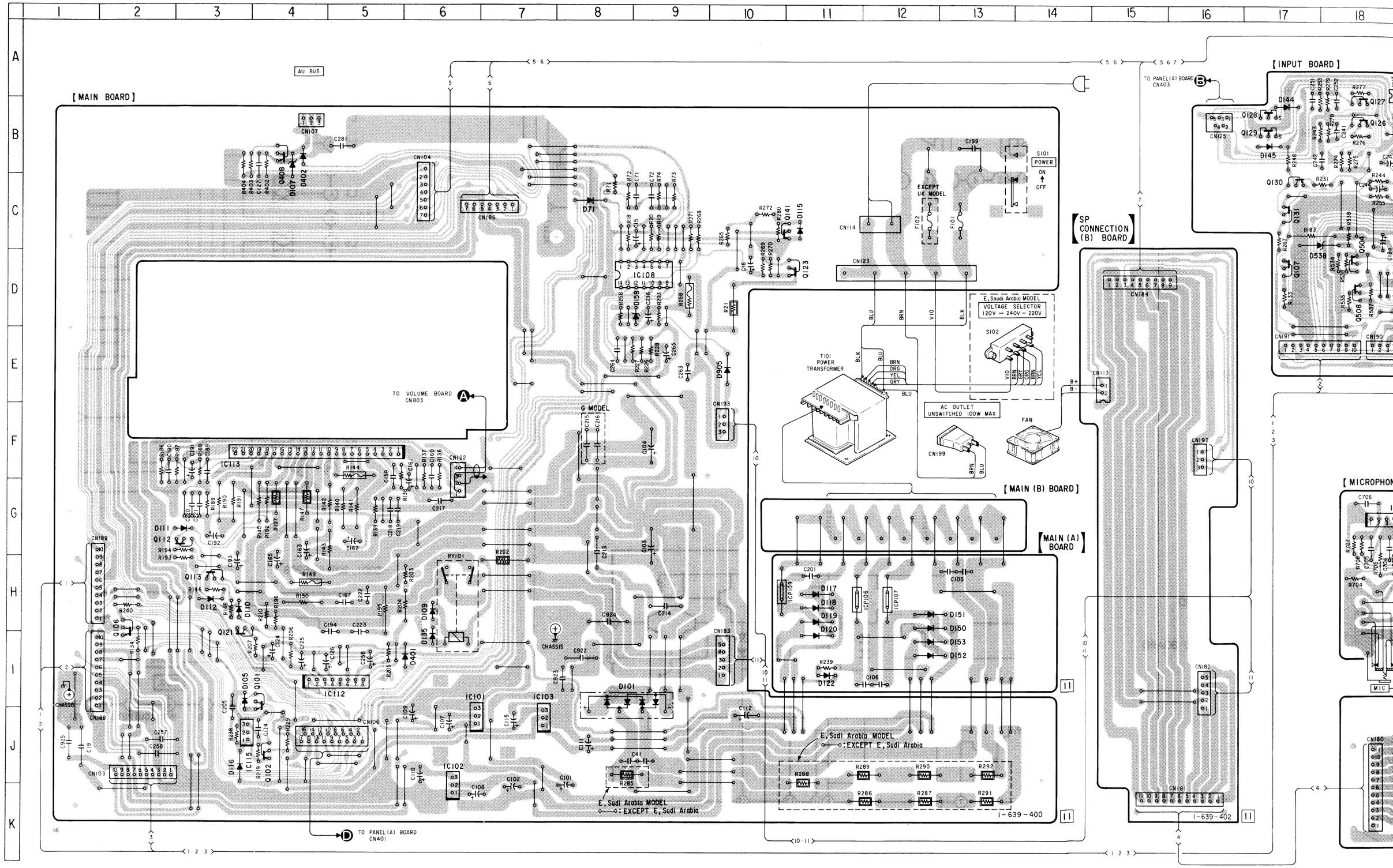

ounting Diagram:
parts extracted from the component side.
component side.

www.manualscenter.com

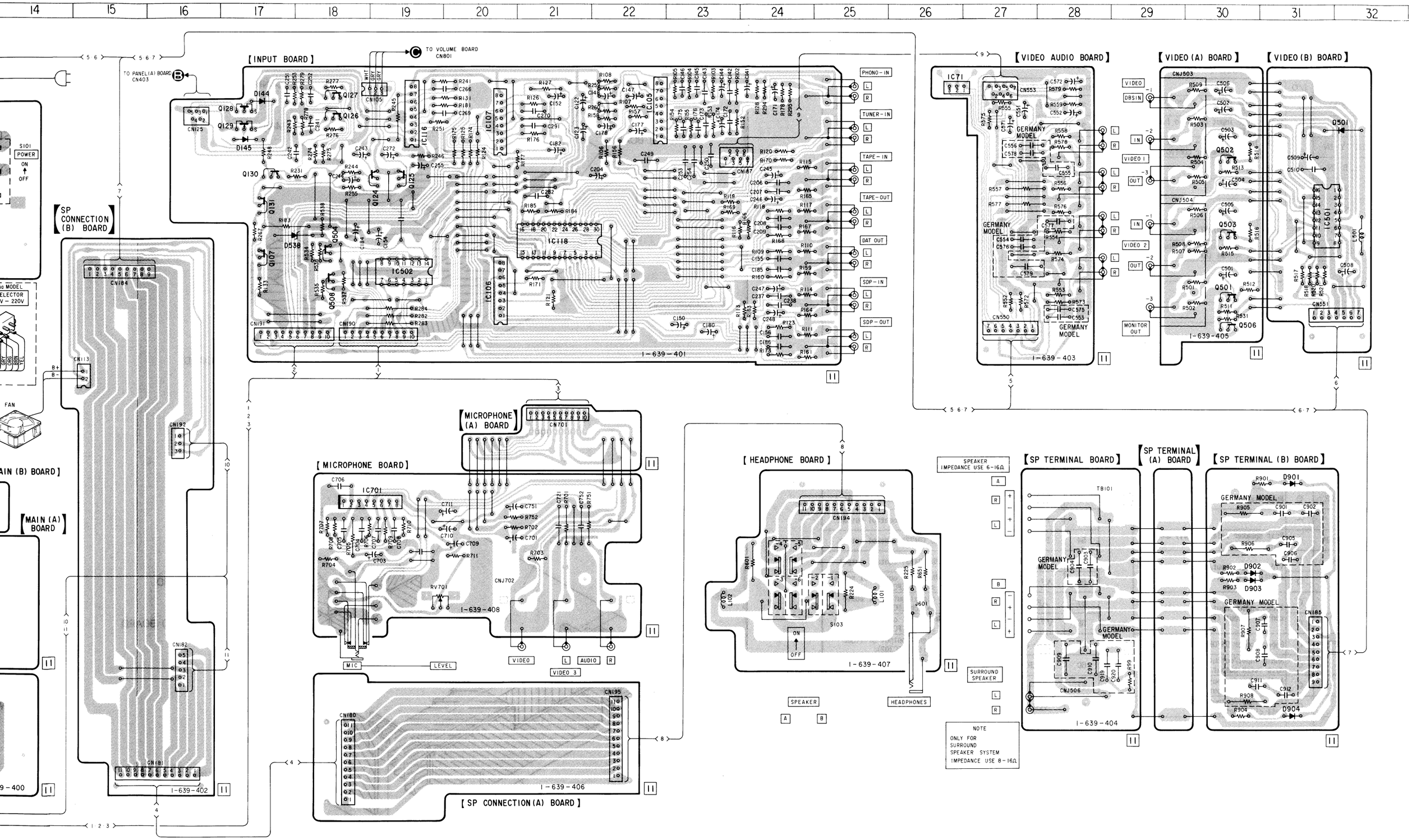

www.manualscenter.com

2-7. SCHEMATIC DIAGRAM – MAIN –

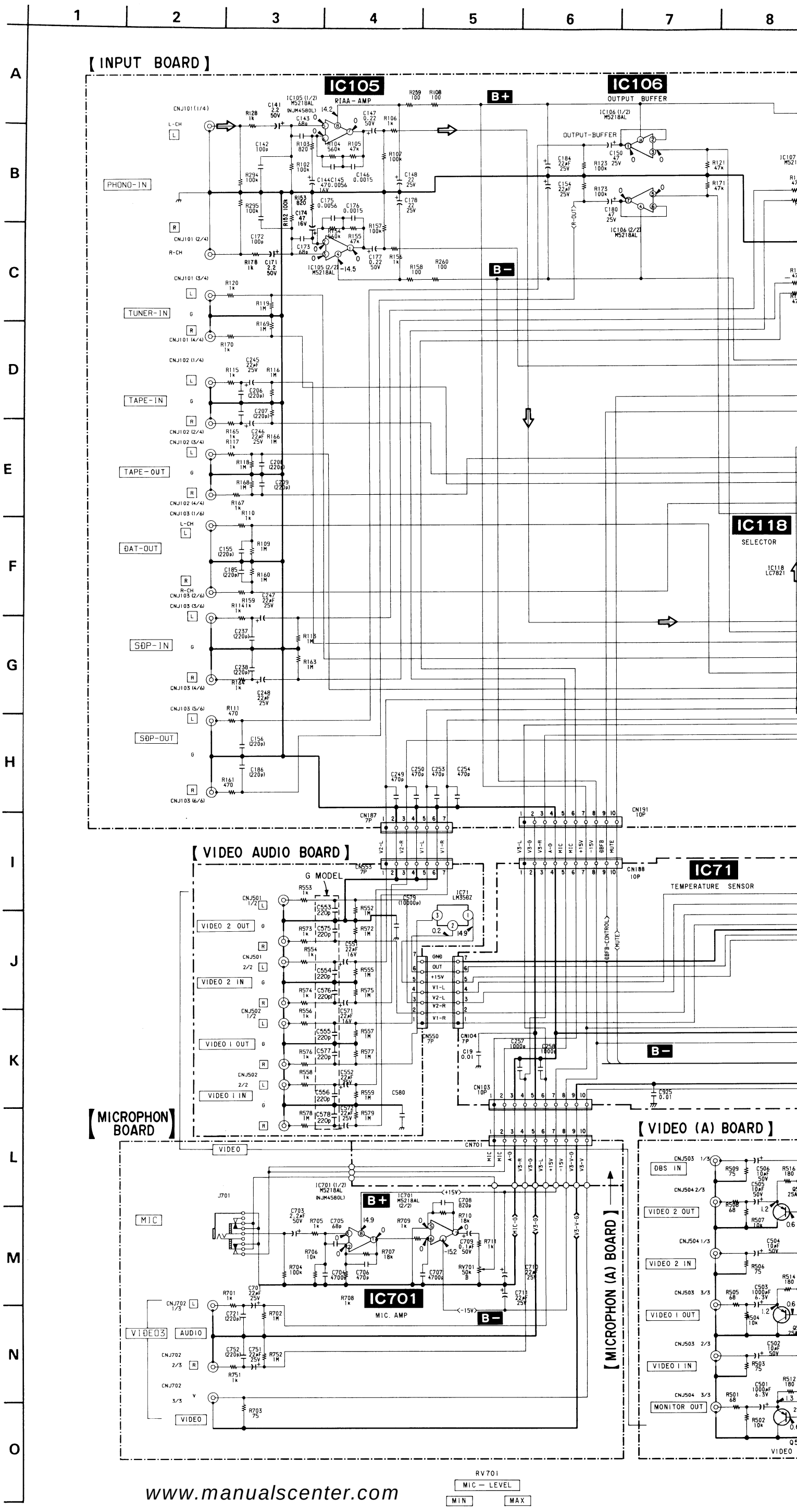

Note on Schematic Diagram:

- All capacitors are in μF unless otherwise noted. pF: μμF 50WV or less are not indicated except for electrolytics and tantalums.
- All resistors are in Ω and 1/4 W or less unless otherwise specified.
- : nonflammable resistor.
- : fusible resistor.

Note: The components identified by mark ⚠ or dotted line with mark ⚠ are critical for safety. Replace only with part number specified.

- B+ : B+ Line
- B− : B− Line

no mark : No-signal, PHONO MODE

- Voltage and waveforms are dc with respect to ground under no-signal conditions.
- Voltages are taken with a VOM (Input impedance 10M Ω) Voltage variations may be noted due to normal production tolerances.
- Circled numbers refer to waveforms.
- Signal path.
  ⇨ : PHONO

EA : SAUDI ARABIA MODEL
G : GERMANY MODEL
IT : ITALIAN MODEL

www.manualscenter.com

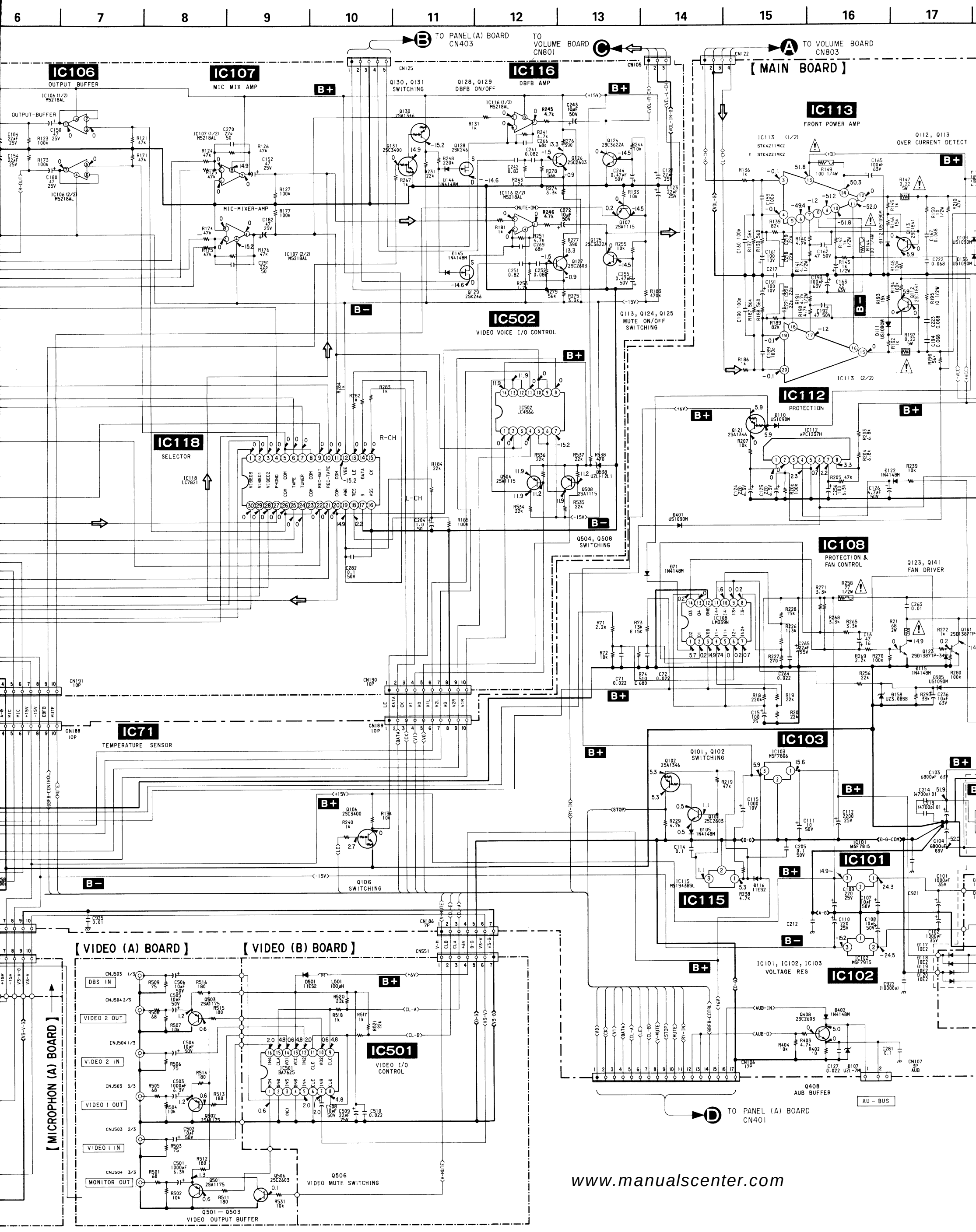

www.manualscenter.com

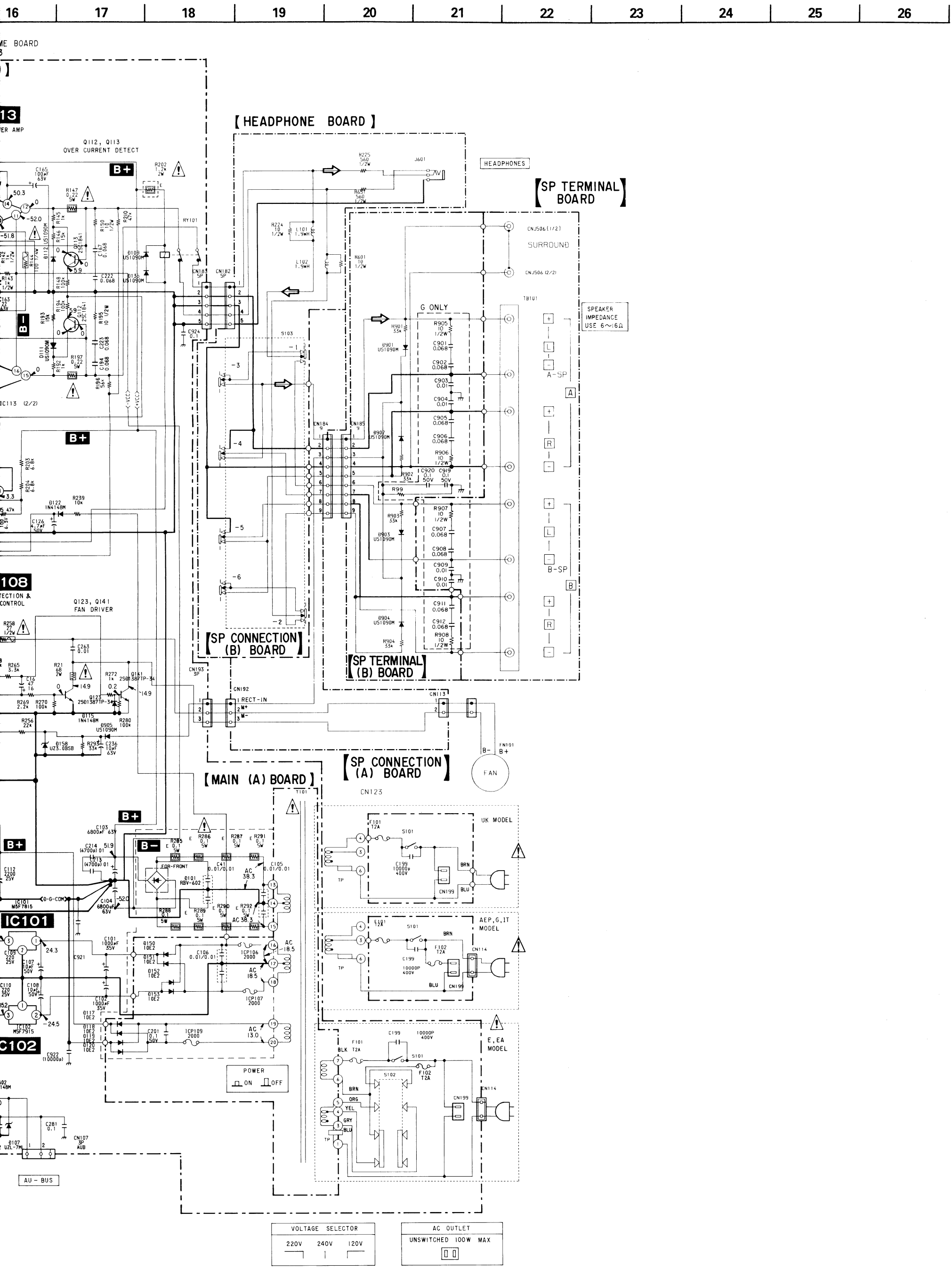

www.manualscenter.com

2-8. SCHEMATIC DIAGRAM – PANEL –

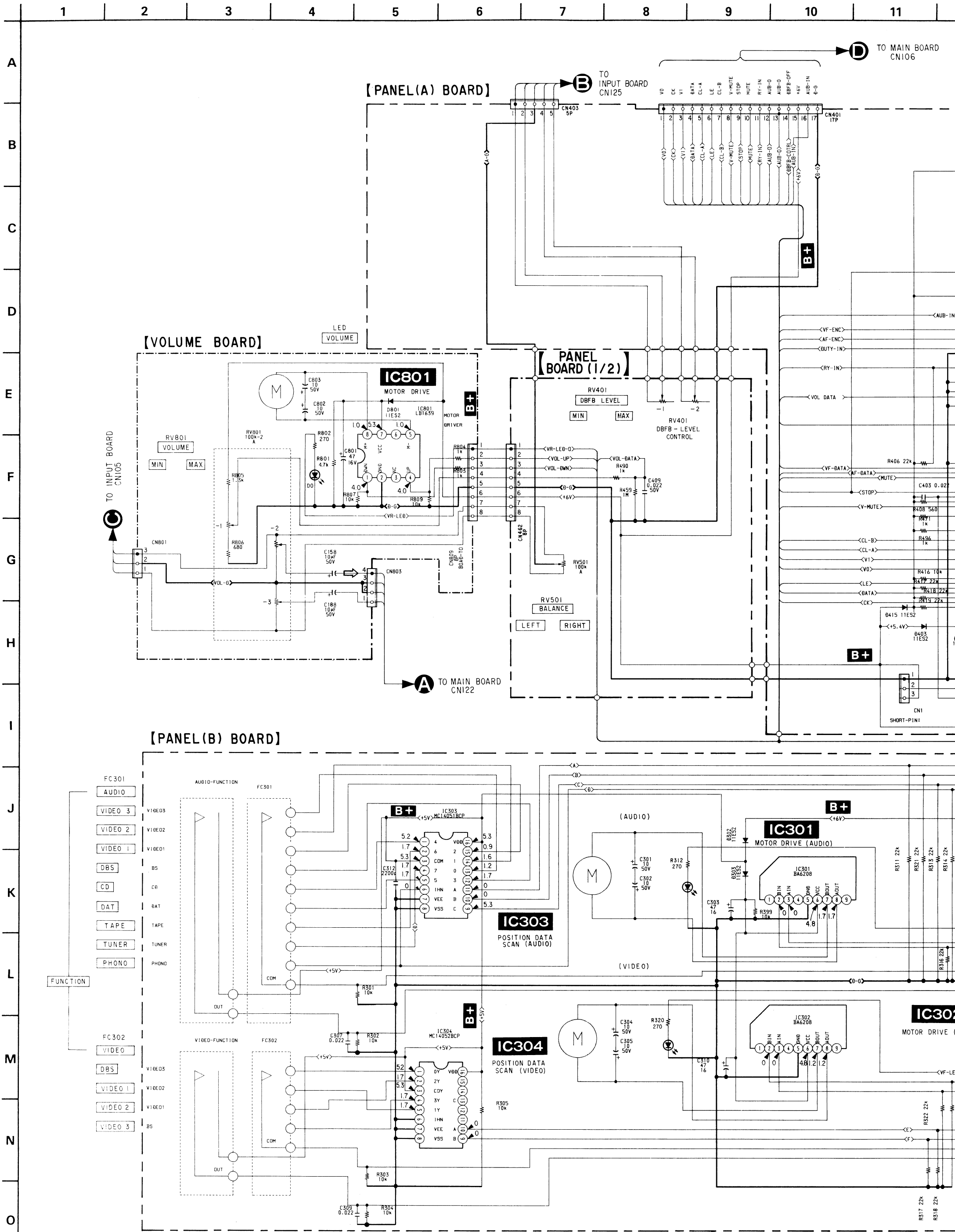

www.manualscenter.com

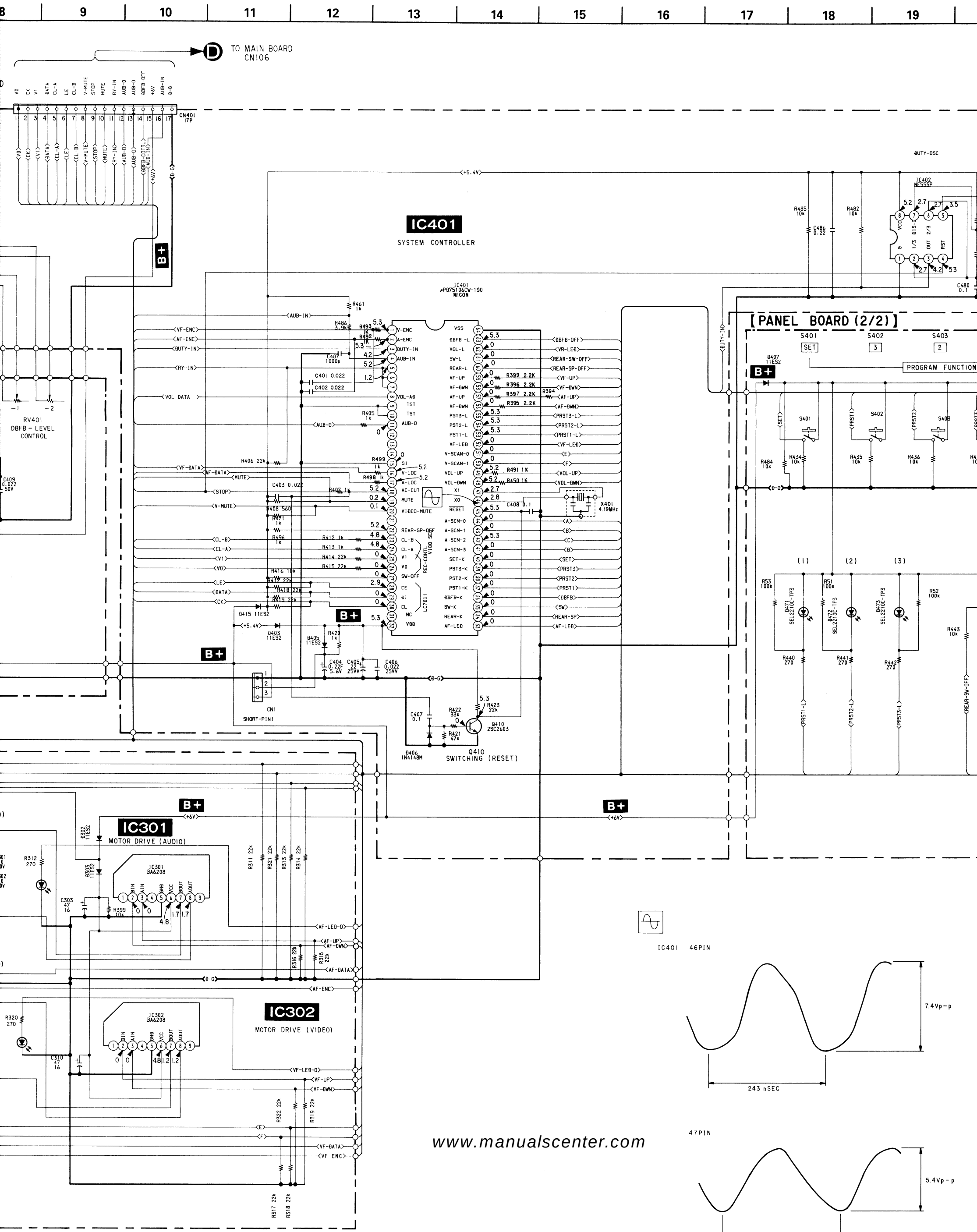

www.manualscenter.com

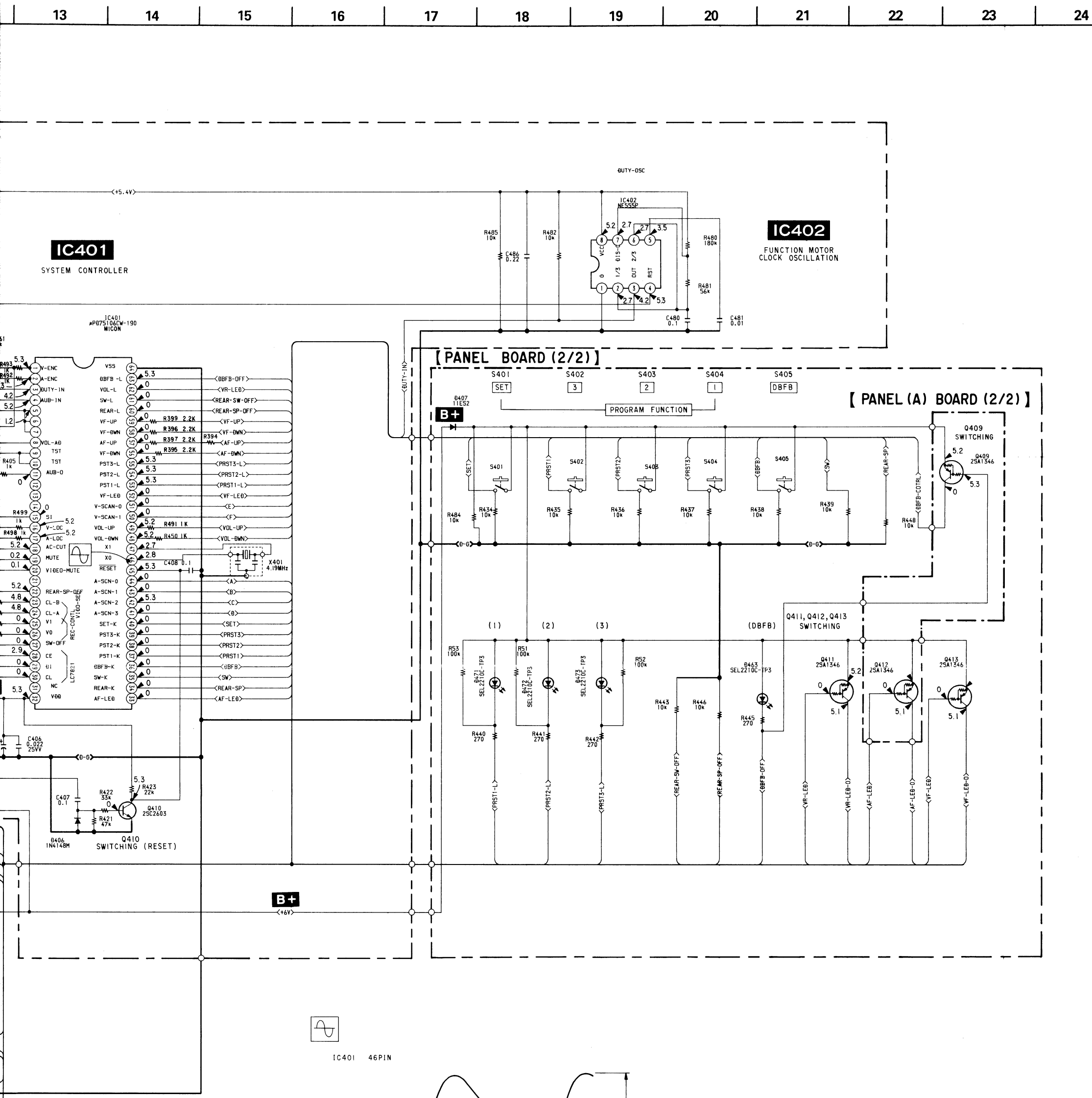

IC401 46PIN

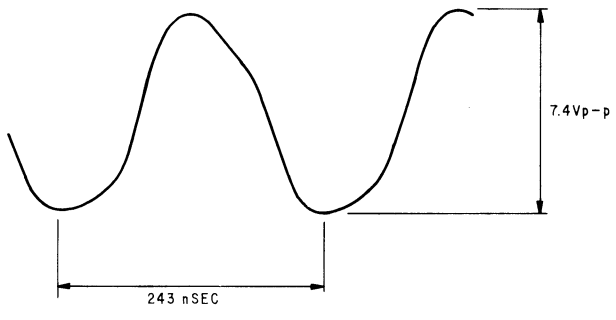

47PIN

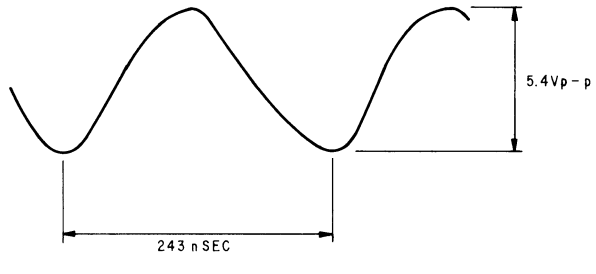

COMAACT HI-FIDELITY COMPONENT SYSTEM
POWER DRIVE DOUBLE ROTARY FUNCTION
LBT-D905

INTEGRATED STEREO AMPLIFIER
TA-D905

www.manualscenter.com

Note on Schematic Diagram:

- All capacitors are in μF unless otherwise noted. pF: μμF 50WV or less are not indicated except for electrolytics and tantalums.
- All resistors are in Ω and 1/4 W or less unless otherwise specified.
- : nonflammable resistor.
- : fusible resistor.

Note: The components identified by mark ⚠ or dotted line with mark ⚠ are critical for safety. Replace only with part number specified.

- B+ : B+ Line
- B− : B− Line

no mark : No-signal, PHONO MODE

- Voltage and waveforms are dc with respect to ground under no-signal conditions.
- Voltages are taken with a VOM (Input impedance 10M Ω) Voltage variations may be noted due to normal production tolerances.
- Circled numbers refer to waveforms.
- Signal path.

  ⇨ : PHONO

2-9. PRINTED WIRING BOARD – PANEL –

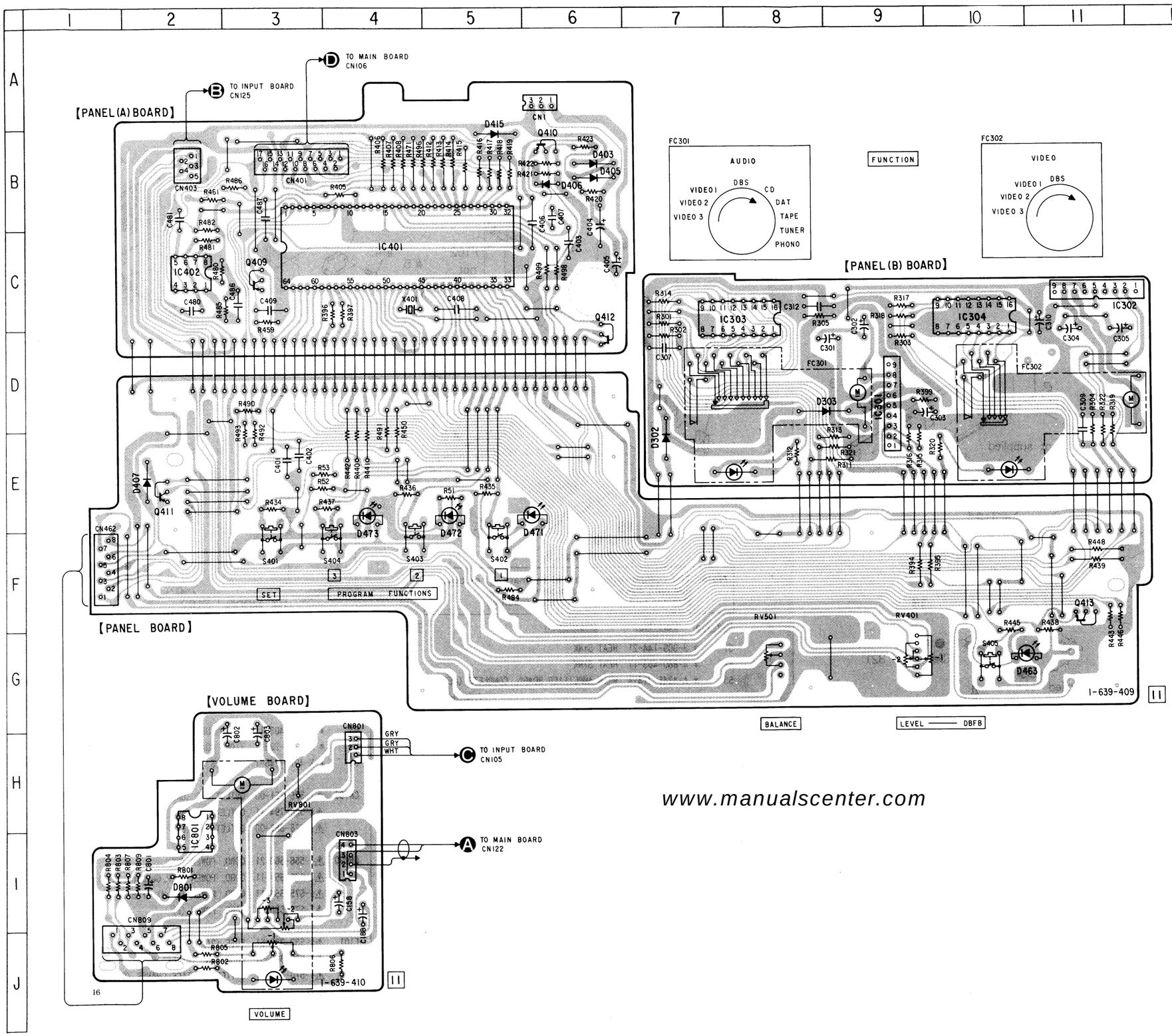

• Semiconductor Location

Ref. No.	Location
D302	E-7
D303	D-9
D403	B-6
D405	B-6
D406	B-6
D407	E-2
D415	B-5
D463	G-11
D471	E-6
D472	E-5
D473	E-4
D801	I-2
IC301	D-9
IC302	C-11
IC303	C-8
IC304	C-10
IC401	C-4
IC402	C-2
IC801	H-2
Q409	C-3
Q410	B-6
Q411	E-2
Q412	D-6
Q413	F-11

www.manualscenter.com

Note on Mounting Diagram:
- ○—— : parts extracted from the component side.
- ▒▒▒ : component side.

SECTION 3
EXPLODED VIEWS

NOTE :

- –XX, –X mean standardized parts, so they may have some differences from the original one.
- Color Indication of Appearance Parts
  Example :
  KNOB, BALANCE (WHITE)...(RED)
  ↑ Parts color ↑ Cabinet's color
- Items marked "*" are not stocked since they are seldom required for routine service. Some delay should be anticipated when ordering these items.
- The mechanical parts with no reference number in the exploded views are not supplied.
- Hardware (# mark) list is given in the last of this parts list.

The components identified by mark ⚠ or dotted line with mark ⚠ are critical for safety.
Replace only with part number specified.

3-1. OVERALL SECTION 1

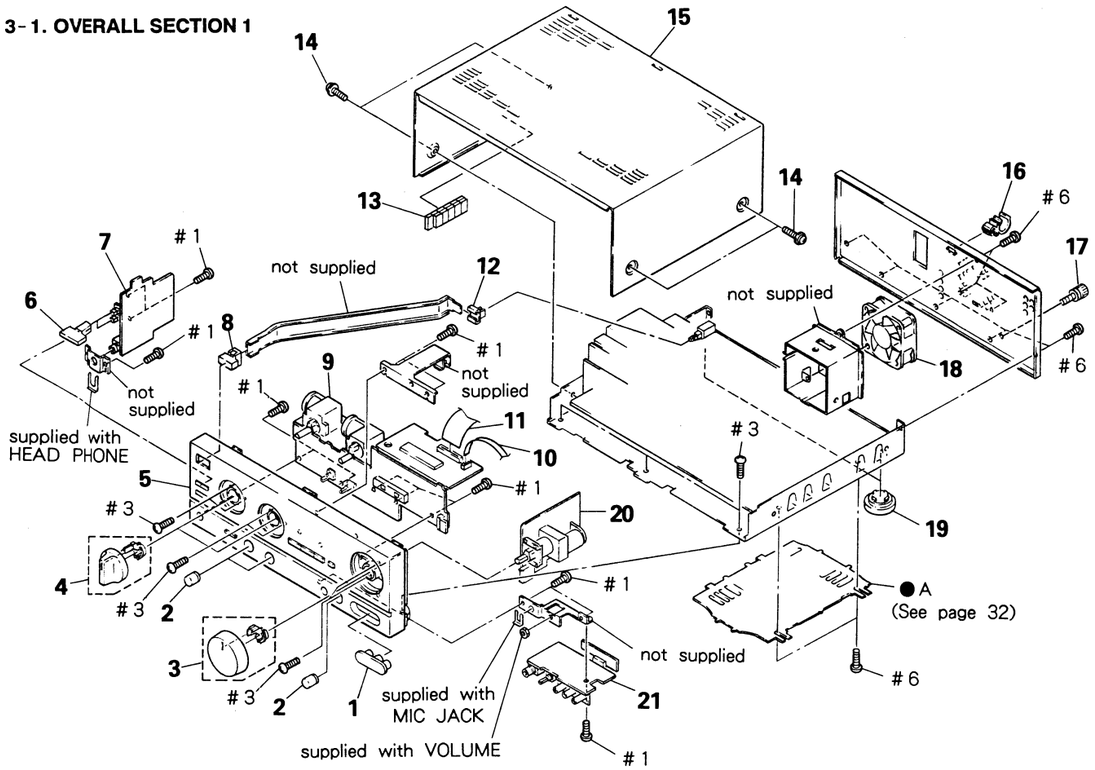

Ref. No.	Part No.	Description	Remarks
1	4-937-367-01	COVER (PIN JACK) (AEP, UK, Germany, Italian)	
2	3-349-039-11	KNOB (VOL)	
3	X-4941-027-1	KNOB (DIA. 47) ASSY, ROUND	
4	X-4941-026-1	KNOB (DIA. 36) ASSY, SQUARE	
5	X-4941-493-1	PANEL ASSY, FRONT	
6	4-937-308-01	BUTTON (SP)	
7	* 1-639-407-11	HEADPHONE BOARD	
8	4-921-919-01	BUTTON (P)	
9	* A-4345-228-A	PANEL BOARD, COMPLETE	
10	1-690-100-11	WIRE, FLAT TYPE (5 CORE)	
11	1-690-102-11	WIRE, FLAT TYPE (17 CORE)	
12	4-866-342-00	JOINT (B), KNOB	
13	* 4-911-047-01	VIBRATION CONTROL (D)	
14	3-363-099-01	SCREW (CASE +3X8 TP2)	
15	* 4-944-980-01	CASE	
16	* 3-646-086-11	HOLDER, ROD	
17	3-706-165-00	SCREW	
18	1-541-889-11	MOTOR, DC FAN	
19	4-934-884-01	FOOT	
20	* 1-639-410-11	VOLUME BOARD	
21	* 1-639-408-11	MICROPHONE BOARD	

3-2. OVERALL SECTION 2

▲A: MAIN (B) BOARD
▲B: MAIN (A) BOARD

EA : Saudi Arabia

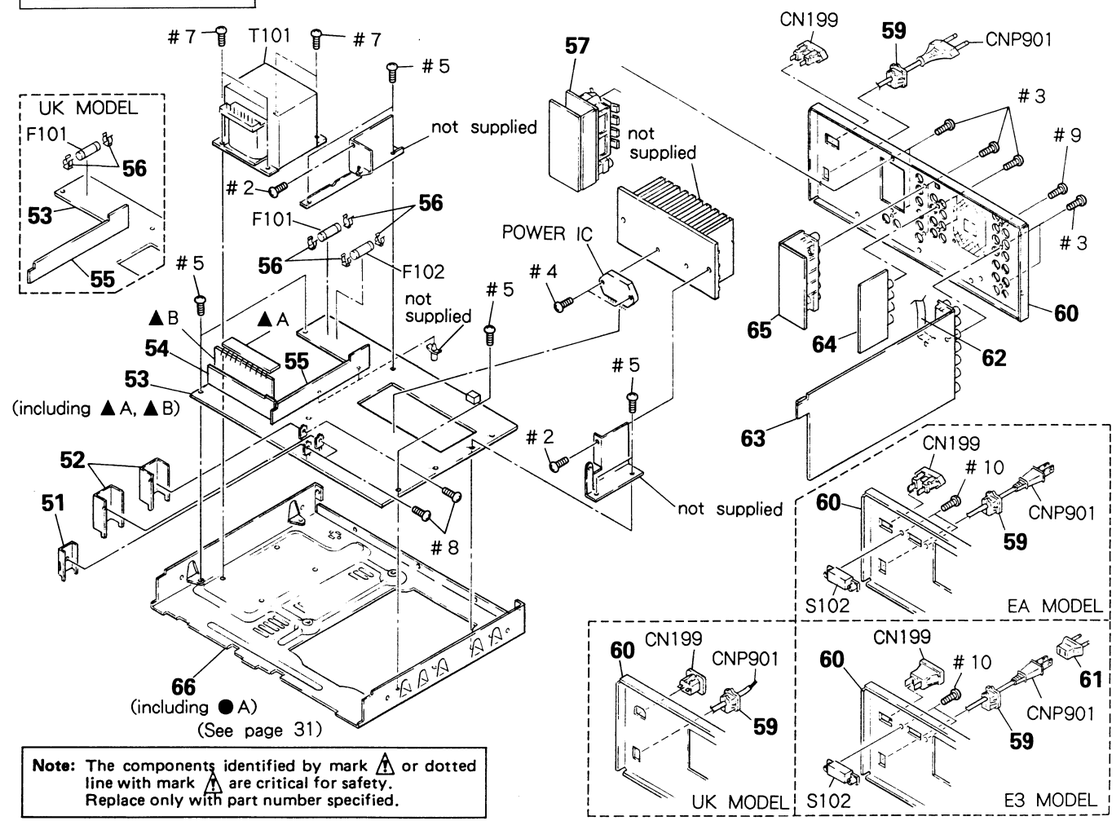

Note: The components identified by mark ⚠ or dotted line with mark ⚠ are critical for safety.
Replace only with part number specified.

Ref. No.	Part No.	Description	Remarks
51	* 3-309-144-21	HEAT SINK	
52	* 4-880-403-11	HEAT SINK	
53	* A-4345-214-A	MAIN AMPLIFIER BOARD, COMPLETE (AEP, Italian) (including ▲A, ▲B)	
	* A-4345-215-A	MAIN AMPLIFIER BOARD, COMPLETE (Germany) (including ▲A, ▲B)	
	* A-4345-230-A	MAIN AMPLIFIER BOARD, COMPLETE (UK) (including ▲A, ▲B)	
	* A-4345-231-A	MAIN AMPLIFIER BOARD, COMPLETE(E, Saudi Arabia) (including ▲A, ▲B)	
54	* 1-639-406-11	SP CONNECTION (A) BOARD	
55	* 1-639-402-11	SP CONNECTION (B) BOARD	
56	* 1-533-213-31	HOLDER FUSE	
57	* 1-639-404-11	SP TERMINAL BOARD	
59	* 3-703-244-00	BUSHING (2104), CORD (AEP, UK, Germany, Italian, Saudi Arabia)	
	* 3-703-571-11	BUSHING (S) (4516), CORD (E)	
60	* 4-944-324-11	PANEL, BACK (AEP)	
	* 4-944-324-21	PANEL, BACK (UK)	
	* 4-944-324-31	PANEL, BACK (Germany)	
	* 4-944-324-41	PANEL, BACK (Italian)	
	* 4-944-324-51	PANEL, BACK (E)	
	* 4-944-324-61	PANEL, BACK (Saudi Arabia)	
62	1-690-101-11	WIRE, FLAT TYPE (7 CORE)	
63	* A-4345-216-A	INPUT BOARD, COMPLETE (AEP, UK, E, Italian, Saudi Arabia)	
	* A-4345-217-A	INPUT BOARD, COMPLETE (Germany)	
64	* 1-639-403-11	VIDEO AUDIO BOARD	
65	* A-4345-223-A	VIDEO BOARD, COMPLETE	
66	* X-4917-246-1	CHASSIS ASSY(including ●A)	
CN199	⚠1-526-751-00	OUTLET, AC (UK)	
	⚠1-526-794-11	OUTLET, AC (AEP, Germany, Italian, Saudi Arabia)	
	⚠1-526-882-00	OUTLET, AC (E)	
CNP901	⚠1-556-560-21	CORD, POWER (UK)	
	⚠1-575-651-11	CORD, POWER (AEP, Germany, Italian)	
	⚠1-575-654-11	CORD, POWER (Saudi Arabia)	
	⚠1-575-656-11	CORD, POWER (E)	
F101	⚠1-532-388-51	FUSE (2A)	
F102	⚠1-532-388-51	FUSE (2A) (EXCEPT UK)	
S102	⚠1-570-307-11	SWITCH, VOLTAGE CHANGE (E, Saudi Arabia)	
T101	⚠1-450-526-11	TRANSFORMER, POWER (AEP, UK, Germany, Italian)	
	⚠1-450-527-11	TRANSFORMER, POWER (E, Saudi Arabia)	

www.manualscenter.com

INPUT | SP CONNECTION(B) | VIDEO AUDIO | SP TERMINAL

SECTION 4
ELECTRICAL PARTS LIST

NOTE :

The components identified by mark ⚠ or dotted line with mark ⚠ are critical for safety.
Replace only with part number specified.

When indicating parts by reference number, please include the board name.

- Due to standardization, replacements in the parts list may be defferent from the parts specified in the diagrams or the components used on the set.
- -XX, -X mean standardized parts, so they may have some difference from the original one.
- RESISTORS
  All resistors are in ohms.
  METAL : metal-film resistor
  METAL OXIDE: Metal Oxide-film resistor
  F : nonflammable
- Items marked "*" are not stocked since they are seldom required for routine service. Some delay should be anticipated when ordering these items.
- SEMICONDUCTORS
  In each case, u : μ, for example :
  uA... : μA... , uPA... , μPA... , uPB... , μPB... , uPC... , μPC... , uPD..., μPD...
- CAPACITORS :
  uF : μF
- COILS
  uH : μH

Ref. No.	Part No.	Description				Remarks
	* A-4345-216-A	INPUT BOARD, COMPLETE (AEP, UK, E, IT, Saudi Arabia)				
	* A-4345-217-A	INPUT BOARD, COMPLETE (Germany)				
		**********				
	* 1-639-402-11	SP CONNECTION (B) BOARD				
		**********				
	* 1-639-403-11	VIDEO AUDIO BOARD				
		**********				
	* 1-639-404-11	SP TERMINAL BOARD				
		**********				
		< CAPACITOR >				
C122	1-126-049-11	ELECT	22uF	20%	25V	
C123	1-126-049-11	ELECT	22uF	20%	25V	
C141	1-126-161-11	ELECT	2.2uF	20%	50V	
C142	1-162-282-31	CERAMIC	100PF	10%	50V	
C143	1-162-219-31	CERAMIC	68PF	5%	50V	
C144	1-126-022-11	ELECT	47uF	20%	16V	
C145	1-130-480-00	MYLAR	0.0056uF	5%	50V	
C146	1-130-473-00	MYLAR	0.0015uF	5%	50V	
C147	1-124-464-11	ELECT	0.22uF	20%	50V	
C148	1-126-049-11	ELECT	22uF	20%	25V	
C150	1-124-910-11	ELECT	47uF	20%	50V	
C152	1-124-910-11	ELECT	47uF	20%	50V	
C154	1-126-049-11	ELECT	22uF	20%	25V	
C155	1-162-286-31	CERAMIC	220PF	10%	50V	(Germany)
C156	1-162-286-31	CERAMIC	220PF	10%	50V	(Germany)
C157	1-162-286-31	CERAMIC	220PF	10%	50V	(Germany)
C171	1-126-161-11	ELECT	2.2uF	20%	50V	
C172	1-162-282-31	CERAMIC	100PF	10%	50V	
C173	1-162-219-31	CERAMIC	68PF	5%	50V	
C174	1-126-022-11	ELECT	47uF	20%	16V	
C175	1-130-480-00	MYLAR	0.0056uF	5%	50V	
C176	1-130-473-00	MYLAR	0.0015uF	5%	50V	
C177	1-124-464-11	ELECT	0.22uF	20%	50V	
C178	1-126-049-11	ELECT	22uF	20%	25V	
C180	1-124-910-11	ELECT	47uF	20%	50V	
C182	1-124-910-11	ELECT	47uF	20%	50V	
C184	1-126-049-11	ELECT	22uF	20%	25V	
C185	1-162-286-31	CERAMIC	220PF	10%	50V	(Germany)
C186	1-162-286-31	CERAMIC	220PF	10%	50V	(Germany)
C187	1-162-286-31	CERAMIC	220PF	10%	50V	(Germany)
C204	1-126-301-11	ELECT	1uF	20%	50V	
C206	1-162-286-31	CERAMIC	220PF	10%	50V	(Germany)
C207	1-162-286-31	CERAMIC	220PF	10%	50V	(Germany)
C208	1-162-286-31	CERAMIC	220PF	10%	50V	(Germany)
C209	1-162-286-31	CERAMIC	220PF	10%	50V	(Germany)
C237	1-162-286-31	CERAMIC	220PF	10%	50V	(Germany)
C238	1-162-286-31	CERAMIC	220PF	10%	50V	(Germany)
C241	1-136-164-00	FILM	0.082uF	5%	50V	
C242	1-136-176-00	FILM	0.82uF	5%	50V	
C243	1-126-059-11	ELECT	10uF	20%	50V	

INPUT | SP CONNECTION(B) | VIDEO AUDIO | SP TERMINAL

Ref. No.	Part No.	Description				Remarks
C244	1-126-300-11	ELECT	0.47uF	20%	50V	
C245	1-126-049-11	ELECT	22uF	20%	25V	
C246	1-126-049-11	ELECT	22uF	20%	25V	
C247	1-126-049-11	ELECT	22uF	20%	25V	
C248	1-126-049-11	ELECT	22uF	20%	25V	
C249	1-162-290-31	CERAMIC	470PF	10%	50V	
C250	1-162-290-31	CERAMIC	470PF	10%	50V	
C251	1-136-176-00	FILM	0.82uF	5%	50V	
C252	1-136-164-00	FILM	0.082uF	5%	50V	
C253	1-162-290-31	CERAMIC	470PF	10%	50V	
C254	1-162-290-31	CERAMIC	470PF	10%	50V	
C255	1-126-300-11	ELECT	0.47uF	20%	50V	
C266	1-162-219-31	CERAMIC	68PF	5%	50V	
C269	1-162-219-31	CERAMIC	68PF	5%	50V	
C270	1-162-207-31	CERAMIC	22PF	5%	50V	
C272	1-126-059-11	ELECT	10uF	20%	50V	
C282	1-164-159-11	CERAMIC	0.1uF		50V	
C291	1-162-207-31	CERAMIC	22PF	5%	50V	
C551	1-124-234-00	ELECT	22uF	20%	16V	
C552	1-126-049-11	ELECT	22uF	20%	25V	
C553	1-162-286-31	CERAMIC	220PF	10%	50V	(Germany)
C554	1-162-286-31	CERAMIC	220PF	10%	50V	(Germany)
C555	1-162-286-31	CERAMIC	220PF	10%	50V	(Germany)
C556	1-162-286-31	CERAMIC	220PF	10%	50V	(Germany)
C571	1-124-234-00	ELECT	22uF	20%	16V	
C572	1-126-049-11	ELECT	22uF	20%	25V	
C575	1-162-286-31	CERAMIC	220PF	10%	50V	(Germany)
C576	1-162-286-31	CERAMIC	220PF	10%	50V	(Germany)
C577	1-162-286-31	CERAMIC	220PF	10%	50V	(Germany)
C578	1-162-286-31	CERAMIC	220PF	10%	50V	(Germany)
C579	1-161-379-00	CERAMIC	0.01uF	20%	25V	(Germany)
C901	1-136-163-00	FILM	0.068uF	5%	50V	(Germany)
C902	1-136-163-00	FILM	0.068uF	5%	50V	(Germany)
C903	1-161-379-00	CERAMIC	0.01uF	20%	25V	(Germany)
C904	1-161-379-00	CERAMIC	0.01uF	20%	25V	(Germany)
C905	1-136-163-00	FILM	0.068uF	5%	50V	(Germany)
C906	1-136-163-00	FILM	0.068uF	5%	50V	(Germany)
C907	1-136-163-00	FILM	0.068uF	5%	50V	(Germany)
C908	1-136-163-00	FILM	0.068uF	5%	50V	(Germany)
C909	1-161-379-00	CERAMIC	0.01uF	20%	25V	(Germany)
C910	1-161-379-00	CERAMIC	0.01uF	20%	25V	(Germany)
C911	1-136-163-00	FILM	0.068uF	5%	50V	(Germany)
C912	1-136-163-00	FILM	0.068uF	5%	50V	(Germany)
C919	1-164-159-11	CERAMIC	0.1uF		50V	(Germany)
C920	1-164-159-11	CERAMIC	0.1uF		50V	(Germany)

< CONNECTOR >

CN113	* 1-564-517-11	PLUG, CONNECTOR 2P
CN125	* 1-568-848-11	SOCKET, CONNECTOR 5P
CN181	1-569-497-11	SOCKET, CONNECTOR 11P
CN182	* 1-569-500-11	PIN, CONNECTOR 5P
CN184	* 1-569-504-11	PIN, CONNECTOR 9P
CN185	* 1-569-495-11	SOCKET, CONNECTOR 9P
CN187	* 1-568-826-11	SOCKET, CONNECTOR 7P
CN190	* 1-569-505-11	PIN, CONNECTOR 10P
CN191	* 1-569-505-11	PIN, CONNECTOR 10P
CN192	* 1-569-499-11	PIN, CONNECTOR 3P
CN550	* 1-569-502-11	PIN, CONNECTOR 7P
CN553	* 1-568-850-11	SOCKET, CONNECTOR 7P
CNJ101	1-565-352-11	JACK, PIN 2P (TUNER IN, PHONO IN)
CNJ102	1-565-320-11	JACK, PIN 6P (TAPE:IN/OUT)
CNJ103	1-565-320-11	JACK, PIN 6P (SDP:IN/OUT, DAT OUT)
CNJ501	1-565-258-11	JACK, PIN 4P (VIDEO 2 IN)
CNJ502	1-565-258-11	JACK, PIN 4P (VIDEO 1 IN)
CNJ506	1-568-572-11	JACK, PIN 2P (SURROUND SPEAKER)
TB101	1-537-336-21	TERMINAL BOARD (SP) (A/B)

www.manualscenter.com

INPUT | SP CONNECTION(B) | VIDEO AUDIO | SP TERMINAL

Ref. No.	Part No.	Description				Remarks
		< DIODE >				
D144	8-719-912-20	DIODE	1SS120			
D145	8-719-912-20	DIODE	1SS120			
D538	8-719-933-74	DIODE	HZS12A2L			
D901	8-719-815-85	DIODE	1S1585			
D902	8-719-815-85	DIODE	1S1585			
D903	8-719-815-85	DIODE	1S1585			
D904	8-719-815-85	DIODE	1S1585			
		< IC >				
IC71	8-759-512-73	IC	LM35DZ-SL			
IC105	8-759-710-73	IC	NJM4580L			
IC106	8-759-634-50	IC	M5218AL			
IC107	8-759-634-50	IC	M5218AL			
IC116	8-759-634-50	IC	M5218AL			
IC118	8-759-805-13	IC	LC7821			
IC502	8-759-801-01	IC	LC4966			
		< TRANSISTOR >				
Q107	8-729-119-76	TRANSISTOR	2SA1175-HFE			
Q124	8-729-141-26	TRANSISTOR	2SC3622A-LK			
Q125	8-729-141-26	TRANSISTOR	2SC3622A-LK			
Q126	8-729-620-05	TRANSISTOR	2SC2603-EF			
Q127	8-729-620-05	TRANSISTOR	2SC2603-EF			
Q128	8-729-224-61	TRANSISTOR	2SK246-Y			
Q129	8-729-224-61	TRANSISTOR	2SK246-Y			
Q130	8-729-900-63	TRANSISTOR	DTA124ES			
Q131	8-729-900-36	TRANSISTOR	DTC124ES			
Q504	8-729-119-76	TRANSISTOR	2SA1175-HFE			
Q508	8-729-119-76	TRANSISTOR	2SA1175-HFE			
		< RESISTOR >				
R102	1-249-441-11	CARBON	100K	5%	1/4W(Germany)	
R103	1-249-416-11	CARBON	820	5%	1/4W(Germany)	
R104	1-247-897-11	CARBON	560K	5%	1/4W(Germany)	
R105	1-249-437-11	CARBON	47K	5%	1/4W(Germany)	
R106	1-249-417-11	CARBON	1K	5%	1/4W(Germany)	
R107	1-249-441-11	CARBON	100K	5%	1/4W(Germany)	
R108	1-249-405-11	CARBON	100	5%	1/4W	
R109	1-247-903-00	CARBON	1M	5%	1/4W	
R110	1-249-417-11	CARBON	1K	5%	1/4W	
R111	1-249-413-11	CARBON	470	5%	1/4W	

Ref. No.	Part No.	Description				Remarks
R113	1-247-903-00	CARBON	1M	5%	1/4W	
R114	1-249-417-11	CARBON	1K	5%	1/4W	
R115	1-249-417-11	CARBON	1K	5%	1/4W	
R116	1-247-903-00	CARBON	1M	5%	1/4W	
R117	1-249-417-11	CARBON	1K	5%	1/4W	
R118	1-247-903-00	CARBON	1M	5%	1/4W	
R119	1-247-903-00	CARBON	1M	5%	1/4W	
R120	1-249-417-11	CARBON	1K	5%	1/4W	
R121	1-249-437-11	CARBON	47K	5%	1/4W	
R123	1-249-441-11	CARBON	100K	5%	1/4W	
R124	1-249-437-11	CARBON	47K	5%	1/4W	
R125	1-249-437-11	CARBON	47K	5%	1/4W	
R126	1-249-437-11	CARBON	47K	5%	1/4W	
R127	1-249-441-11	CARBON	100K	5%	1/4W	
R128	1-249-417-11	CARBON	1K	5%	1/4W	
R131	1-249-417-11	CARBON	1K	5%	1/4W	
R133	1-249-429-11	CARBON	10K	5%	1/4W	
R152	1-249-441-11	CARBON	100K	5%	1/4W	
R153	1-249-416-11	CARBON	820	5%	1/4W	
R154	1-247-897-11	CARBON	560K	5%	1/4W	
R155	1-249-437-11	CARBON	47K	5%	1/4W	
R156	1-249-417-11	CARBON	1K	5%	1/4W	
R157	1-249-441-11	CARBON	100K	5%	1/4W	
R158	1-249-405-11	CARBON	100	5%	1/4W	
R159	1-249-417-11	CARBON	1K	5%	1/4W	
R160	1-247-903-00	CARBON	1M	5%	1/4W	
R161	1-249-413-11	CARBON	470	5%	1/4W	
R163	1-247-903-00	CARBON	1M	5%	1/4W	
R164	1-249-417-11	CARBON	1K	5%	1/4W	
R165	1-249-417-11	CARBON	1K	5%	1/4W	
R166	1-247-903-00	CARBON	1M	5%	1/4W	
R167	1-249-417-11	CARBON	1K	5%	1/4W	
R168	1-247-903-00	CARBON	1M	5%	1/4W	
R169	1-247-903-00	CARBON	1M	5%	1/4W	
R170	1-249-417-11	CARBON	1K	5%	1/4W	
R171	1-249-437-11	CARBON	47K	5%	1/4W	
R173	1-249-441-11	CARBON	100K	5%	1/4W	
R174	1-249-437-11	CARBON	47K	5%	1/4W	
R175	1-249-437-11	CARBON	47K	5%	1/4W	
R176	1-249-437-11	CARBON	47K	5%	1/4W	
R177	1-249-441-11	CARBON	100K	5%	1/4W	
R178	1-249-417-11	CARBON	1K	5%	1/4W	
R181	1-249-417-11	CARBON	1K	5%	1/4W	
R183	1-247-895-00	CARBON	470K	5%	1/4W	
R184	1-249-433-11	CARBON	22K	5%	1/4W	

INPUT | SP CONNECTION(B) | VIDEO AUDIO | SP TERMINAL | MAIN

Ref. No.	Part No.	Description				Remarks
R185	1-249-441-11	CARBON	100K	5%	1/4W	
R231	1-249-433-11	CARBON	22K	5%	1/4W	
R241	1-249-425-11	CARBON	4.7K	5%	1/4W	
R243	1-249-418-11	CARBON	1.2K	5%	1/4W	
R244	1-249-429-11	CARBON	10K	5%	1/4W	
R245	1-249-425-11	CARBON	4.7K	5%	1/4W	
R246	1-249-425-11	CARBON	4.7K	5%	1/4W	
R248	1-247-887-00	CARBON	220K	5%	1/4W	
R251	1-249-425-11	CARBON	4.7K	5%	1/4W	
R253	1-249-418-11	CARBON	1.2K	5%	1/4W	
R255	1-249-429-11	CARBON	10K	5%	1/4W	
R259	1-249-405-11	CARBON	100	5%	1/4W	
R260	1-249-405-11	CARBON	100	5%	1/4W	
R267	1-249-417-11	CARBON	1K	5%	1/4W	
R274	1-249-423-11	CARBON	3.3K	5%	1/4W	
R275	1-249-423-11	CARBON	3.3K	5%	1/4W	
R276	1-249-412-11	CARBON	390	5%	1/4W	
R277	1-249-412-11	CARBON	390	5%	1/4W	
R278	1-249-438-11	CARBON	56K	5%	1/4W	
R279	1-249-438-11	CARBON	56K	5%	1/4W	
R282	1-249-417-11	CARBON	1K	5%	1/4W	
R283	1-249-417-11	CARBON	1K	5%	1/4W	
R284	1-249-417-11	CARBON	1K	5%	1/4W	
R294	1-249-441-11	CARBON	100K	5%	1/4W	
R295	1-249-441-11	CARBON	100K	5%	1/4W	
R534	1-249-433-11	CARBON	22K	5%	1/4W	
R535	1-249-433-11	CARBON	22K	5%	1/4W	
R536	1-249-433-11	CARBON	22K	5%	1/4W	
R537	1-249-433-11	CARBON	22K	5%	1/4W	
R538	1-249-413-11	CARBON	470	5%	1/4W	
R552	1-247-903-00	CARBON	1M	5%	1/4W	
R553	1-249-417-11	CARBON	1K	5%	1/4W	
R554	1-249-417-11	CARBON	1K	5%	1/4W	
R555	1-247-903-00	CARBON	1M	5%	1/4W	
R556	1-249-417-11	CARBON	1K	5%	1/4W	
R557	1-247-903-00	CARBON	1M	5%	1/4W	
R558	1-249-417-11	CARBON	1K	5%	1/4W	
R559	1-247-903-00	CARBON	1M	5%	1/4W	
R572	1-247-903-00	CARBON	1M	5%	1/4W	
R573	1-249-417-11	CARBON	1K	5%	1/4W	
R574	1-249-417-11	CARBON	1K	5%	1/4W	
R575	1-247-903-00	CARBON	1M	5%	1/4W	
R576	1-249-417-11	CARBON	1K	5%	1/4W	
R577	1-247-903-00	CARBON	1M	5%	1/4W	
R578	1-249-417-11	CARBON	1K	5%	1/4W	
R579	1-247-903-00	CARBON	1M	5%	1/4W	
R901	1-249-435-11	CARBON	33K	5%	1/4W	
R902	1-249-435-11	CARBON	33K	5%	1/4W	
R903	1-249-435-11	CARBON	33K	5%	1/4W	
R904	1-249-435-11	CARBON	33K	5%	1/4W	
R905	1-247-727-11	CARBON	10	5%	1/2W	(Germany)
R906	1-247-727-11	CARBON	10	5%	1/2W	(Germany)
R907	1-247-727-11	CARBON	10	5%	1/2W	(Germany)
R908	1-247-727-11	CARBON	10	5%	1/2W	(Germany)

****

*	A-4345-214-A	MAIN AMPLIFIER BOARD, COMPLETE (AEP, Italian)				
		**********				
*	A-4345-230-A	MAIN AMPLIFIER BOARD, COMPLETE (UK)				
		**********				
*	A-4345-231-A	MAIN AMPLIFIER BOARD, COMPLETE (E, Saudi Arabia)				
		**********				
*	A-4345-215-A	MAIN AMPLIFIER BOARD, COMPLETE(Germany)				
		**********				
*	1-533-213-31	HOLDER, FUSE				
*	3-309-144-21	HEAT SINK				
*	4-880-403-11	HEAT SINK				
	7-682-548-04	SCREW +BVTT 3X8 (S)				
		< CAPACITOR >				
C15	1-124-478-11	ELECT	100uF	20%	25V	(EXCEPT. Germany)
C15	1-126-023-11	ELECT	100uF	20%	16V	(Germany)
C16	1-126-022-11	ELECT	47uF	20%	16V	(EXCEPT. Germany)
C16	1-124-478-11	ELECT	100uF	20%	25V	(Germany)
C19	1-161-379-00	CERAMIC	0.01uF	20%	25V	
C20	1-161-061-11	CERAMIC	0.068uF	10%	50V	
C41	1-102-394-11	CERAMIC	0.01uF		250V	
C71	1-161-494-00	CERAMIC	0.022uF		25V	
C72	1-161-494-00	CERAMIC	0.022uF		25V	

www.manualscenter.com

Ref. No.	Part No.	Description				Remarks
C101	1-126-105-11	ELECT	1000uF	20%	35V	
C102	1-126-105-11	ELECT	1000uF	20%	35V	
C103	1-128-334-11	ELECT	6800uF	20%	63V	
C104	1-128-334-11	ELECT	6800uF	20%	63V	
C105	1-102-394-11	CERAMIC	0.01uF		250V	
C106	1-102-394-11	CERAMIC	0.01uF		250V	
C107	1-126-059-11	ELECT	10uF	20%	50V	
C108	1-126-059-11	ELECT	10uF	20%	50V	
C109	1-124-120-11	ELECT	220uF	20%	25V	
C110	1-124-120-11	ELECT	220uF	20%	25V	
C111	1-126-059-11	ELECT	10uF	20%	50V	
C112	1-124-962-11	ELECT	2200uF	20%	25V	
C114	1-164-159-11	CERAMIC	0.1uF		50V	
C115	1-124-473-11	ELECT	1000uF	20%	10V	
C124	1-124-587-11	ELECT	220uF	20%	6.3V	
C125	1-124-587-11	ELECT	220uF	20%	6.3V	
C126	1-126-163-11	ELECT	4.7uF	20%	50V	
C127	1-161-494-00	CERAMIC	0.022uF		25V	
C159	1-162-282-31	CERAMIC	100PF	10%	50V	
C160	1-162-282-31	CERAMIC	100PF	10%	50V	
C161	1-124-994-11	ELECT	100uF	20%	10V	
C162	1-124-910-11	ELECT	47uF	20%	50V	
C163	1-124-916-11	ELECT	22uF	20%	63V	
C165	1-124-572-11	ELECT	100uF	20%	63V	
C167	1-136-163-00	FILM	0.068uF	5%	50V	
C189	1-162-282-31	CERAMIC	100PF	10%	50V	
C190	1-162-282-31	CERAMIC	100PF	10%	50V	
C191	1-124-994-11	ELECT	100uF	20%	10V	
C192	1-124-910-11	ELECT	47uF	20%	50V	
C193	1-124-572-11	ELECT	100uF	20%	63V	
C194	1-136-163-00	FILM	0.068uE	5%	50V	
C199	1-161-744-00	CERAMIC	0.01uF		400V	
C201	1-136-165-00	FILM	0.1uF	5%	50V	
C205	1-164-159-11	CERAMIC	0.1uF		50V	
C213	1-161-377-00	CERAMIC	0.0047uF	20%	50V	(Germany)
C214	1-161-377-00	CERAMIC	0.0047uF	20%	50V	(Germany)
C215	1-161-377-00	CERAMIC	0.0047uF	20%	50V	(Germany)
C216	1-161-377-00	CERAMIC	0.0047uF	20%	50V	(Germany)

Ref. No.	Part No.	Description				Remarks
C218	1-162-207-31	CERAMIC	22PF	5%	50V	
C219	1-162-207-31	CERAMIC	22PF	5%	50V	
C220	1-162-207-31	CERAMIC	22PF	5%	50V	
C221	1-162-207-31	CERAMIC	22PF	5%	50V	
C222	1-136-163-00	FILM	0.068uF	5%	50V	
C223	1-136-163-00	FILM	0.068uF	5%	50V	
C236	1-126-059-11	ELECT	10uF	20%	63V	
C256	1-124-443-00	ELECT	100uF	20%	10V	
C257	1-162-294-31	CERAMIC	0.001uF	10%	50V	
C258	1-162-294-31	CERAMIC	0.001uF	10%	50V	
C263	1-136-153-00	FILM	0.01uF	5%	50V	
C264	1-161-494-00	CERAMIC	0.022uF		25V	
C265	1-126-049-11	ELECT	22uF	20%	25V	
C281	1-164-159-11	CERAMIC	0.1uF		50V	
C922	1-161-379-00	CERAMIC	0.01uF	20%	25V	(Germany)
C924	1-164-159-11	CERAMIC	0.1uF		50V	
C925	1-161-379-00	CERAMIC	0.01uF	20%	25V	

< CONNECTOR >

CN103	* 1-565-439-11	PIN, CONNECTOR (PCB) 10P	
CN104	* 1-569-493-11	SOCKET, CONNECTOR 7P	
CN106	* 1-568-836-11	SOCKET, CONNECTOR 17P	
CN107	* 1-565-561-11	PIN, CONNECTOR 3P (AU BUS)	
CN114	* 1-564-321-00	PIN, CONNECTOR 2P (AEP, E, Germany, Italian, Saudi Arabia)	
CN183	* 1-569-491-11	SOCKET, CONNECTOR 5P	
CN186	* 1-569-493-11	SOCKET, CONNECTOR 7P	
CN188	* 1-569-496-11	SOCKET, CONNECTOR 10P	
CN189	* 1-569-496-11	SOCKET, CONNECTOR 10P	
CN193	1-569-490-11	SOCKET, CONNECTOR 3P	

< DIODE >

D71	8-719-912-20	DIODE	1SS120
D101	8-719-302-38	DIODE	RBV-602-01
D105	8-719-912-20	DIODE	1SS120
D107	8-719-000-84	DIODE	UZL-7M1
D109	8-719-815-85	DIODE	1S1585
D110	8-719-815-85	DIODE	1S1585
D111	8-719-815-85	DIODE	1S1585
D112	8-719-815-85	DIODE	1S1585
D115	8-719-912-20	DIODE	1SS120
D116	8-719-200-82	DIODE	11ES2

MAIN

Ref. No.	Part No.	Description	Remarks
D117	8-719-200-77	DIODE 10E2N	
D118	8-719-200-77	DIODE 10E2N	
D119	8-719-200-77	DIODE 10E2N	
D120	8-719-200-77	DIODE 10E2N	
D122	8-719-912-20	DIODE 1SS120	
D135	8-719-815-85	DIODE 1S1585	
D150	8-719-200-77	DIODE 10E2N	
D151	8-719-200-77	DIODE 10E2N	
D152	8-719-200-77	DIODE 10E2N	
D153	8-719-200-77	DIODE 10E2N	
D158	8-719-010-17	DIODE UZ-3.0BSB	
D401	8-719-815-85	DIODE 1S1585	
D402	8-719-912-20	DIODE 1SS120	
D905	8-719-815-85	DIODE 1S1585	
		< IC >	
IC101	8-759-604-34	IC M5F7815L	
IC102	8-759-245-87	IC TA7915S	
IC103	8-759-630-49	IC M5F7806KL	
IC108	8-759-984-03	IC LM339N	
IC112	8-759-111-68	IC uPC1237HA	
IC113	8-749-921-04	IC STK4211MK2(AEP, UK, Germany, Italian)	
IC113	8-749-922-65	IC STK4221MK2 (E, Saudi Arabia)	
IC115	8-759-635-63	IC M51943BSL	
ICP106	1-532-842-11	IC, LINK	
ICP107	1-532-842-11	IC, LINK	
ICP109	1-532-842-11	IC, LINK	
		< TRANSISTOR >	
Q101	8-729-620-05	TRANSISTOR 2SC2603-EF	
Q102	8-729-900-63	TRANSISTOR DTA124ES	
Q106	8-729-900-36	TRANSISTOR DTC124ES	
Q112	8-729-140-84	TRANSISTOR 2SC1841-PAFAEA	
Q113	8-729-140-84	TRANSISTOR 2SC1841-PAFAEA	
Q121	8-729-900-63	TRANSISTOR DTA124ES	
Q123	8-729-801-93	TRANSISTOR 2SD1387	
Q141	8-729-801-93	TRANSISTOR 2SD1387	
Q408	8-729-620-05	TRANSISTOR 2SC2603-EF	
		< RESISTOR >	
R18	1-247-887-00	CARBON 220K 5% 1/4W	
R19	1-249-433-11	CARBON 22K 5% 1/4W	
R20	1-249-433-11	CARBON 22K 5% 1/4W	
R21	⚠1-215-885-00	METAL OXIDE 68 5% 2W	F
R71	1-249-421-11	CARBON 2.2K 5% 1/4W	

Ref. No.	Part No.	Description	Remarks
R72	1-249-429-11	CARBON 10K 5% 1/4W	
R73	1-247-858-11	CARBON 13K 5% 1/4W (AEP, UK, Germany, Italian)	
R73	1-249-431-11	CARBON 15K 5% 1/4W (E, Saudi Arabia)	
R74	1-249-442-11	CARBON 510 5% 1/4W (AEP, UK, Germany, Italian)	
R74	1-249-415-11	CARBON 680 5% 1/4W (E, Saudi Arabia)	
R134	1-249-429-11	CARBON 10K 5% 1/4W	
R136	1-249-417-11	CARBON 1K 5% 1/4W	
R137	1-247-874-11	CARBON 62K 5% 1/4W	
R138	1-249-412-11	CARBON 390 5% 1/4W	
R139	1-247-874-11	CARBON 62K 5% 1/4W	
R140	1-247-760-11	CARBON 4.7K 5% 1/2W	
R141	1-247-760-11	CARBON 4.7K 5% 1/2W	
R142	1-247-752-11	CARBON 1K 5% 1/2W	
R143	1-247-752-11	CARBON 1K 5% 1/2W	
R144	⚠1-212-881-11	FUSIBLE 100 5% 1/4W	F
R145	1-249-417-11	CARBON 1K 5% 1/4W	
R146	1-249-431-11	CARBON 15K 5% 1/4W	
R147	1-217-156-00	RES, METAL PLATE 0.22	
R148	1-249-441-11	CARBON 100K 5% 1/4W	
R149	⚠1-212-881-11	FUSIBLE 100 5% 1/4W	F
R150	1-247-727-11	CARBON 10 5% 1/2W	
R186	1-249-417-11	CARBON 1K 5% 1/4W	
R187	1-247-874-11	CARBON 62K 5% 1/4W	
R188	1-249-412-11	CARBON 390 5% 1/4W	
R189	1-247-874-11	CARBON 62K 5% 1/4W	
R190	1-247-760-11	CARBON 4.7K 5% 1/2W	
R191	1-247-760-11	CARBON 4.7K 5% 1/2W	
R192	1-249-417-11	CARBON 1K 5% 1/4W	
R193	1-249-431-11	CARBON 15K 5% 1/4W	
R194	1-249-441-11	CARBON 100K 5% 1/4W	
R195	1-247-727-11	CARBON 10 5% 1/2W	
R196	1-249-437-11	CARBON 47K 5% 1/4W	
R197	1-217-156-00	RES, METAL PLATE 0.22	
R202	⚠1-216-457-00	METAL OXIDE 1.2K 5% 2W	F
R203	1-249-427-11	CARBON 6.8K 5% 1/4W	
R204	1-249-427-11	CARBON 6.8K 5% 1/4W	
R205	1-249-437-11	CARBON 47K 5% 1/4W	
R206	1-249-441-11	CARBON 100K 5% 1/4W	
R207	1-249-429-11	CARBON 10K 5% 1/4W	
R210	1-249-438-11	CARBON 56K 5% 1/4W	

Note: The components identified by mark ⚠ or dotted line with mark ⚠ are critical for safety. Replace only with part number specified.

www.manualscenter.com

MAIN | PANEL | SP CONNECTION(A) | HEADPHONE | MICROPHONE | VOLUME

Ref. No.	Part No.	Description				Remarks
R219	1-249-437-11	CARBON	47K	5%	1/4W	
R226	1-247-834-11	CARBON	1.3K	5%	1/4W	
R227	1-249-410-11	CARBON	270	5%	1/4W	
R228	1-249-431-11	CARBON	15K	5%	1/4W	
R229	1-249-425-11	CARBON	4.7K	5%	1/4W	
R238	1-249-425-11	CARBON	4.7K	5%	1/4W	
R239	1-249-429-11	CARBON	10K	5%	1/4W	
R240	1-249-417-11	CARBON	1K	5%	1/4W	
R256	1-249-433-11	CARBON	22K	5%	1/4W	
R258	⚠1-212-968-00	FUSIBLE	27	5%	1/2W	F
R265	1-249-423-11	CARBON	3.3K	5%	1/4W	
R268	1-249-423-11	CARBON	3.3K	5%	1/4W	
R269	1-249-421-11	CARBON	2.2K	5%	1/4W	
R270	1-249-441-11	CARBON	100K	5%	1/4W	
R271	1-249-423-11	CARBON	3.3K	5%	1/4W	
R272	1-249-417-11	CARBON	1K	5%	1/4W	
R280	1-249-441-11	CARBON	100K	5%	1/4W	
R285	⚠1-214-789-00	RES, METAL PLATE	0.1	10%	5W	(E, Saudi Arabia)
R286	⚠1-214-789-00	RES, METAL PLATE	0.1	10%	5W	(E, Saudi Arabia)
R287	⚠1-214-789-00	RES, METAL PLATE	0.1	10%	5W	(E, Saudi Arabia)
R288	⚠1-214-789-00	RES, METAL PLATE	0.1	10%	5W	(E, Saudi Arabia)
R289	⚠1-214-789-00	RES, METAL PLATE	0.1	10%	5W	(E, Saudi Arabia)
R290	⚠1-214-789-00	RES, METAL PLATE	0.1	10%	5W	(E, Saudi Arabia)
R291	⚠1-214-789-00	RES, METAL PLATE	0.1	10%	5W	(E, Saudi Arabia)
R292	⚠1-214-789-00	RES, METAL PLATE	0.1	10%	5W	(E, Saudi Arabia)
R402	1-249-393-11	CARBON	10	5%	1/4W	
R403	1-249-425-11	CARBON	4.7K	5%	1/4W	
R404	1-249-429-11	CARBON	10K	5%	1/4W	
		< RELAY >				
RY101	1-515-765-11	RELAY				
		< SWITCH >				
S101	⚠1-554-920-51	SWITCH, PUSH (AC POWER)(1 KEY)				

****

* A-4345-228-A	PANEL BOARD, COMPLETE	
	**********	
* 1-639-406-11	SP CONNECTION (A) BOARD	
	**********	
* 1-639-407-11	HEADPHONE BOARD	
	**********	
* 1-639-408-11	MICROPHONE BOARD	
	**********	
* 1-639-410-11	VOLUME BOARD	
	**********	

Ref. No.	Part No.	Description				Remarks
* 4-942-010-01	HOLDER (1 GANG)					
* 4-942-012-01	HOLDER (3 GANG), LED					
	< CAPACITOR >					
C158	1-126-059-11	ELECT	10uF	20%	50V	
C188	1-126-059-11	ELECT	10uF	20%	50V	
C301	1-126-059-11	ELECT	10uF	20%	50V	
C302	1-126-059-11	ELECT	10uF	20%	50V	
C303	1-126-022-11	ELECT	47uF	20%	16V	
C304	1-126-059-11	ELECT	10uF	20%	50V	
C305	1-126-059-11	ELECT	10uF	20%	50V	
C307	1-161-494-00	CERAMIC	0.022uF		25V	
C309	1-161-494-00	CERAMIC	0.022uF		25V	
C310	1-126-022-11	ELECT	47uF	20%	16V	
C312	1-161-494-00	CERAMIC	0.022uF		25V	
C401	1-161-494-00	CERAMIC	0.022uF		25V	
C402	1-161-494-00	CERAMIC	0.022uF		25V	
C403	1-161-494-00	CERAMIC	0.022uF		25V	
C404	1-125-486-11	DUBLE LAYERS	0.22F		5.5V	
C405	1-126-049-11	ELECT	22uF	20%	25V	
C406	1-161-494-00	CERAMIC	0.022uF		25V	
C407	1-136-153-00	FILM	0.01uF	5%	50V	
C408	1-164-159-11	CERAMIC	0.1uF		50V	
C409	1-161-494-00	CERAMIC	0.022uF		25V	
C480	1-136-165-00	FILM	0.1uF	5%	50V	
C481	1-136-153-00	FILM	0.01uF	5%	50V	
C486	1-161-494-00	CERAMIC	0.022uF		25V	
C487	1-162-294-31	CERAMIC	0.001uF	10%	50V	
C501	1-124-471-00	ELECT	1000uF	20%	6.3V	
C502	1-126-059-11	ELECT	10uF	20%	50V	
C503	1-124-471-00	ELECT	1000uF	20%	6.3V	
C504	1-126-059-11	ELECT	10uF	20%	50V	
C505	1-124-471-00	ELECT	1000uF	20%	6.3V	
C506	1-126-059-11	ELECT	10uF	20%	50V	
C508	1-126-059-11	ELECT	10uF	20%	50V	
C509	1-126-049-11	ELECT	22uF	20%	25V	
C510	1-161-494-00	CERAMIC	0.022uF		25V	
C701	1-126-049-11	ELECT	22uF	20%	25V	
C703	1-126-161-11	ELECT	2.2uF	20%	50V	
C704	1-161-377-00	CERAMIC	0.0047uF	30%	16V	
C705	1-162-219-31	CERAMIC	68PF	5%	50V	
C706	1-162-290-31	CERAMIC	470PF	10%	50V	
C707	1-161-377-00	CERAMIC	0.0047uF	30%	16V	
C708	1-162-293-31	CERAMIC	820PF	10%	50V	

Note: The components identified by mark ⚠ or dotted line with mark ⚠ are critical for safety. Replace only with part number specified.

PANEL | SP CONNECTION(A) | HEADPHONE | MICROPHONE | VOLUME

Ref. No.	Part No.	Description				Remarks
C709	1-124-463-00	ELECT	0.1uF	20%	50V	
C710	1-126-049-11	ELECT	22uF	20%	25V	
C711	1-126-049-11	ELECT	22uF	20%	25V	
C721	1-162-286-31	CERAMIC	220PF	10%	50V (Germany)	
C751	1-126-049-11	ELECT	22uF	20%	25V	
C752	1-162-286-31	CERAMIC	220PF	10%	50V (Germany)	
C801	1-126-022-11	ELECT	47uF	20%	16V	
C802	1-126-059-11	ELECT	10uF	20%	50V	
C803	1-126-059-11	ELECT	10uF	20%	50V	
		< CONNECTOR >				
CN1	* 1-564-506-11	PLUG, CONNECTOR 3P				
CN180	* 1-569-506-11	PIN, CONNECTOR 11P				
CN194	* 1-569-506-11	PIN, CONNECTOR 11P				
CN195	1-569-497-11	SOCKET, CONNECTOR 11P				
CN401	* 1-568-836-11	SOCKET, CONNECTOR 17P				
CN403	* 1-568-824-11	SOCKET, CONNECTOR 5P				
CN462	* 1-568-320-11	PLUG, CONNECTOR 8P				
CN551	* 1-569-502-11	PIN, CONNECTOR 7P				
CN701	* 1-565-438-11	SOCKET, CONNECTOR (PCB) 10P				
CN801	* 1-564-496-11	PIN, CONNECTOR 3P				
CN803	* 1-564-519-11	PLUG, CONNECTOR 4P				
CN809	1-568-319-11	SOCKET, CONNECTOR 8P				
CNJ503	1-565-351-21	JACK, PIN 3P (VIDEO 1 IN, DBS IN)				
CNJ504	1-565-351-21	JACK, PIN 3P (VIDEO 2 IN, MONITOR OUT)				
CNJ702	1-580-174-21	JACK, PIN (3P FRONT) (VIDEO 3 IN)				
		< DIODE >				
D302	8-719-200-82	DIODE	11ES2			
D303	8-719-200-82	DIODE	11ES2			
D403	8-719-200-82	DIODE	11ES2			
D405	8-719-200-82	DIODE	11ES2			
D406	8-719-912-20	DIODE	1SS120			
D407	8-719-200-82	DIODE	11ES2			
D415	8-719-200-82	DIODE	11ES2			
D463	8-719-301-39	DIODE	SEL2210S-D			
D471	8-719-301-39	DIODE	SEL2210S-D			
D472	8-719-301-39	DIODE	SEL2210S-D			
D473	8-719-301-39	DIODE	SEL2210S-D			
D501	8-719-200-82	DIODE	11ES2			
D801	8-719-200-82	DIODE	11ES2			

Ref. No.	Part No.	Description		Remarks
		< IC >		
IC301	8-759-962-08	IC	BA6208	
IC302	8-759-962-08	IC	BA6208	
IC303	8-759-208-06	IC	TC4051BPHB	
IC304	8-759-000-48	IC	MC14052BCP	
IC401	8-759-154-28	IC	uPD75106CW-190	
IC402	8-759-991-02	IC	NE555P	
IC501	8-759-991-77	IC	BA7625	
IC701	8-759-710-73	IC	NJM4580L	
IC801	8-759-820-62	IC	LB1639	
		< JACK >		
J601	1-507-796-71	JACK (HEADPHONES)		
J701	1-580-439-11	JACK, LARGE TYPE (MIC)		
		< COIL >		
L101	* 1-420-872-00	COIL, AIR CORE		
L102	* 1-420-872-00	COIL, AIR CORE		
L501	1-410-521-11	INDUCTOR	100uH	
		< TRANSISTOR >		
Q409	8-729-900-63	TRANSISTOR	DTA124ES	
Q410	8-729-620-05	TRANSISTOR	2SC2603-EF	
Q411	8-729-900-63	TRANSISTOR	DTA124ES	
Q412	8-729-900-63	TRANSISTOR	DTA124ES	
Q413	8-729-900-63	TRANSISTOR	DTA124ES	
Q501	8-729-119-77	TRANSISTOR	2SA1175-FEK	
Q502	8-729-119-77	TRANSISTOR	2SA1175-FEK	
Q503	8-729-119-77	TRANSISTOR	2SA1175-FEK	
Q506	8-729-620-05	TRANSISTOR	2SC2603-EF	
		< RESISTOR >		
R51	1-249-441-11	CARBON	100K 5% 1/4W	
R52	1-249-441-11	CARBON	100K 5% 1/4W	
R53	1-249-441-11	CARBON	100K 5% 1/4W	
R224	1-247-727-11	CARBON	10 5% 1/2W	
R225	1-247-749-11	CARBON	560 5% 1/2W	
R301	1-249-429-11	CARBON	10K 5% 1/4W	
R302	1-249-429-11	CARBON	10K 5% 1/4W	
R303	1-249-429-11	CARBON	10K 5% 1/4W	
R304	1-249-429-11	CARBON	10K 5% 1/4W	
R305	1-249-429-11	CARBON	10K 5% 1/4W	

www.manualscenter.com

PANEL | SP CONNECTION(A) | HEADPHONE | MICROPHONE | VOLUME

Ref. No.	Part No.	Description				Remarks
R311	1-249-433-11	CARBON	22K	5%	1/4W	
R312	1-249-410-11	CARBON	270	5%	1/4W	
R313	1-249-433-11	CARBON	22K	5%	1/4W	
R314	1-249-433-11	CARBON	22K	5%	1/4W	
R315	1-249-433-11	CARBON	22K	5%	1/4W	
R316	1-249-433-11	CARBON	22K	5%	1/4W	
R317	1-249-433-11	CARBON	22K	5%	1/4W	
R318	1-249-433-11	CARBON	22K	5%	1/4W	
R319	1-249-433-11	CARBON	22K	5%	1/4W	
R320	1-249-410-11	CARBON	270	5%	1/4W	
R321	1-249-433-11	CARBON	22K	5%	1/4W	
R322	1-249-433-11	CARBON	22K	5%	1/4W	
R394	1-249-421-11	CARBON	2.2K	5%	1/4W	
R395	1-249-421-11	CARBON	2.2K	5%	1/4W	
R396	1-249-421-11	CARBON	2.2K	5%	1/4W	
R397	1-249-421-11	CARBON	2.2K	5%	1/4W	
R399	1-249-429-11	CARBON	10K	5%	1/4W	
R405	1-249-417-11	CARBON	1K	5%	1/4W	
R406	1-249-433-11	CARBON	22K	5%	1/4W	
R407	1-249-417-11	CARBON	1K	5%	1/4W	
R408	1-249-414-11	CARBON	560	5%	1/4W	
R412	1-249-417-11	CARBON	1K	5%	1/4W	
R413	1-249-417-11	CARBON	1K	5%	1/4W	
R414	1-249-433-11	CARBON	22K	5%	1/4W	
R415	1-249-433-11	CARBON	22K	5%	1/4W	
R416	1-249-429-11	CARBON	10K	5%	1/4W	
R417	1-249-433-11	CARBON	22K	5%	1/4W	
R418	1-249-433-11	CARBON	22K	5%	1/4W	
R419	1-249-433-11	CARBON	22K	5%	1/4W	
R420	1-249-417-11	CARBON	1K	5%	1/4W	
R421	1-249-437-11	CARBON	47K	5%	1/4W	
R422	1-249-435-11	CARBON	33K	5%	1/4W	
R423	1-249-433-11	CARBON	22K	5%	1/4W	
R434	1-249-429-11	CARBON	10K	5%	1/4W	
R435	1-249-429-11	CARBON	10K	5%	1/4W	
R436	1-249-429-11	CARBON	10K	5%	1/4W	
R437	1-249-429-11	CARBON	10K	5%	1/4W	
R438	1-249-429-11	CARBON	10K	5%	1/4W	
R439	1-249-429-11	CARBON	10K	5%	1/4W	
R440	1-249-410-11	CARBON	270	5%	1/4W	
R441	1-249-410-11	CARBON	270	5%	1/4W	
R442	1-249-410-11	CARBON	270	5%	1/4W	
R443	1-249-429-11	CARBON	10K	5%	1/4W	
R445	1-249-410-11	CARBON	270	5%	1/4W	
R446	1-249-429-11	CARBON	10K	5%	1/4W	

Ref. No.	Part No.	Description				Remarks
R448	1-249-429-11	CARBON	10K	5%	1/4W	
R450	1-249-417-11	CARBON	1K	5%	1/4W	
R459	1-247-903-00	CARBON	1M	5%	1/4W	
R461	1-249-417-11	CARBON	1K	5%	1/4W	
R471	1-249-417-11	CARBON	1K	5%	1/4W	
R480	1-247-885-00	CARBON	180K	5%	1/4W	
R481	1-249-438-11	CARBON	56K	5%	1/4W	
R482	1-249-429-11	CARBON	10K	5%	1/4W	
R484	1-249-429-11	CARBON	10K	5%	1/4W	
R485	1-249-429-11	CARBON	10K	5%	1/4W	
R486	1-249-424-11	CARBON	3.9K	5%	1/4W	
R490	1-249-417-11	CARBON	1K	5%	1/4W	
R491	1-249-417-11	CARBON	1K	5%	1/4W	
R492	1-249-417-11	CARBON	1K	5%	1/4W	
R493	1-249-417-11	CARBON	1K	5%	1/4W	
R496	1-249-417-11	CARBON	1K	5%	1/4W	
R498	1-249-417-11	CARBON	1K	5%	1/4W	
R499	1-249-417-11	CARBON	1K	5%	1/4W	
R501	1-249-403-11	CARBON	68	5%	1/4W	
R502	1-249-429-11	CARBON	10K	5%	1/4W	
R503	1-247-804-11	CARBON	75	5%	1/4W	
R504	1-249-429-11	CARBON	10K	5%	1/4W	
R505	1-249-403-11	CARBON	68	5%	1/4W	
R506	1-247-804-11	CARBON	75	5%	1/4W	
R507	1-249-429-11	CARBON	10K	5%	1/4W	
R508	1-249-403-11	CARBON	68	5%	1/4W	
R509	1-247-804-11	CARBON	75	5%	1/4W	
R511	1-249-408-11	CARBON	180	5%	1/4W	
R512	1-249-408-11	CARBON	180	5%	1/4W	
R513	1-249-408-11	CARBON	180	5%	1/4W	
R514	1-249-408-11	CARBON	180	5%	1/4W	
R515	1-249-408-11	CARBON	180	5%	1/4W	
R516	1-249-408-11	CARBON	180	5%	1/4W	
R517	1-249-417-11	CARBON	1K	5%	1/4W	
R518	1-249-417-11	CARBON	1K	5%	1/4W	
R520	1-249-433-11	CARBON	22K	5%	1/4W	
R521	1-249-433-11	CARBON	22K	5%	1/4W	
R531	1-249-429-11	CARBON	10K	5%	1/4W	
R601	1-247-727-11	CARBON	10	5%	1/2W	
R651	1-247-749-11	CARBON	560	5%	1/2W	
R701	1-249-417-11	CARBON	1K	5%	1/4W	
R702	1-247-903-00	CARBON	1M	5%	1/4W	
R703	1-247-804-11	CARBON	75	5%	1/4W	
R704	1-249-441-11	CARBON	100K	5%	1/4W	
R705	1-249-417-11	CARBON	1K	5%	1/4W	

PANEL | SP CONNECTION(A) | HEADPHONE | MICROPHONE | VOLUME

Ref. No.	Part No.	Description	Remarks
R706	1-249-429-11	CARBON 10K 5% 1/4W	
R707	1-249-432-11	CARBON 18K 5% 1/4W	
R708	1-249-417-11	CARBON 1K 5% 1/4W	
R709	1-249-417-11	CARBON 1K 5% 1/4W	
R710	1-249-432-11	CARBON 18K 5% 1/4W	
R711	1-249-417-11	CARBON 1K 5% 1/4W	
R751	1-249-417-11	CARBON 1K 5% 1/4W	
R752	1-247-903-00	CARBON 1M 5% 1/4W	
R801	1-249-425-11	CARBON 4.7K 5% 1/4W	
R802	1-249-410-11	CARBON 270 5% 1/4W	
R803	1-249-417-11	CARBON 1K 5% 1/4W	
R804	1-249-417-11	CARBON 1K 5% 1/4W	
R805	1-247-834-11	CARBON 1.3K 5% 1/4W	
R806	1-249-415-11	CARBON 680 5% 1/4W	
R807	1-249-429-11	CARBON 10K 5% 1/4W	
R809	1-249-429-11	CARBON 10K 5% 1/4W	
		< VARIABLE RESISTOR >	
RV401	1-241-307-11	RES, VAR, CAREBON 10K/10K (DBFB-LEVEL)	
RV501	1-238-459-11	RES, VAR, CARBON 100K (BALANCE)	
RV701	1-241-301-11	RES, VAR, CARBON 50K (LEVEL)	
RV801	1-238-708-11	RES, VAR, CARBON 10K/100K/100K (VOLUME)	
		< SWITCH >	
FC301	1-572-460-11	SWITCH, ROTARY (AUDIO FUNCTION)	
FC302	1-572-554-11	SWITCH, ROTARY (VIDEO FUNCTION)	
S103	1-571-987-11	SWITCH, PUSH (2 KEY) (SPEAKER A/B)	
S401	1-554-303-21	SWITCH, TACTILE (SET)	
S402	1-554-303-21	SWITCH, TACTILE (PROG 1)	
S403	1-554-303-21	SWITCH, TACTILE (PROG 2)	
S404	1-554-303-21	SWITCH, TACTILE (PROG 3)	
S405	1-554-303-21	SWITCH, TACTILE (PROG 4)	
		< VIBRATOR >	
X401	1-577-359-21	VIBRATOR, CERAMIC	

****

MISCELLANEOUS
****

Ref. No.	Part No.	Description	Remarks
10	1-690-100-11	WIRE, FLAT TYPE (5 CORE)	
11	1-690-102-11	WIRE, FLAT TYPE (17 CORE)	
18	1-541-889-11	MOTOR, DC FAN	
62	1-690-101-11	WIRE, FLAT TYPE (7 CORE)	
CN199	⚠1-526-751-00	OUTLET, AC(UK)	
CN199	⚠1-526-794-11	OUTLET, AC(AEP, Germany, Italian, Saudi Arabia)	
CN199	⚠1-526-882-00	OUTLET, AC(E)	
CNP901	⚠1-556-560-21	CORD, POWER(UK)	
CNP901	⚠1-575-651-11	CORD, POWER(AEP, Germany, Italian)	
CNP901	⚠1-575-654-11	CORD, POWER(Saudi Arabia)	
CNP901	⚠1-575-656-11	CORD, POWER(E)	
F101	⚠1-532-388-51	FUSE (2A)	
F102	⚠1-532-388-51	FUSE (2A) (EXCEPT UK)	
S102	⚠1-570-307-11	SWITCH, VOLTAGE CHANGE (E, Saudi Arabia)	
T101	⚠1-450-526-11	TRANSFORMER, POWER (AEP, UK, Germany, Italian)	
T101	⚠1-450-527-11	TRANSFORMER, POWER (E, Saudi Arabia)	

****

ACCESSORY & PACKING MATERIAL
****

	3-701-630-00	BAG, POLYETHYLENE (Italian)
	3-753-427-11	MANUAL, INSTRUCTION (English, French, Spanish, portuguese) AEP
	3-753-427-41	MANUAL, INSTRUCTION (German, Dutch, Swedish, Italian)AEP, Germany, Italian
	4-920-940-01	SHEET (A), PROTECTION
*	4-946-088-01	INDIVIDUAL CARTON (AEP, Germany, Italian)
*	4-946-092-01	CUSHION

****

HARDWARE LIST
****

# 1	7-621-773-93	SCREW (PANEL 2.6 TP2)
# 2	7-685-646-79	SCREW +BVTP 3X8 TYPE2 IT-3
# 3	7-685-647-79	SCREW +BVTP 3X10 TYPE2 N-S
# 4	7-685-650-79	SCREW +BVTP 3X16 TYPE2 IT-3
# 5	7-682-547-04	SCREW +BVTT 3X6 (S)
# 6	7-682-547-09	SCREW +BVTT 3X6 (S)
# 7	7-682-560-04	SCREW +BVTT 4X6 (S)
# 8	7-682-548-04	SCREW +BVTT 3X8 (S)
# 9	7-621-849-00	SCREW, TAPPING
#10	7-685-534-19	SCREW +BTP 2.6X8 TYPE2 N-S (E, Saudi Arabia)

Note: The components identified by mark ⚠ or dotted line with mark ⚠ are critical for safety. Replace only with part number specified.

www.manualscenter.com

9-956-410-11

Sony Corporation
Audio Group

English
91E1669-1
Printed in Japan
©1991.5
Published by Customer Relations and Service Group