SONY -09616

MHC-5600

SONY
SERVICE MANUAL

	MHC-5600	FHE-939CD
Amplifier	TA-H5600	TA-H5600
CD Player	CDP-H6600	CDP-H6600
Tuner	ST-H6600	#
Cassette deck	TC-H5600	TC-H5600
Speaker System	SS-H6600	SS-H6600

SONY-04779

TA-H5600/H6600

SERVICE MANUAL

AEP Model
UK Model

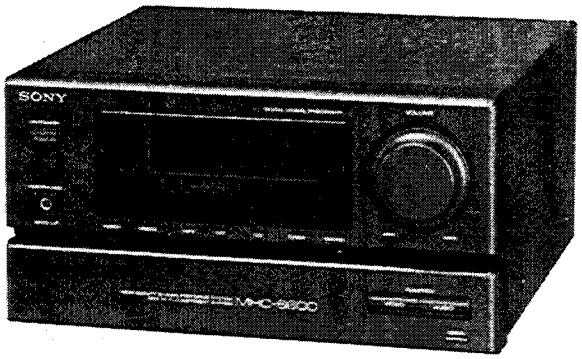

This unit is the Amplifier for the MHC-5600/6600 component system.

Photo is TA-H6600

SPECIFICATIONS

Continuous RMS power output
For satellite speaker:
28 + 28 W (8 chms at 1 kHz, DIN)
33 + 33 W (8 ohms at 1 kHz, 5% THD)
For bass speaker:
32 + 32 W (6 ohms at 110 Hz, DIN)
37 + 37 W (6 ohms at 110 Hz, 5% THD)

Music power output (for AEP and U.K.model)
For satellite speaker:
44 + 44 W (8 ohms at 1 kHz, 10% THD)
For bass speaker:
48 + 48 W (6 ohm at 110 Hz, 10% THD)

Peak music power output (EXCEPT AEP, UK)
550 W

Inputs
ADAPTOR (pin jacks):
sensitivity 260 mV
impedance 47 kilohms

Outputs
HEADPHONES (stereo minijack):
accepts headphones of 8 ohms or more.
ADAPTOR (pin jacks)
output level 260 mV
impedance 1 kilohms
SPEAKER (SATELLITE):
accepts speakers of 8 to 16 ohms.
SPEAKER (BASS):
accepts speakers of 6 to 16 ohms

STEREO AMPLIFIER

SONY®

TABLE OF CONTENTS

SAFETY-RELATED COMPONENT WARNING!!

COMPONENTS IDENTIFIED BY MARK ⚠ OR DOTTED LINE WITH MARK ⚠ ON THE SCHEMATIC DIAGRAMS AND IN THE PARTS LIST ARE CRITICAL TO SAFE OPERATION. REPLACE THESE COMPONENTS WITH SONY PARTS WHOSE PART NUMBERS APPEAR AS SHOWN IN THIS MANUAL OR IN SUPPLEMENTS PUBLISHED BY SONY.

Notes on chip component replacement

- Never reuse a disconnected chip component.
- Notice that the minus side of a tantalum capacitor may be damaged by heat.

Flexible Circuit Board Repairing

- Keep the temperature of the soldering iron around 270°C during repairing.
- Do not touch the soldering iron on the same conductor of the circuit board (within 3 times).
- Be careful not to apply force on the conductor when soldering or unsoldering.

MODEL IDENTIFICATION

– Specification Label –

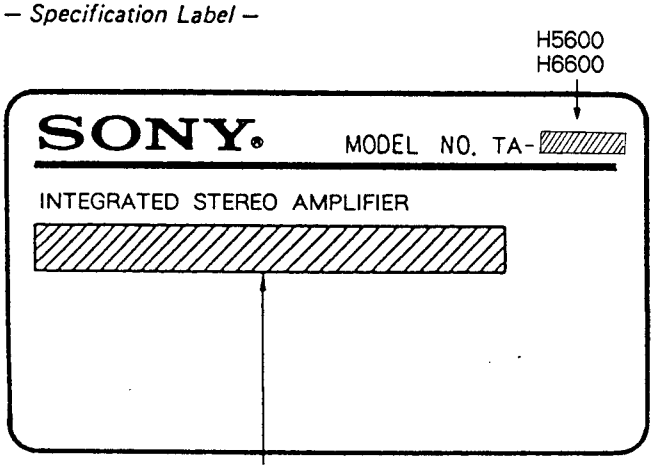

AEP, Germany Model : AC 220V~50/60Hz
Italian Model : AC 220V~50/60Hz
UK Model : AC 240V~50/60Hz

SECTION 1
GENERAL

This section is extracted from instruction manual.

LOCATION AND FUNCTION CONTROLS

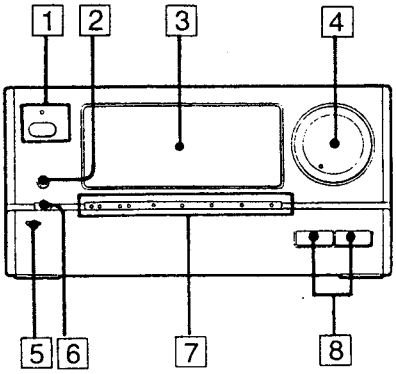

1 SYSTEM POWER switch and STANDBY indicator
The indicator remains lit as long as the AC power cord is connected to a wall outlet.
2 HEADPHONES jack (stereo minijack) 00
3 Display window
4 VOLUME control 28
5 OPEN tab
6 WAKE UP indicator 84
7 Function indicators X: 20 88
8 VIDEO and AUDIO FUNCTION selectors 20 88

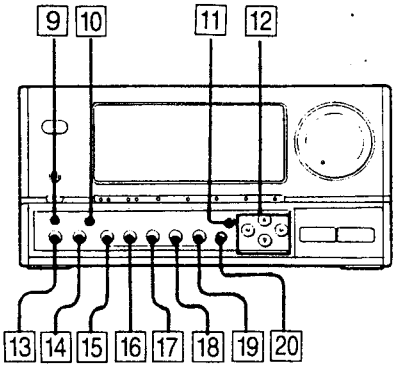

9 WAKE UP button 84
10 DISPLAY button 78
11 MEMORY button 56
12 CURSOR CONTROL button
13 DBFB (Dynamic Bass Feedback) button 26
14 BALANCE button 29
15 DSP button 72
16 PRESET buttons 74
17 DYNAMIC SOUND button 84
18 PARAMETRIC EQUALIZER button 80
19 PRESENCE SURROUND button 82
20 ON/OFF button 28 60 62 84

Audio Adjustment

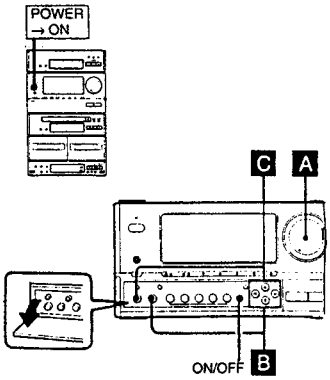

Volume Adjustment A

Turn VOLUME clockwise to increase the sound level, or counterclockwise to decrease it.
(Or press + or – on the remote commander.)

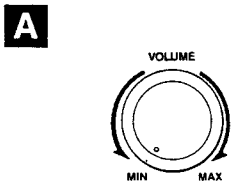

Balance Adjustment B

Adjust the balance of the speakers to correct the stereo imaging when the speaker position is not symmetrical.

1 Press BALANCE.

2 Adjust with CURSOR CONTROL ◄ or ►.

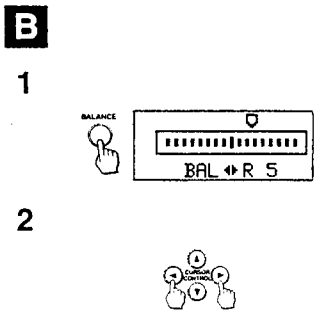

Reinforcing Bass – DBFB* C

1 Press DBFB.

2 Adjust with CURSOR CONTROL ▲ or ▼.
The more you press ▲, the more the bass is emphasized.

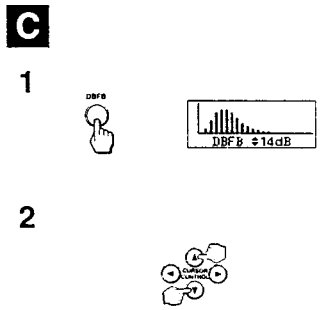

When you do not want to apply the DBFB effect
Press ON/OFF.

*DBFB = Dynamic bass feedback

For personal listening
Connect headphones to HEADPHONES.
No sound comes from the speakers.

Using the Digital Sound Effects

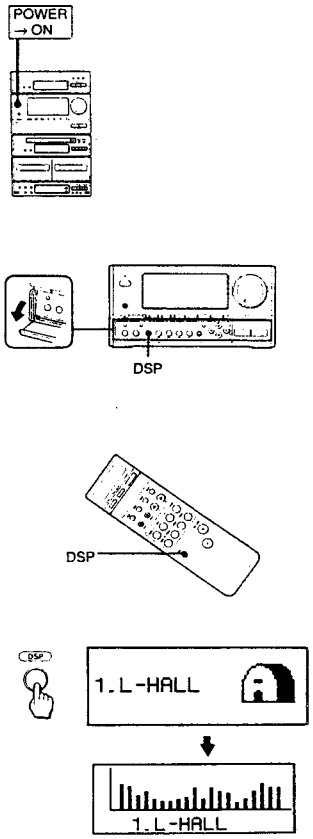

This unit incorporates a Digital Signal Processing (DSP) system which consists of a Digital Parametric Equalizer, a Digital Presence Surround Processor, and a Digital Dynamic Sound Controller. Using this DSP system, you can get the optimum sound for the kind of music you want to listen to.

Twelve recommended sound field programs (Digital Sound Menu) are preset at the factory for easy use. You can enjoy the digital sound effects by just choosing from the Digital Sound Menu according to the program source.

You can also create a variety of different sounds and effects by adjusting the Digital Sound Menu settings using three different sound manipulation functions.

Making full use of the DSP system allows you to maximize your music listening enjoyment.
You can also store up to six settings you have created in the memory (Personal File).

How to get the Digital Sound Effect

To adjust each of the Digital Sound Effect, you must activate the DSP system first.

Press DSP.

When the DSP is working, one of the 12 Digital Sound Menus (page 74) or one of the six Personal Files (page 86) displays in the display window.

To cancel the DSP effect
Press DSP again.
The Digital Sound Menu or the Personal File disappears and the display shows "EFFECT OFF."

Using the Digital Sound Effects

Enjoying the Digital Sound Menu

When the system is shipped from the factory, 12 specially recommended combinations of settings for the Parametric Equalizer, Presence Surround and Dynamic Sound (Digital Sound Menu) are stored. Since these programs are appropriate for most types of music and listening situations, you can enjoy the digital sound effects by just choosing from the Digital Sound Menu according to the program source.

Before you start
If "EFFECT OFF" is displayed, press DSP to activate the DSP system.

1 **Press PRESET.**
The display shows a "menu display" (choices) of the Digital Sound Menu.

2 **Select the Digital Sound Menu using CURSOR CONTROL and by referring to the table on page 76.**
The selected Digital Sound Menu displays and the sound effect starts two seconds after releasing the CURSOR CONTROL buttons. Then, the display goes back to its normal state (see page 78).

To display the next or previous menu a
Press ▲ or ▼.

To move the cursor b
Press ◄ or ►.

To select the Digital Sound Menu directly
(Possible with the remote commander only)

1 Press DSP on the remote commander so that "DSP" appears on the display on the remote commander.
2 Press the numeric button A for the desired Digital Sound Menu

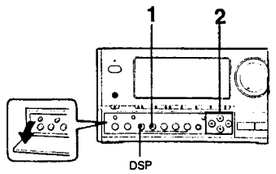

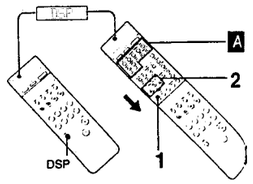

1
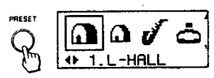

2
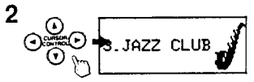

a
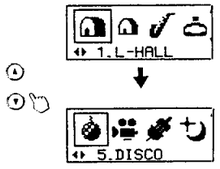

b
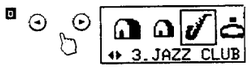

Using the Digital Sound Effects

	Display	Applications
1	L-HALL	1
2	S-HALL	2
3	JAZZ CLUB	3
4	STADIUM	4
5	DISCO	5
6	MOVIE	6
7	SYMPHONY	7
8	NIGHT	8
9	BGM	9
10	SIMULATED	10
11	WM	11
12	CAR	12

1 Gives the atmosphere of a large hall which seats more than 2000 people.
2 For chamber music or an instrumental solo.
3 For jazz.
4 For a live concert in an open-air stadium.
5 Gives a sound similar to a disco which has hard floors and walls.
6 For DOLBY surround encoded video programs.
7 For orchestral music.
8 For enjoyment of sound at low listening levels.
9 For background music.
10 Gives width to a monaural program source.
11 For recording a tape to be listened to with stereo headphones.
12 For recording a tape to be listened to in a car.

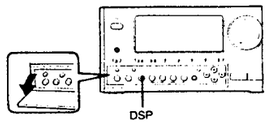

Using the Digital Sound Effects

Changing the Display

(Not possible with the remote commander)

Each time you press DISPLAY, the display changes in the following order:

a Spectrum analyzer 1
b Spectrum analyzer 2
c Digital Sound Menu Display

Note:
When the DSP system is not on, the display shows "EFFECT OFF" instead of the selected Digital Sound Menu.

To make the display move with the music A
(Not possible with the remote commander)

You can make the picture in the display move to the rhythm of the music as an animation. The picture moves quickly when the music is fast, slowly when the music is slow, and stops when the music stops. You can enjoy this effect along with any sound effect available with this unit.

Press BALANCE and DISPLAY at the same time.

The picture that represents the selected Digital Sound Menu starts moving. Each Digital Sound Menu has a different picture for this effect.
The illustration A shows an example of this effect when the Digital Sound Menu "CAR" is selected. There is also a picture for when the DSP system is not active.

To exit this mode
Press DISPLAY.

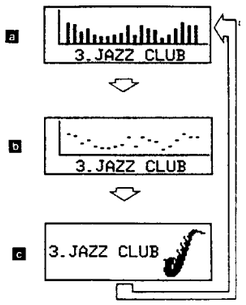

A

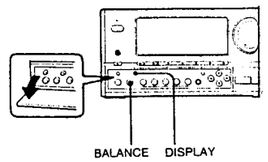

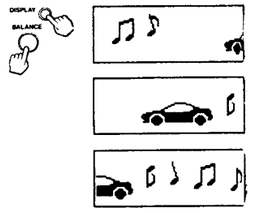

Using the Digital Sound Effects

Using the Digital Parametric Equalizer

This function allows you to adjust the sound by raising and lowering the levels of specific frequency ranges.

Before you start
If "EFFECT OFF" is displayed, press DSP to activate the DSP system.

1 **Select the Digital Sound Menu (See page 74.)**

2 **Select the frequency range you wish to adjust by pressing PARAMETRIC EQUALIZER. (P.EQ on the remote commander)**
Each time you press it, the frequency range in the Equalizer display changes as follows:
PEQ 1 → PEQ 2 → PEQ 3

Display	Frequencyr ange
PEQ 1	Low range
PEQ 2	Middle range
PEQ 3	High range

When the unit is shipped from the factory, each of the three frequency positions is defined for a specific frequency range as shown in the above table.
The adjustable frequency range can be freely moved from left to right (low → high) along the frequency scale as explained in the next step. This allows each of the frequencies (PEQ 1 – 3) to be used for any frequency range. For example, PEQ 1 does not have to be used to adjust a low-frequency range, but can be used instead to adjust a mid- or high-frequency range by moving it to the right along the scale.

3 **Adjust the sound using CURSOR CONTROL.**
a ◄ or ►: Shifts the frequency range to be adjusted to the left or to the right.
b ▲ or ▼: Raises or lowers the level of the frequency range centering around the flashing dot

4 **If you wish to adjust the level of another frequency range, repeat steps 2 and 3.**
The "Equalizer display" disappears about 10 seconds after you adjust the sound.

Confirming the effect of the adjustment
Display the "Equalizer display" by pressing PARAMETRIC EQUALIZER and then press ON/OFF.
"±0 dB" displays and the equalizer curve becomes flat.
Each time you press ON/OFF, the sound switches back and forth between the adjusted settings and a flat curve, allowing you to hear and compare the difference.

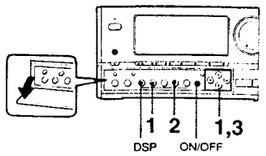

1
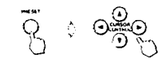

2
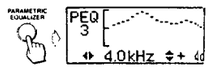

3

a
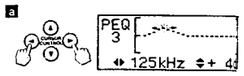

b
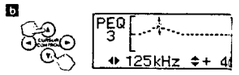

SONY-04779 / Druck 1

Using the Digital Sound Effects

Using the Digital Presence Surround Effects

The surround function allows you to adjust the length of the reverberation time and the level of the reverberated sound, putting you in control of a wide range of effects and sounds.
The surround effect adjustments should usually be set to match the size of the envisaged concert hall.
When you want to create the atmosphere of a small hall such as a live house or club, shorten the reverberation time.
When you want to create the atmosphere of a large hall such as a concert hall, lengthen the reverberation time.
If you want to add the feeling of being in a "live" hall where there is a lot of echo, increase the level (strength) of the reverberated sound. If you want to add the feeling of being in a "dead" hall where there is little echo, decrease the level of the reverberated sound.

Before you start
If "EFFECT OFF" is displayed, press DSP to activate the DSP system.

1 **Select the Digital Sound Menu. (See page 74.)**

2 **Press PRESENCE SURROUND. (SURROUND on the remote commander)**
The "Surround display" appears.

3 **Adjust the sound using CURSOR CONTROL.**
A To change the reverberation time (a)
To shorten the reverberation time, press ◄.
To lengthen the reverberation time, press ►.
B To change the level of the reverberated sound (b)
To increase the level, press ▲.
To decrease the level, press ▼.

The "Surround display" disappears about 10 seconds after you adjust the sound.

Confirming the effect of the adjustment
Display the "Surround display" by pressing PRESENCE SURROUND and then press ON/OFF. "---- dB" displays. Each time you press ON/OFF, the sound switches back and forth between the adjusted settings and no surround effect, allowing you to hear and compare the difference.

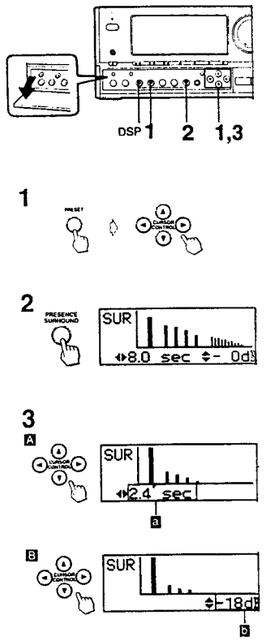

Using the Digital Sound Effects

Adjusting the Digital Dynamic Sound Controller

This unit allows you to select either of the two Dynamic Controls, Compressor (CP) or Noise Gate (NG).
The compressor compresses the dynamic range of the output signal to increase the average output level without distortion. This function is useful for obtaining dynamic sound at a small output level or when recording,a program source with a wide dynamic range, such as a compact disc or a cassette tape.
On the other hand, the Noise Gate limits the dynamic range of the input signal to eliminate undesired noise between tunes, etc.
You can set the Compressor or Noise Gate effect in seven increments: "CP.1" to "CP.4", "NG.1" to "NG.3".
The higher the number selected, the stronger the effect.
When the dynamic sound controller is set to "NORM," there is no special effect.

Before you start
If "EFFECT OFF" is displayed, press DSP to activate the DSP system.

1 **Select the Digital Sound Menu. (See page 74.)**

2 **Press DYNAMIC SOUND. (DDS on the remote commander)**
The "Dynamic Sound display" appears.

3 **Select the Compressor or Noise Gate using CURSOR CONTROL.**

The "Dynamic Sound display" disappears about 10 seconds after adjusting the sound.

Confirming the effect of the adjustment
Display the "Dynamic Sound display" by pressing DYNAMIC SOUND and then press ON/OFF. "NORM" displays. Each time you press ON/OFF, the sound switches back and forth between the adjusted settings and no Dynamic Sound effect, allowing you to hear and compare the difference.

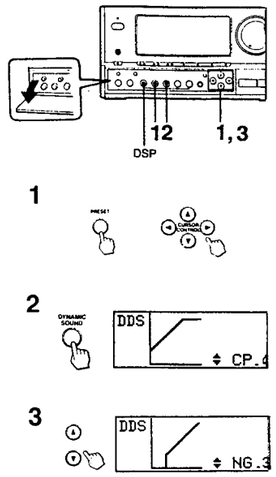

Using the Digital Sound Effects

Storing Your Individual Sound Effect Settings – Personal File

By storing your individual sound effect settings in the Personal File, you can easily call up the settings at any desired time. You can store up to six combinations of settings.

Before you start
If "EFFECT OFF" is displayed, press DSP to activate the DSP system.

1 **Obtain the desired sound effect. (See page 80, 82, 84)**

2 **Press MEMORY.**
"MEMORY menu display" (MEMORY and the letters A to F) appear on the display.

3 **Select a letter (A through F) using CURSOR CONTROL.**

4 **Press MEMORY while the "MEMORY menu display" is displayed.**

The Equalizer Curve, Presence Surround and Dynamic Sound settings are saved under the selected letter. The selected Personal File name appears on the display. The settings previously stored at this memory location are erased and replaced by the new settings.

If you do not press MEMORY in step 4
The "MEMORY menu display" disappears after about 10 seconds. The adjusted sound effect settings is not saved.

If you do not save the sound effect that you obtained
When you press PRESET, the sound effect settings are canceled and the sound goes back to the factory-set effect Store your individual settings before operating other buttons.

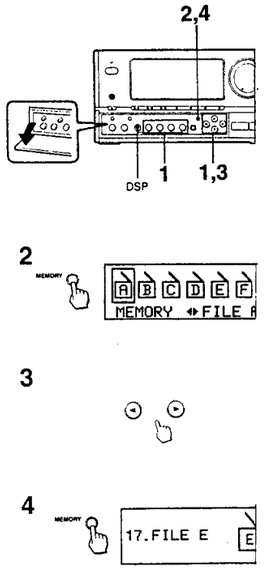

Using the Digital Sound Effects

Calling up settings from Personal File

Before you start
If "EFFECT OFF" is displayed, press DSP to activate the DSP system.

1 **Press PRESET.**
The "menu display" of the Digital Sound Menu appears.

2 **Select the Personal File with CURSOR CONTROL.**

To display the Personal File menu
Press ▲ or ▼.

To select the desired Personal File
Press ◄ or ►.

The selected Personal File displays and the sound effect starts two seconds after releasing the CURSOR CONTROL buttons. Then, the display goes back to its normal state (see page 78.)

To select the Personal File directly (Possible with the remote commander only)

1 Press DSP on the remote commander so that "DSP" appears on the display on the remote commander.
2 Press >12 and the numeric buttons.

Personal File A: >12 and 1
Personal File B: >12 and 2
Personal File C: >12 and 3
Personal File D: >12 and 4
Personal File E: >12 and 5
Personal File F: >12 and 6

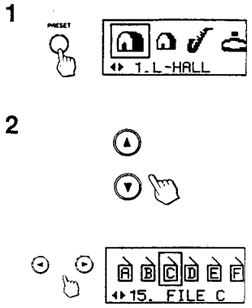

Storing the Volume Setting for Timer-Activated Operation Wake Up Volume

The volume setting is called up automatically when the power is turned on for timer-activated operation (page 128). This is convenient for when you want to wake up to music, etc. You can also use the Sleep Timer function (page 136) together with this function to listen to music in a low volume when you go to sleep, and in a high volume when you wake up.

1 **Adjust the VOLUME.**

2 **Keep WAKE UP depressed until "WAKE UP MEMORY" appears on the display.**
The WAKE UP indicator lights up.

When you do not want to use the Wake Up Volume
Press WAKE UP so that the WAKE UP indicator goes off.

To activate the Wake Up Volume again
Press WAKE UP again.

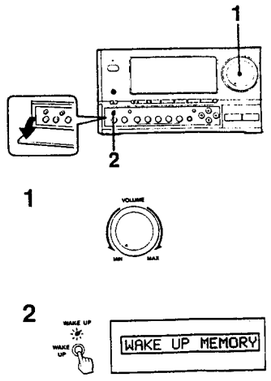

Sleep Timer Operation

By setting the sleep timer, the system power can be turned off after the preset duration (up to 90 minutes).
This operation is possible only with the remote commander.

1 **Play the desired program source.**

2 **Press SLEEP to select the desired duration in minute.**
As you press SLEEP, the indication changes as follows:
90 → 80 → .... → 10 → ...

To turn off the system before the system is turned off by the sleep timer
Press SYSTEM POWER.

To check the remaining time before the sleep timer turns off the system
Press SLEEP once, and the remaining time appears. The display returns to the previous indication automatically after several seconds.

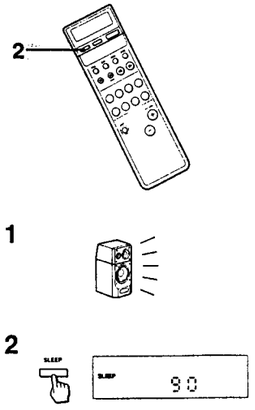

Editing the Sound with a Video Equipment

When you connect a video equipment with this system, you can edit the sound of the audio equipment with the picture of the video equipment.

1 **Press FUNCTION VIDEO (VIDEO 1 or VIDEO 2 on the remote commander) to select the video source.**
The green and red lamps of the program function indicators light up.

2 **Press FUNCTION AUDIO (TUNER, CD, TAPE or TAPE A/B, DAT or PHONO on the remote commander) to select the audio source.**
The green lamp of the video source (a) stays on and the red lamp goes off. The red lamp of the audio source (b) lights up.

The sound of selected the audio source is mixed with the picture of the selected video source.

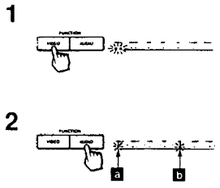

SONY-04779 / Druck 2

SECTION 2
DIAGRAMS

2-1. IC PIN DESCRIPTION

• IC101 Dual VCA IC for HiFi Electronic Volume (M5283P)

Pin No.	Name	Mark	Description
1	CH1 side (+) power supply	(+) Vcc	CH1 side power supply terminal
2	CH1 control terminal	Vc1	Controls the signal for ch1 side. Controls the signal by giving 0~5v of the voltage to this terminal. Requires approx. 30nA (standard) as bias current.
3	CH1 output terminal	OUT1	CH1 side output terminal
4 5	(-) power supply terminal	(−) Vcc	Terminals 4, 5, 12, 13 are connected internally.
6	CH1 grounding terminal	GND1	CH1 side grounding terminal (GND)
7	Not connected	NC	Condition is OPEN.
8	CH1 input terminal	IN1	CH1 side input terminal approx. 47K of resistance is inserted for DC bias between GND and this terminal (terminal 8).
9	CH2 input terminal	IN2	CH2 side input terminal approx. 47K of resistance is inserted for DC bias between GND and this terminal (terminal 9).
10	Not connected	NC	Condition is OPEN.
11	Grounding terminal	GND2	CH2 side grounding terminal (GND)
12 13	(-) power supply terminal	(−) Vcc	Terminals 4, 5, 12, 13 are connected internally.
14	CH2 input terminal	OUT2	CH2 side output terminal
15	CH2 control terminal	Vc2	Controls the signal for ch2 side. Controls the signal by giving 0~5v of the voltage to this terminal. Requires approx. 30nA (standard) as bias current.
16	CH2 side (+) power supply	(+) Vcc	CH2 side power supply terminal

• IC111 Digital Signal Operation for Audio (CXD2701Q)

Digital signal operation for 2 channel audio "LSI" which excutes reverberation function and equalizer function in 1 chip.

Pin No.	Pin Name	I/O	Description
1	IMODE	I	Input data format setting terminal Data position changes with "H", "L".
2	IDIR	I	Input data format setting terminal MSB first with "H", LSB first with "L".
3	DATAI	I	Serial data input terminal with 1 sampling, 2 channels. Data format is the complement of 2.
4	BCKI	I	Serial bit clock input terminal for serial input data.
5	LRCKI	I	Serial I/O sampling frequency clock input terminal. L-ch data is transferred with level "H", R-ch data is transferred with level "L".
6	Vss 1	—	GND terminal
7	DATAO	O	Serial data output terminal. Data format is the complement of 2.
8	BCKO	O	Bit clock output terminal. 64 slots.
9	LRCKO	O	Serial data sampling frequency clock output terminal
10	BS1	I	Output data, bit numbers setting terminal BS2 = H, BS1 = H 24bit BS2 = H, BS1 = L 20bit BS2 = L, BS1 = H 18bit BS2 = L, BS1 = L 16bit
11	BS2		
12	ODIR	I	Output data format setting terminal MSB first with "H", LSB first with "L".

Pin No.	Name	I/O	Description
13	V_{ss} 3	—	GND terminal
14	SCK	O	System clock output terminal. fsck = fxt = 512fs
15	XOUT	O	Quartz oscillation circuit output terminal
16	XIN	I	Quartz oscillation circuit input terminal
17	V_{DD} 1	—	+5V Power supply terminal
18	I/O4	I/O	Data input and output I/O4 for outside DRAM
19	I/O3	I/O	Data input and output I/O3 for outside DRAM
20	CAS	O	Outside DRAM column address strobe output terminal.
21	I/O2	I/O	Data input and output I/O2 for outside DRAM
22	I/O1	I/O	Data input and output I/O1 for outside DRAM
23	WE	O	Outside DRAM write enable output terminal. Valid with "L" level
24	A0	O	Outside DRAM address output A0
25	RAS	O	Outside DRAM row address strobe output terminal
26	A1	O	Outside DRAM address output A1
27	A2	O	Outside DRAM address output A2
28	Vss 2	—	GND terminal
29	A3	O	Outside DRAM address A3
30	A4	O	Outside DRAM address A4
31	A5	O	Outside DRAM address A5
32	A6	O	Outside DRAM address A6
33	A7	O	Outside DRAM address A7
34	A8	O	Outside DRAM address A8
35	TEST1	I	Test terminal. Normally fixed to GND.
36	TEST2	I	Test terminal. Normally fixed to GND.
37	TEST3	I	Test terminal. Normally fixed to GND.
38	TEST0	O	Tesr terminal
39	V_{DD} 2	—	+5V power supply terminal
40	PRGD	I	Serial data input terminal which receives the transmission of order, coefficient and control from the micro computer.
41	PRGCK	I	PRGD serial clock input terminal which receives data at positive edge.
42	PRGL	I	Latch input terminal to latch the serial data in IC from the microcomputer. Active "L".
43	INIT	I	Initialize terminal. Valid with "L". Re-synchronize at positive edge.
44	OVF	O	Output the over flow flag of DSP, L-ch MIX, R-ch MIX, L-ch EQ and R-ch EQ.

- IC109 Device Controller (M37450)
- The following items are conducted with the IC109 device controller.
- AU BUS is received and converted for transmission to feature controller (IC508).
- Devices such as DSP (IC111), DIO (IC123) and DPAC (IC112) are controlled in accordance with commands from feature controller (IC508).
- Tuner, deck and CD player are controlled by command transmissions to AU BUS.
- Power ON/OFF of CD players and cassette decks

Pin No.	Name	I/O	Description
1		—	Not used.
2	EV2	I	AU-BUS input
3	EV1	I	AU-BUS input
4	P57	O	AU-BUS output
5	P56	I	AU-BUS input
6	DBDATA	O	LC7822 (DBFB) control (serial data)
7	DBCE	O	LC7822 (DBFB) control (chip enable)
8	DBCLK	O	LC7822 (DBFB) control (clock)
9	DBRES	O	LC7822 (DBFB) control (reset)
10		—	Not used (OPEN).
11	MUTE	O	After VCA Mute. Low : Mute
12, 16	AMUTE	O	Analog Mute. Low : Mute
13	2DB	O	EQ Gain Switch + 2dB * 1
14	4DB	O	EQ Gain Switch + 4dB * 1
15	8DB	O	EQ Gain Switch + 8dB * 1
17		—	Not used.
18	DINERR	I	CDX2905Q (DIO) status input. High : Unlock
19	INT1	I	Not used (GND).
20-24		—	Not used (OPEN).
25	CNV_{ss}	—	Power supply terminal (GND)
26	RESET	I	System reset input
27		—	Not used (OPEN).
28	XIN	I	Clock input (8MHz)
29	XOUT	O	Clock output
30, 31		—	Not used (OPEN).
32	V_{ss}	—	Power supply terminal (GND)
33		—	Not used (OPEN).
34	CDOFF	O	Power control for CDP-H6600, TC-H5600/H6600. Low : POWER ON
35		—	Not used (OPEN).
36	FRES	I	Function request from analog function controller in TC-H5600/H6600.
37	FS48	I	Receives the sampling frequency information from CXD2905Q (DIO). H : fs = 48KHz
38	2701LT	O	Latch to CXD2701Q (DPS + EQ).
39	DEVCLK	O	Data and shift clock to CXD2905Q, CXD1160AX, CXD2701Q.
40	DEVDATA	O	Data and shift clock to CXD2905Q, CXD1160AX, CXD2701Q.
41		—	Not used (OPEN).
42	FS32	I	Receives the sampling frequency information from CXD2905Q (DIO). H : FS = 32KHz
43	DIORDY	I	Handshake with CXD2905Q (DIO). Ready with High.
44		—	Not used (OPEN).
45	DIOIFST	O	CPU I/F for CXD2905Q
46	VCO/XTA	O	VCO/X'tal select. Low for Analog input.
47	AD/DIN	O	AD/DIN select. High for Analot input.
48	EMPH	I	Receives the emphasis information from CXD2905Q (DIO). H : Emphasis On

Pin No.	Name	I/O	Description
49	CD/DAT	O	CD/DAT DIN select. L : CD, H : DAT
50	DIOIFINI	O	Initializes CPU I/F in CXD2905Q (DIO).
51	INITDA	—	Not used (OPEN).
52	INITDIO	O	CXD2905Q (DIO) reset
53	DOENA	O	Enable and Disable for digital Out
54	NENA	O	Enable output for noise generator of CXD8245M.
55	INIT EQ/D	O	Reset for CXD2701Q and CXD2560M
56	DPAC LT	O	Latch to CXD1160AQ (DPAC)
57	INIT AD	O	Initialization and calibration for CS5339 (A/D). Normal with Low.
58-62	P47-P43	—	Not used (OPEN).
63	NOSIGR	I	Low with no-digital signal
64	NOSIGL	I	Low with no-digital signal
65	AN	—	Not used (OPEN).
66	D-A2	O	D/A output to VCA
67	D-A1	O	D/A output to VCA
68	DAVref	—	Power supply terminal (+5V)
69	ADVref	—	Power supply terminal (+5V)
70	AV_{SS}	—	Power supply terminal (GND)
71	AS_{CC}	—	Power supply terminal (+5V)
72	V_{CC}	—	Power supply terminal (+5V)
73	V_{SS}	—	Power supply terminal (GND)
74, 75		—	Not used (OPEN).
76	TXD	O	Transmission output to MC68HC11 (feature controller). 4800 bps
77	RXD	I	Transmission input to MC68HC11 (feature controller). 4800 bps
78 – 80		—	Not used (OPEN).

※1 Equalizer gain switch

EQ gain [dB]	– 12~0	2	4	6	8	10	12
⑬ pin + 2dB	H	L	H	L	H	L	H
⑭ pin + 4dB	H	H	L	L	H	H	L
⑮ pin + 8dB	H	H	H	H	L	L	L

● IC506 Display Controller (TMP91C640F – 2302)

The FL tube display is controlled with the display command from feature controller (IC506).

Pin No.	Pin Name	I/O	Description
1~11	——	I	Not used. (GND)
12	STB B	I	DATA send LATCH input from IC508
13,14	——	I	Not used. (GND)
15	$\overline{NMI}$	I	AC power supply interrupt detect input. (Normally set to "H".) Once "L" is received, the operation is terminated until the Pin No. 16 RESET is cancelled.
16	$\overline{RESET}$	I	Reset input. Resets when "L".
17	CLK		Not used. (GND)
18~25	PO0~PO7	I/O	Display command input from IC508
26	Vss	—	Power supply terminal (GND)
27	X1	I	Clock input (15 MHz)
28	X2	O	Clock output (15 MHz)
29,30	——	—	Not used. (Open)
31	STB A	O	DATA receive LATCH output to IC508
32	REQUEST	O	Normally set to "L". The Pin No. ⑱~㉕ ports are output when "H".
33~36	——	—	Not used. (Open)

Pin No.	Pin Name	I/O	Description
37~44	——	I	Not used. (GND)
45	——	—	Not used. (Open)
46	DCLR	O	Normally set to "H". Grid is not displayed when "L". DCLR is used for AC outlet ON/OFF only.
47	SCLR	O	Normally set to "L". Segment is not displayed when "H". SCLR is used for AC outlet ON/OFF only.
48	LATCH	O	Data LATCH output to IC501~IC505
49	$\overline{EA}$	I	Not used. (Pull-up)
50,51	——	I	Not used. (GND)
52	SCLK	O	Segment display clock output to IC502, IC503 and IC505 (segment drivers)
53	SDATA	O	Serial data output to IC502, IC503 and IC505 (segment drivers)
54	——	—	Not used. (GND)
55	DCLK	O	Grid display clock output to IC501 and IC504 (grid drivers)
56	DATA	O	Serial data output (approx. 10 msec sync pulse) to IC501 and IC504 (grid drivers)
57	——	—	Not used. (GND)
58	Vcc	—	Power supply terminal (+5 V)
59	Vref	—	Power supply terminal (+5 V)
60	A GND		Power supply terminal (GND)
61~64	——	—	Not used. (GND)

• IC508 Feature Controller (MC68H011E9-FU)

General controls such as FL display (IC506), IC109 control, spectrum analyzer input, and ON/OFF of mute, relay and LED, are conducted with the AU BUS data and key input from device controller (IC109).

Pin No.	Pin Name	I/O	Description
1	PA0	I	Specification select input (H5600 : L) (H6600 : H)
2~4	NC	—	Not used. (GND)
5	——	O	Not used. (Open)
6~12	LED A~G	O	LED output. Lights up when "H". Conducts dynamic light up at Pin No. ⑲ (LED SW).
13~16	Spectrum analyzerA~D	I	Spectrum analyzer data input (Analog)
17	VOL DATA	I	Volume (RV601) position detect input (Analog)
18	PE 6	I	Specification select input
19	KEY A	I	} Key input (Analog)
20	KEY B	I	} Key input (Analog)
21	VRL	—	A/D converter (internal) power supply (GND)
22	VRH	—	A/D converter (internal) power supply (+5.6 V)
23, 24	Vss	—	Power supply terminal (GND)
25	MODE B	I	Mode select input (Pull-up fixed)
26	NC	—	Not used. (GND)
27	MODE A	I	Mode select input (GND fixed)
28	STR A	I	DATA receive LATCH input from IC506
29	E	O	Not used. (Open)
30	STR B	O	Data send LATCH input to IC506
31	EXTAL	I	Clock input (8 MHz)
32	NC	—	Not used. (Open)
33	XTAL	O	Clock output
34	PCO	I/O	Display command output to IC506
35	NC	—	Not used. (Open)
36~42	PC1~PC7	I/O	Display command output to IC506
43	$\overline{RESET}$	I	Reset input. Resets when "L".
44	NC	—	Not used. (GND)
45	$\overline{IRQ}$	I	Not used. (+5.6 V)

Pin No.	Pin Name	I/O	Description
46	$\overline{XIRQ}$	I	AC power supply interrupt detect input. (Normally set to "H".)
47	RX	I	Serial data input from IC109
48	NC	—	Not Used. (Open)
49	Vss	—	Power supply terminal (GND)
50	TX	O	Serial data output to IC109
51	POWER	O	Power relay (RY901) ON/OFF output. Active when "H".
52	SPEAKER	O	Speaker relay (RY801, 802) ON/OFF output. Active when "H".
53	MUTE	O	Muting output. Mutes when "L".
54	HP	I	Headphones switch input. "L" when headphones are connected.
55	V_{DD}	—	Power supply terminal (+5.6 V)
56	VOL UP	O	UP signal output to volume motor (RV601)
57	VOL DOWN	O	DOWN signal output to volume motor (RV601)
58	——	—	Not used (Open)
59	SPASW A	O	LED dynamic display/spectrum analyzer select output (3.5 msec square wave)
60, 61	NC	—	Not used. (GND)
62	SPASW B	O	Spectrum analyzer select output (2 msec square wave)
63	REQUEST	I	Normally set to "L". The Pin No. ㉞, and ㊱~㊷ ports are input when "H".
64	——	I	Not used. (GND)

• Test Mode

A test mode is provided to conduct FL tube (FL501) lighting test without disassembling the unit.

Press and release the POWER button while pressing the DISP button during the power ON condition. Release the DISP button to enter the Test Mode.
The following three types of patterns will be displayed each time the DISP button is pressed during this condition.

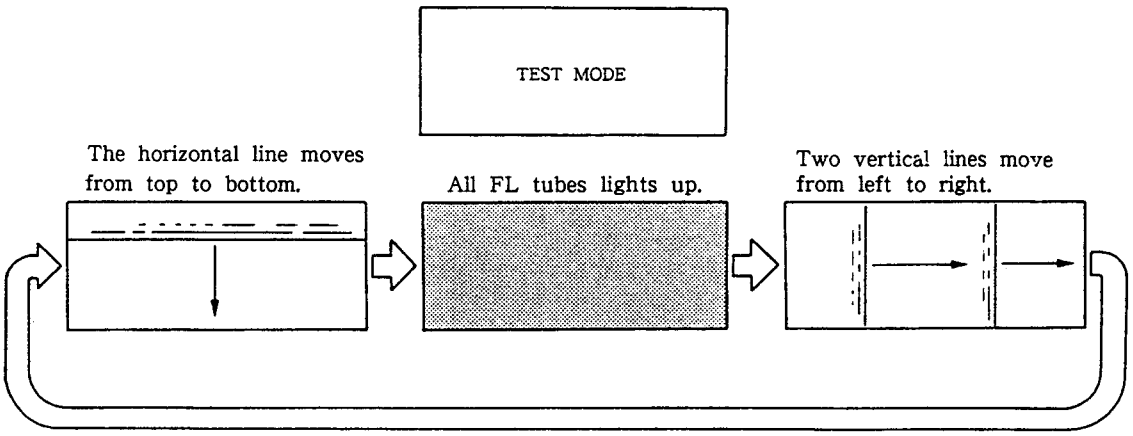

Other amplifier operations are identical to those during normal conditions (i.e. non-test mode condition). To exit the Test Mode, switch the power ON again.

• IC331 Pulse D/A Converter (CXD2561M)
The converter is a small, high-performance 1 bit pulse D/A converter that provides 4 asymmetrical PWM wave outputs in each ch of L/R.

Pin No.	Pin Name	I/O	Description
1	DV_{DD}	—	Digital power supply
2	TEST	I	Test terminal. Normally fixed at "L".
3	INIT	I	Again synchronized at the buildup edge of the signal.
4	LRCKI	I	LRCK input
5	DRI	I	Rch data input
6	DLI	I	Lch data input
7	BCKI	I	BCK input
8	DVss	—	Digital GND
9	512Fs	O	512Fs output
10	XVss	—	Clock GND
11	XIN	I	X'tal oscillator input terminal (512Fs)
12	XOUT	O	X'tal oscillator output terminal
13	XV_{DD}	—	Clock power supply
14	VSUB	—	Substrate. Connected to GND.
15	$AV_{DD}R$	—	Analog power supply
16	R1 (+)	O	Rch PLM output 1 (normal phase)
17	AVssR	—	Analog GND
18	R1 (−)	O	Rch PLM output 1 (reverse phase)
19	R2 (+)	O	Rch PLM output 2 (normal phase)
20	R2 (−)	O	Rch PLM output 2 (reverse phase)
21	AV_{DD}	—	Analog power supply
22	AVss	—	Analog GND
23	L2 (−)	O	Lch PLM output 2 (reverse phase)
24	L2 (+)	O	Lch PLM output 2 (normal phase)
25	L1 (−)	O	Lch PLM output 1 (reverse phase)
26	AVssL	—	Analog GND
27	L1 (+)	O	Lch PLM output 1 (normal phase)
28	$AV_{DD}L$	—	Analog power supply

• IC332 Digital Filter (CXD2560M)
The filter is a digital audio 8x oversampling digital filter with built-in L/R 2ch filter, noise shaping attenuator, softmuting deemphasis, etc.

Pin No.	Pin Name	I/O	Description
1	Vss	—	Power terminal (GND)
2	SYSM	I	System mute input. Effective upon "H"
3	ATT	I	ATT data input in CTL "L." EMP input upon CTL "H."
4	SHIFT	I	Shift clock input upon CTL "L." FS32 input upon CTL "H."
5	LATCH	I	Latch clock input upon CTL "L." FS48 input upon CTL "H."
6	CTL	I	Pull-down in the IC. Direct input mode upon "H." Serial transfer mode upon "L."
7	INIT	I	Synchronized again at the buildup edge of the signal.
8	BCKI	I	BCK input
9	DATAI	I	Data input
10	LACKI	I	LRCK input
11	TEST	I	Test terminal. Fixed at "L" during normal use.
12	Vss	—	Power terminal (GND)
13	128Fs	O	128Fs clock output
14	INVI	I	Inverter input
15	INVO	O	Inverter output
16	INVO2	O	Inverter output
17	MCLK	I	Master clock input (f=512Fs)
18	V_{DD}	—	Power terminal (+5 V)
19	BCKO	O	BCK output
20	DL	O	Lch data output.
21	DR	O	Rch data output
22	LRCKO	O	LRCK output
23	FLGL	O	Lch ϕ mute flag output
24	FLGR	O	Rch ϕ mute flag output

2-2. CIRCUIT BOARDS LOCATION

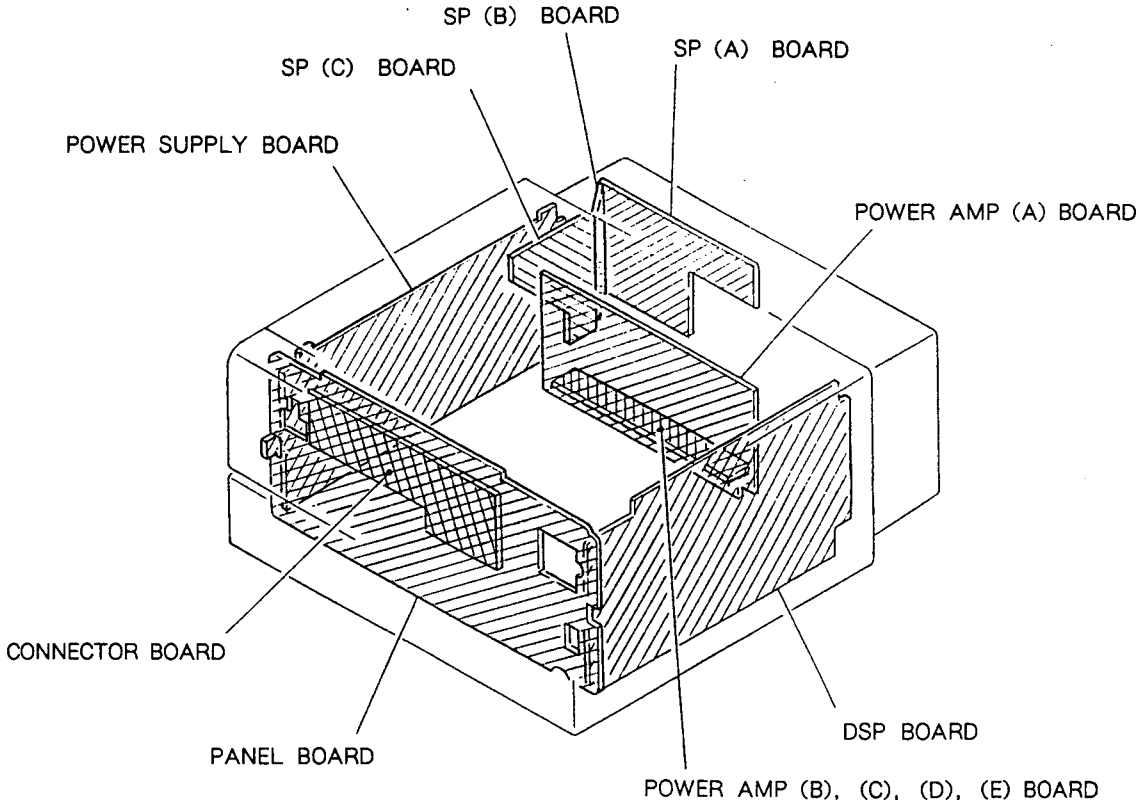

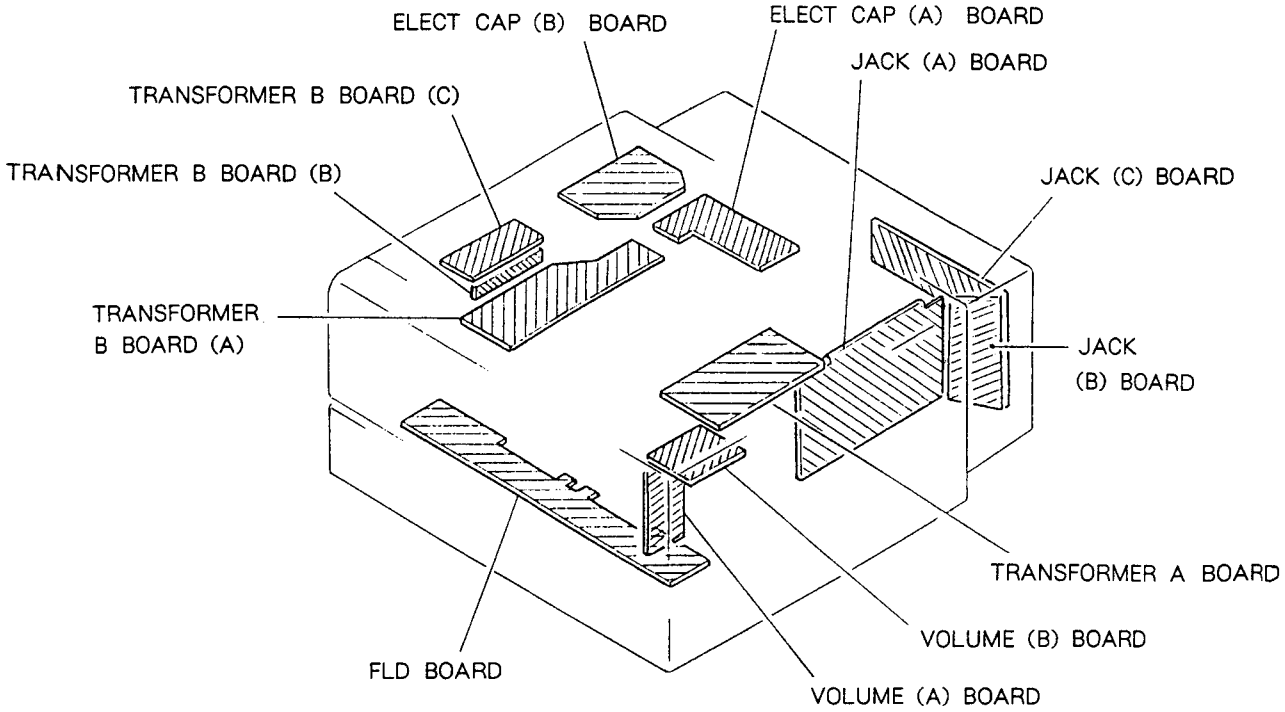

2-3. SEMICONDUCTOR LEAD LAYOUTS

LM393P

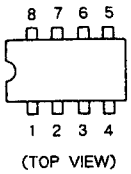

LM3875-2

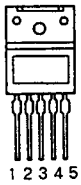

1 +IN
2 −IN
3 −VEE
4 OUT
5 VCC

DTC114ES
2SA1134
2SC2603-EF

RBV-602-01

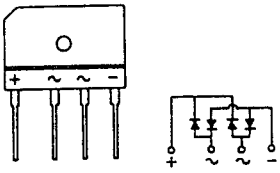

LC7822

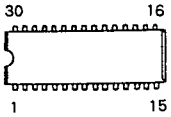

MSC7162

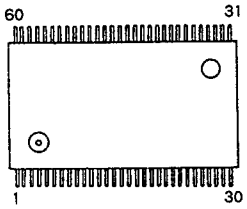

2SB1094-L

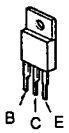

HZS30-2L
HZ12B2L
1SS120
1S1585

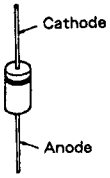

M51953BL

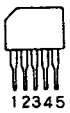

μPC1237HA
M5218AL
M5230L-A

SN75521
SN75531

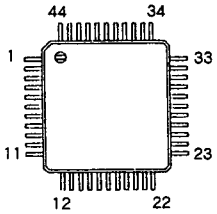

2SC3398
2SC3624A-15

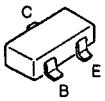

1SS226

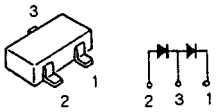

CXD1160AQ

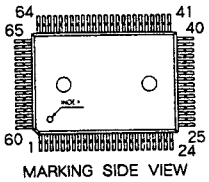

2SC1841-PAFAEA

2SA1175-HFE

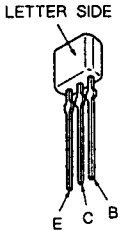

SEL2410E-D

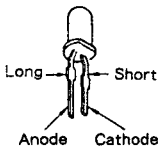

GP1F34R
GP1F34T

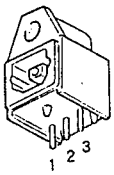

	34R	34T
1	VCC	IN
2	GND	VCC
3	OUT	GND

2SB1013-4
2SD1387-3
2SD1616A-K

HZS6B1L
HZS7B2L
HZS11B3L
1SS120
11ES2

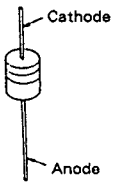

2-4. IC BLOCK DIAGRAMS

IC331 CXD2561

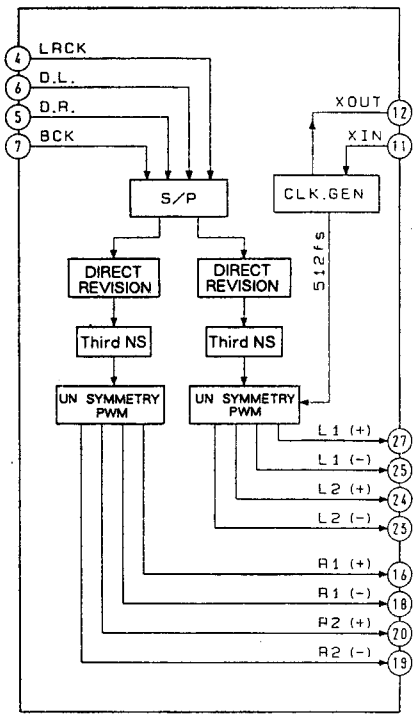

IC332 CXD2560M

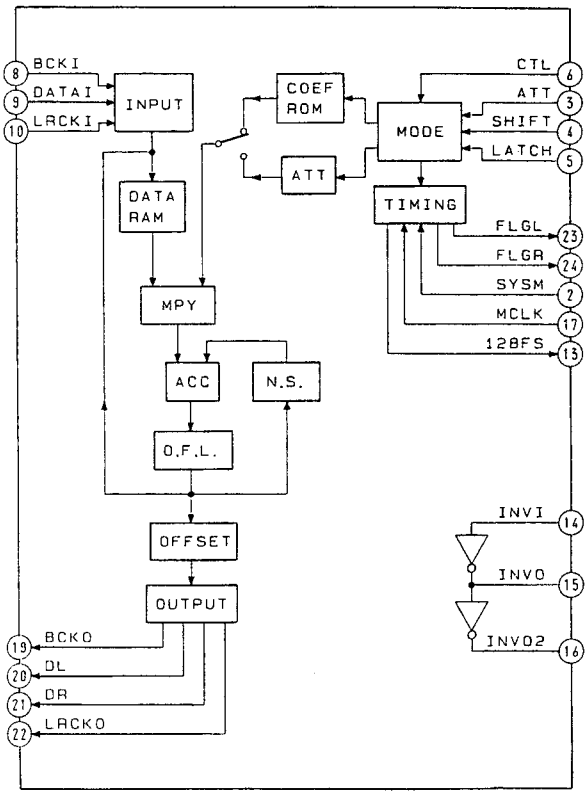

IC3, IC121 TL082M
IC113-120 M5218AFP

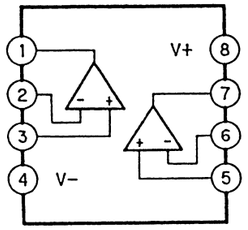

IC392 TC5081AP

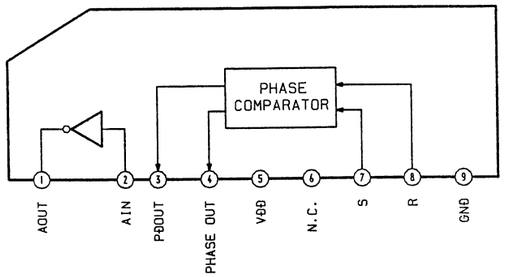

IC101 M5283P

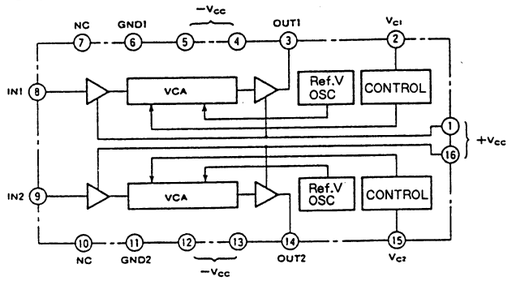

IC108 CXD2557M

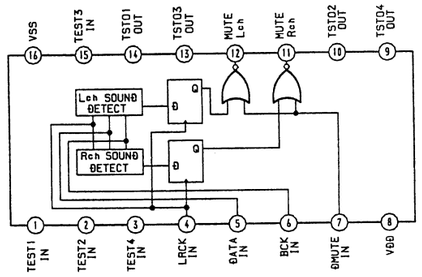

IC112 CXD1160AQ

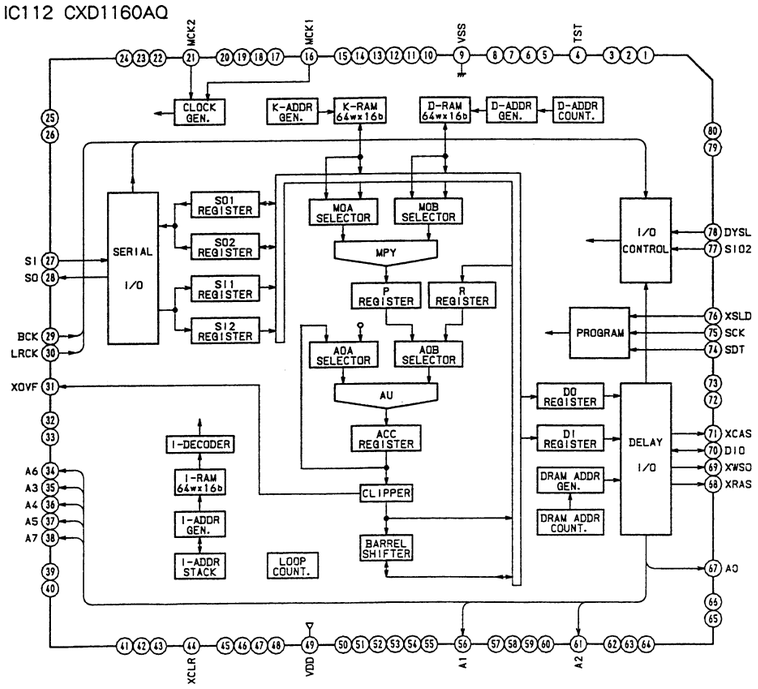

IC501, 504 MSC7162

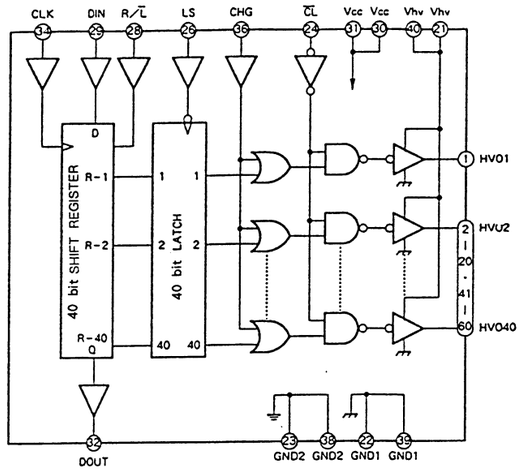

IC701 μ PC1237HA

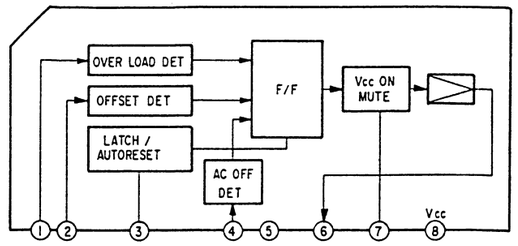

IC901 M5230L

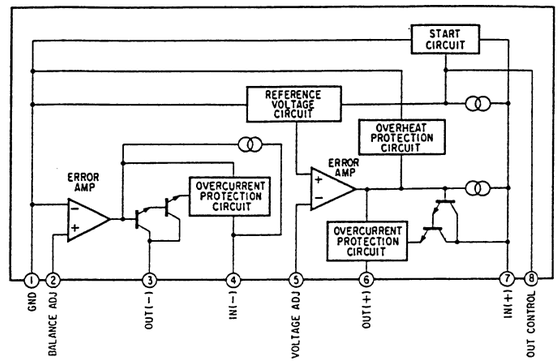

IC507 M51953BL

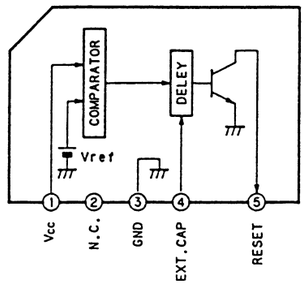

IC106 CXD8245M

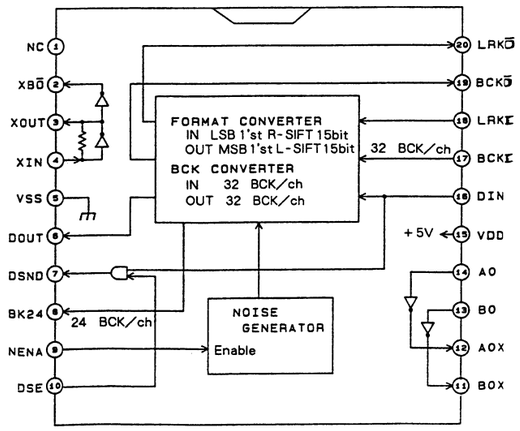

IC651 M5218AL

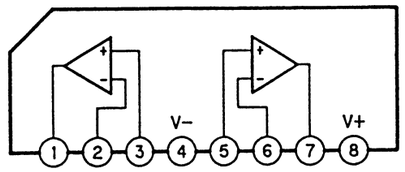

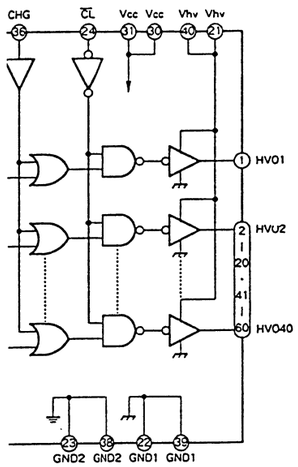

IC701 μ PC1237HA

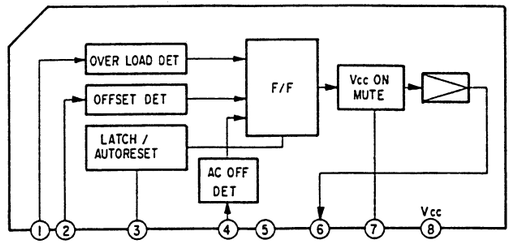

IC901 M5230L

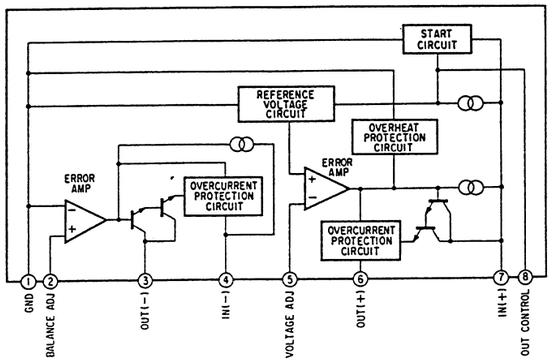

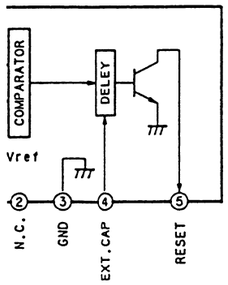

IC106 CXD8245M

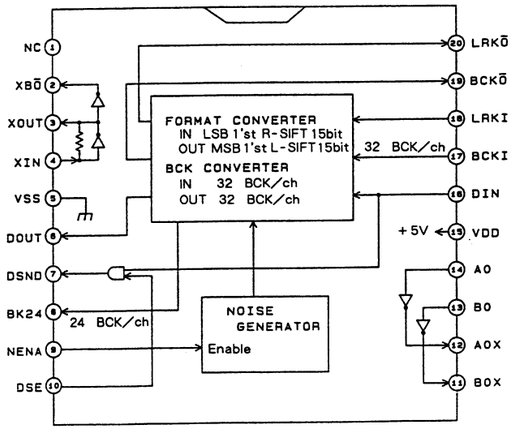

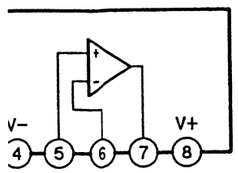

2-5. BLOCK DIAGRAM

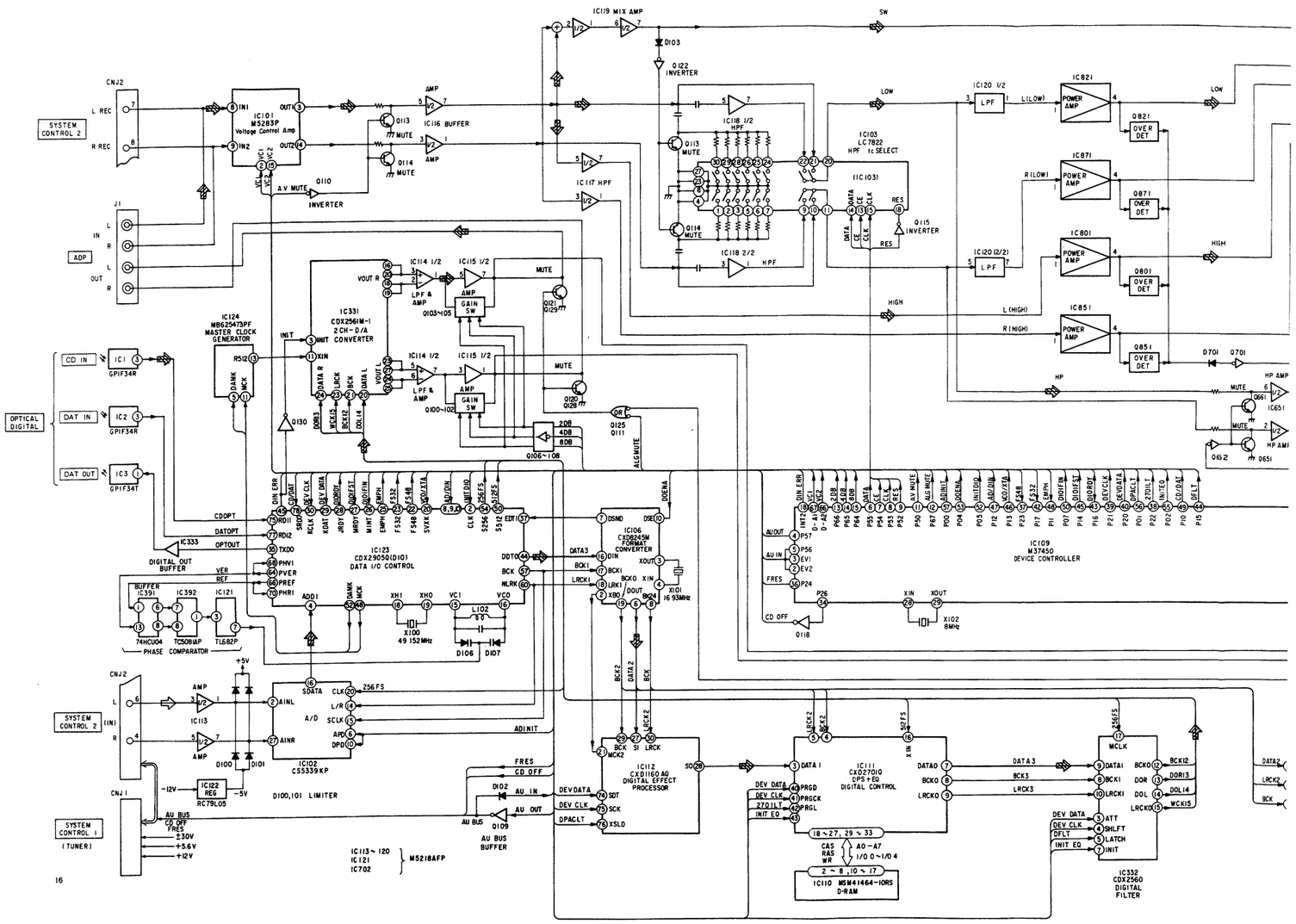

SONY-04779 / Druck 4

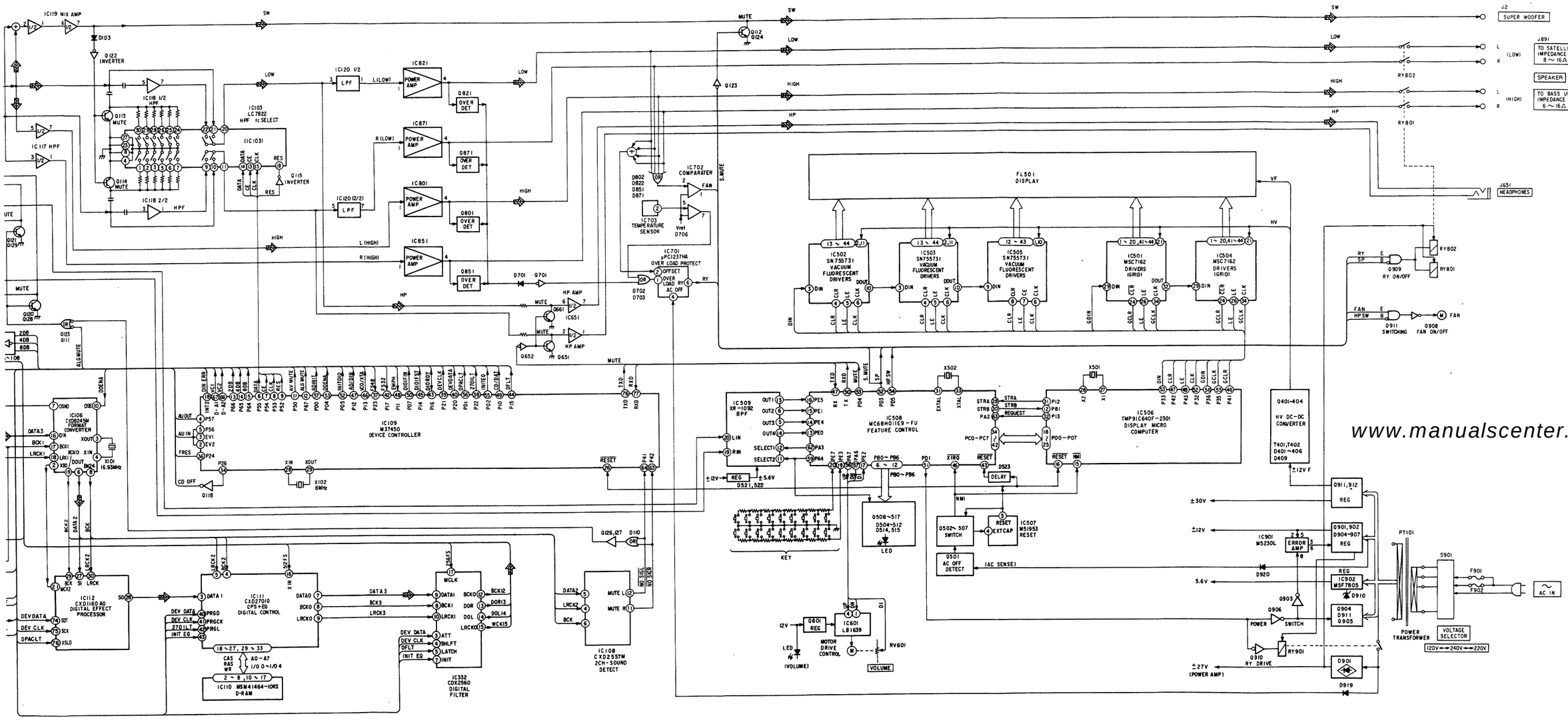

SONY-04779 / Druck 5

2-6. PRINTED WIRING BOARDS — JACK, POWER SUPPLY SECTION —

• See page 16 to 17 for Circuit Boards Location and Semiconductor Lead Layouts.

• Semiconductor Location

Ref. No.	Location	Ref. No.	Location
D401	J-3	Q403	J-4
D402	J-3	Q404	J-4
D403	J-3	Q651	D-31
D404	J-4	Q652	D-31
D405	J-4	Q661	D-31
D406	J-6	Q701	H-22
D409	J-7	Q801	I-20
D701	H-22	Q821	J-19
D702	H-22	Q851	I-23
D703	H-23	Q871	J-24
D704	I-21	Q901	E-30
D705	I-22	Q902	E-29
D706	I-22	Q903	D-30
D801	J-21	Q904	B-30
D802	I-21	Q905	B-31
D821	J-20	Q906	C-31
D822	I-20	Q907	G-7
D851	J-22	Q908	B-27
D852	I-21	Q909	C-25
D871	J-23	Q910	C-28
D872	I-20	Q911	H-20
D891	D-24	Q911	B-26
D892	C-24	Q912	G-10
D901	C-26		
D902	C-28		
D903			
D904	B-29		
D905			
D906	C-28		
D907	C-28		
D908	B-29		
D909	B-29		
D910	B-31		
D911	B-31		
D912	G-8		
D913	G-8		
D914	G-8		
D915	H-8		
D916	H-8		
D917	H-7		
D918	H-7		
D919	B-25		
D920	B-31		
D921	H-11		
D922	H-11		
D923	G-11		
D924	G-11		
IC1	C-2		
IC2	E-2		
IC3	D-2		
IC651	C-31		
IC701	H-22		
IC702	J-22		
IC703	I-22		
IC801	K-21		
IC821	K-19		
IC851	K-22		
IC871	K-24		
IC901	D-29		
IC902	B-31		
Q401	J-9		
Q402	J-10		

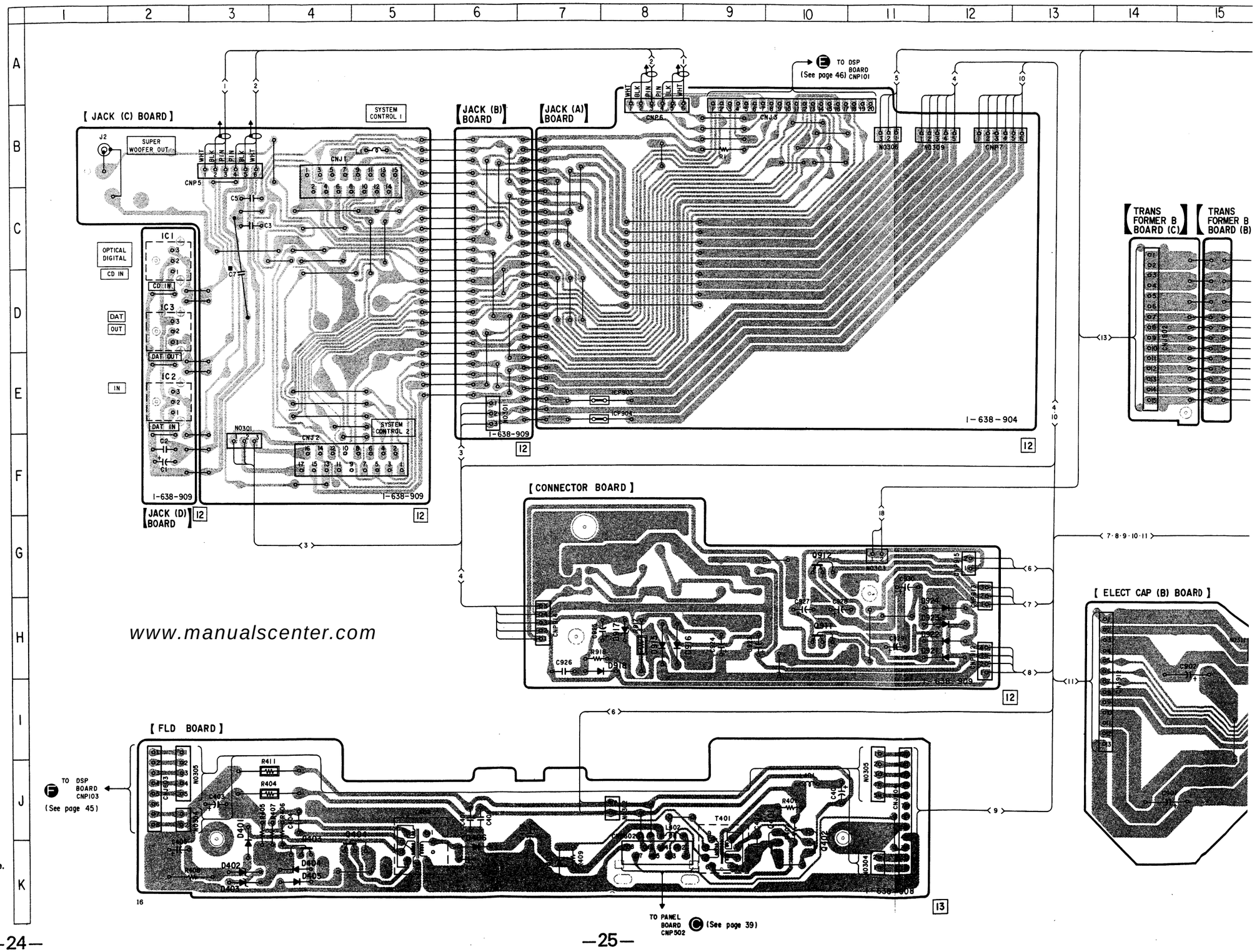

Note on Mounting Diagram :

● o—— : Parts extracted from the component side.

SONY-04779 / Druck 6

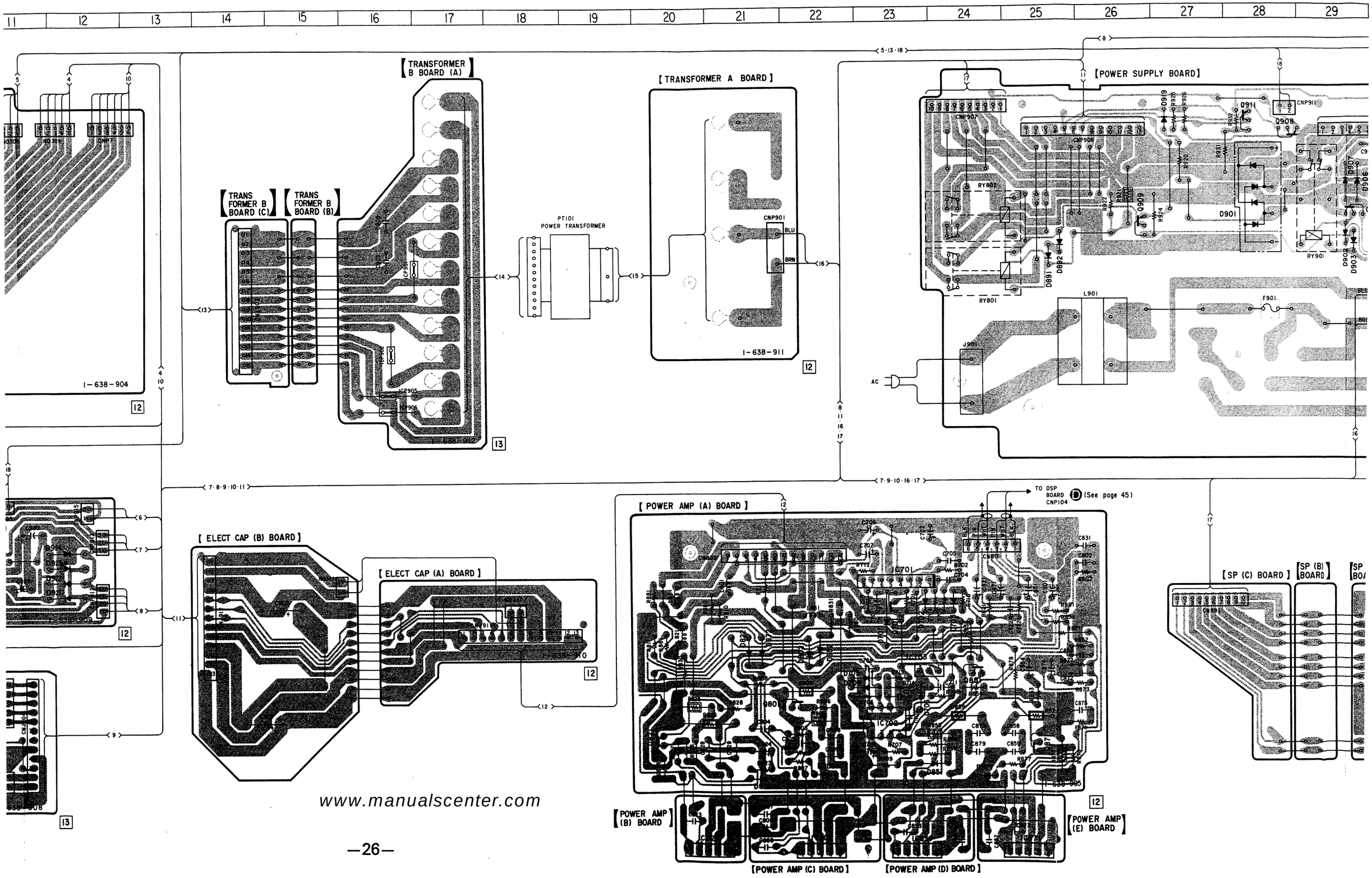

SONY-04779 / Druck 7

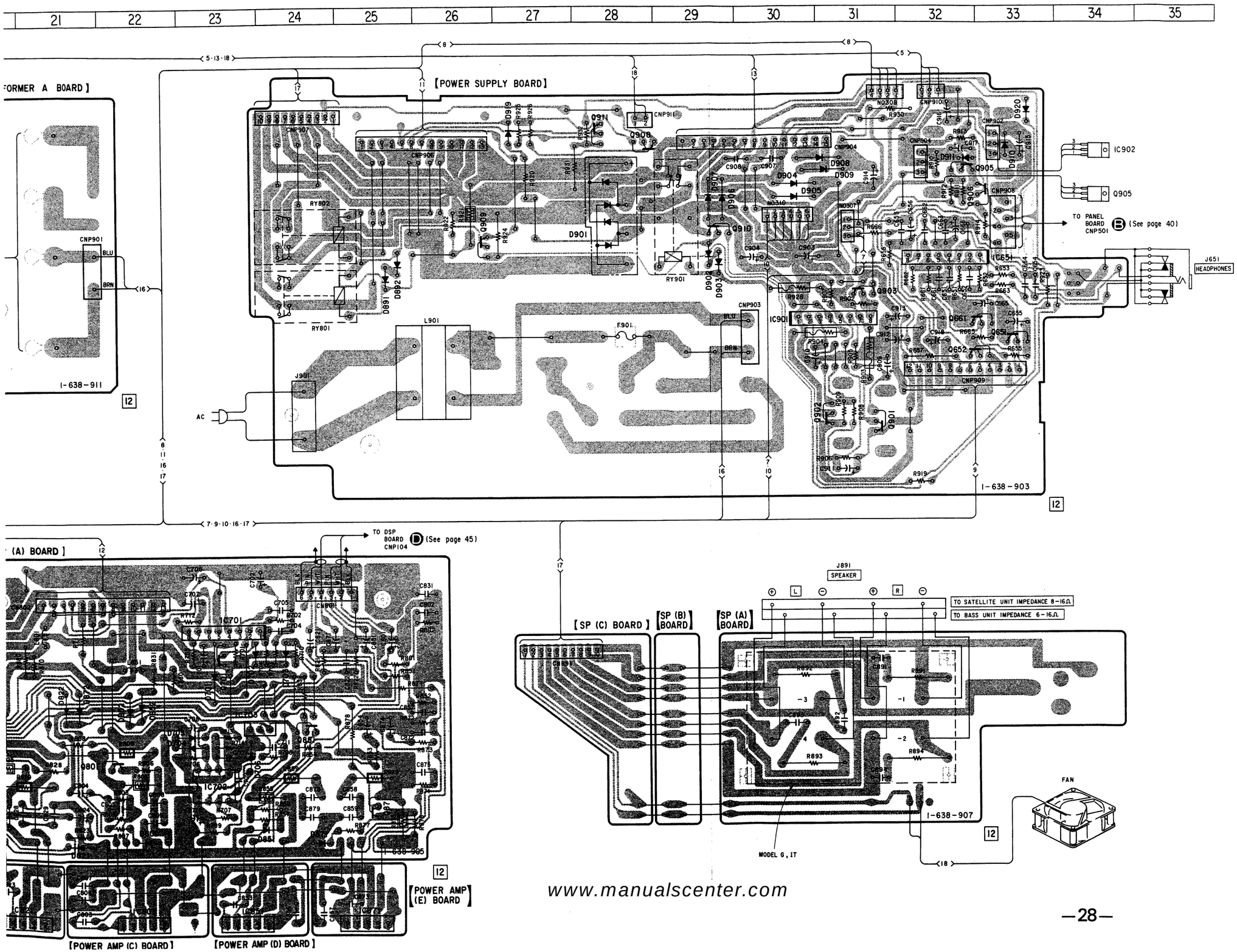

SONY-04779 / Druck 8

2-7. SCHEMATIC DIAGRAM — JACK, POWER SUPPLY SECTION —

• See page 9 to 15 for

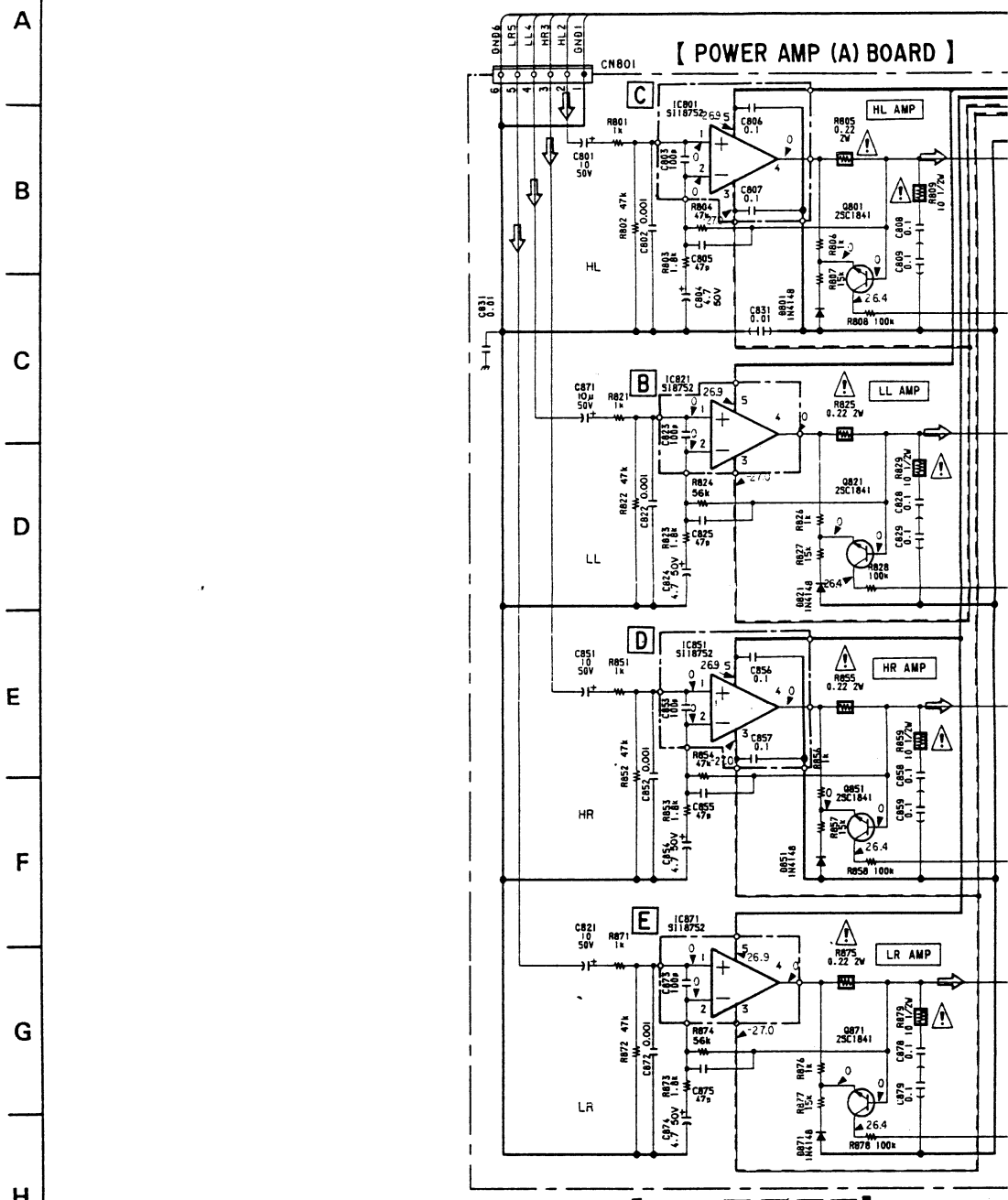

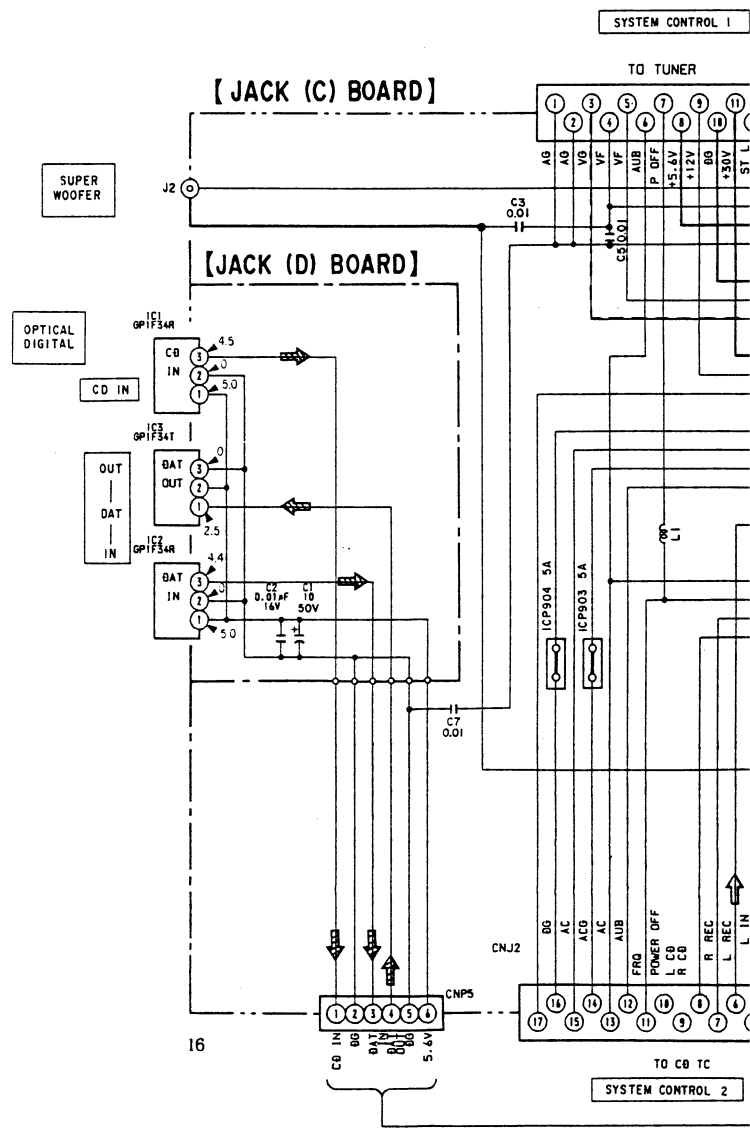

Note on Schematic Diagram :

- All capacitors are in μF unless otherwise noted. pF: μμF 50WV or less are not indicated except for electrolytics and tantalums.
- All resistors are in Ω and ¼ W or less unless otherwise specified.
- : nonflammable resistor.
- : fusible resistor.

The components identified by mark ⚠ or dotted line with mark ⚠ are critical for safety.
Replace only with part number specified.

- : B + Line.
- : B − Line.
- Voltage and waveforms are dc with respect to ground under no-signal conditions.
  no mark : CD, VIDEO 1
- Voltages are taken with a VOM (input impedance 10 MΩ).
- Waveforms are taken with a oscilloscope.
- Circled numbers refer to waveforms.
- Signal path.
  : sound signal
  : CD
  : digital out

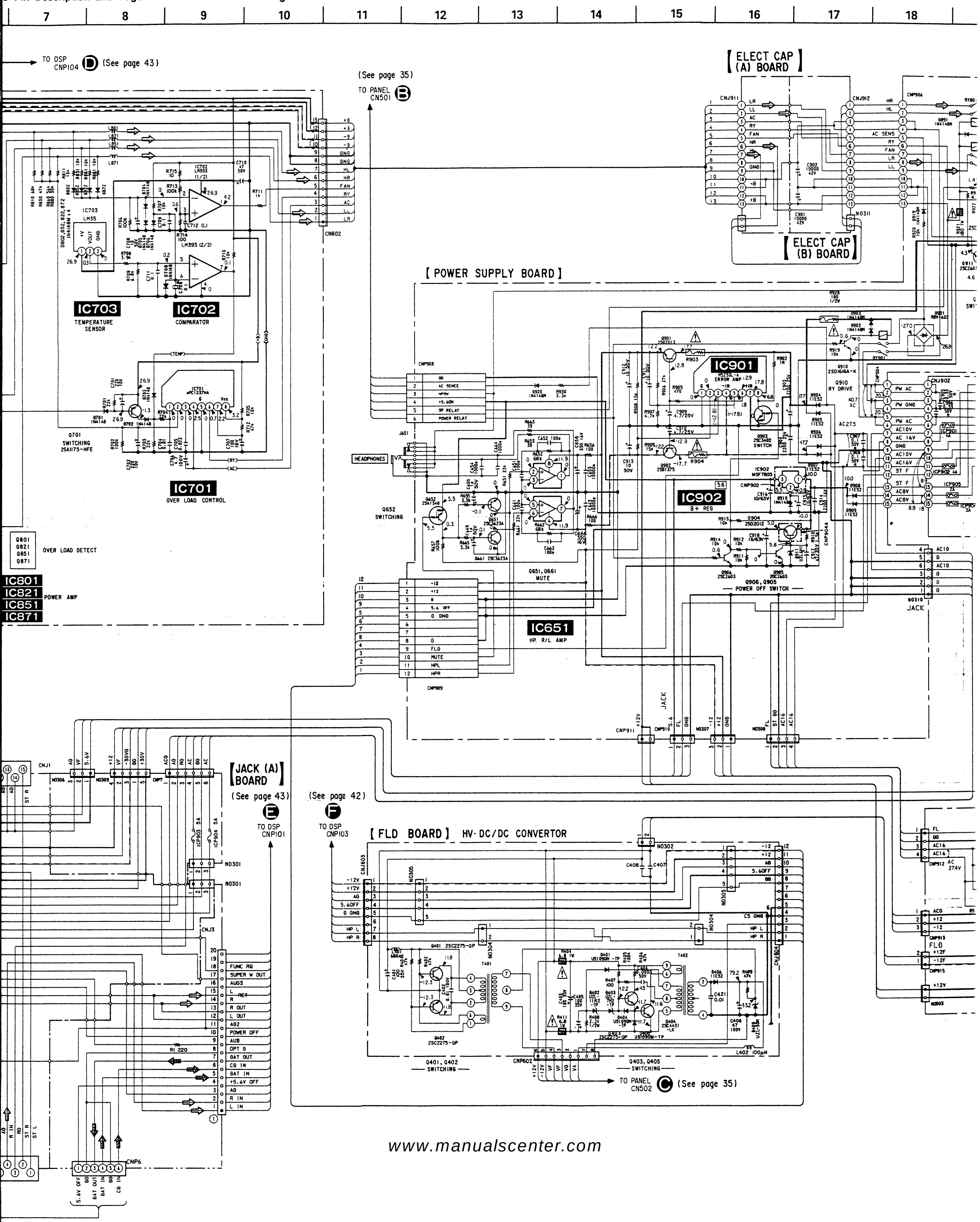

SUPPLY SECTION — • See page 9 to 15 for IC Pin Description and Page 18 to 20 for IC Block Diagrams.

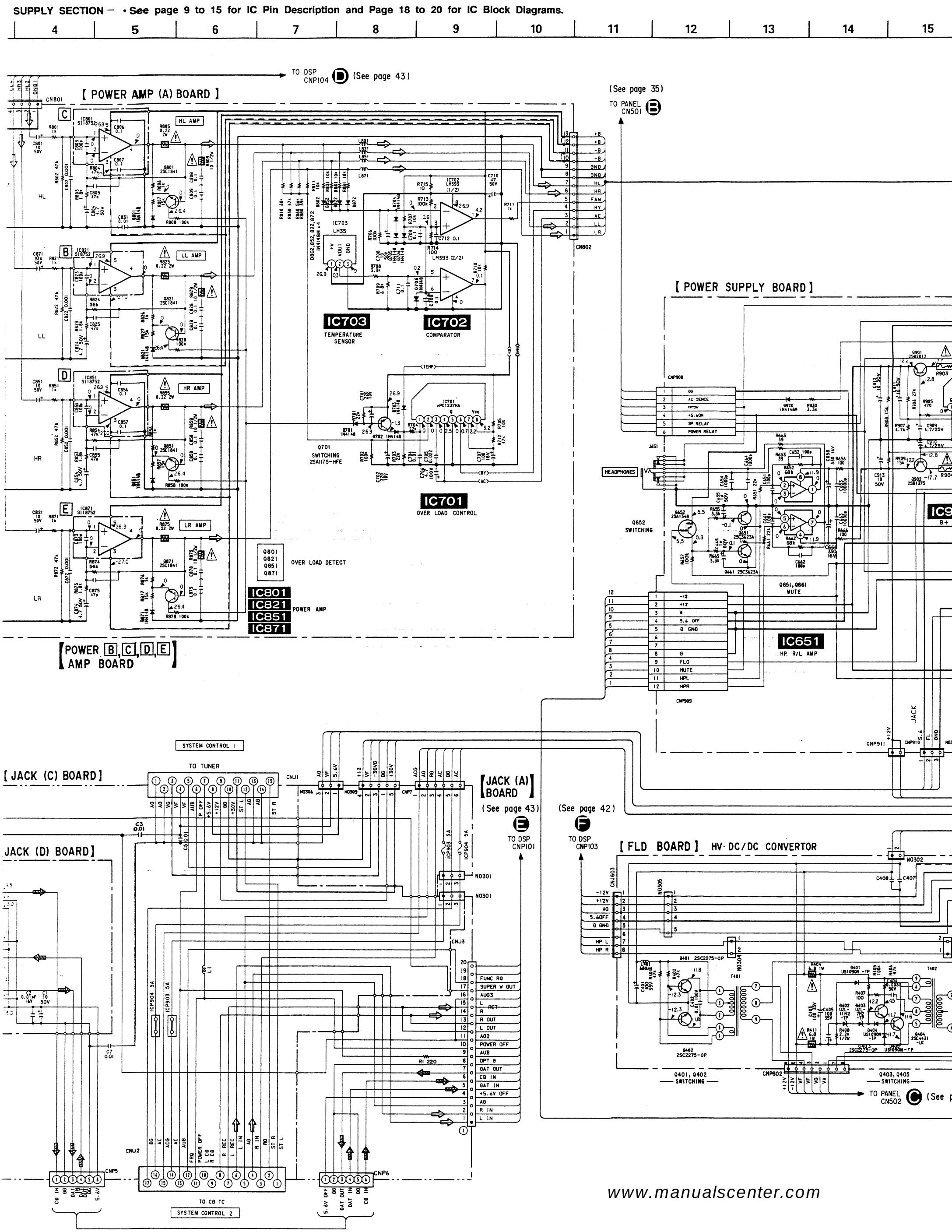

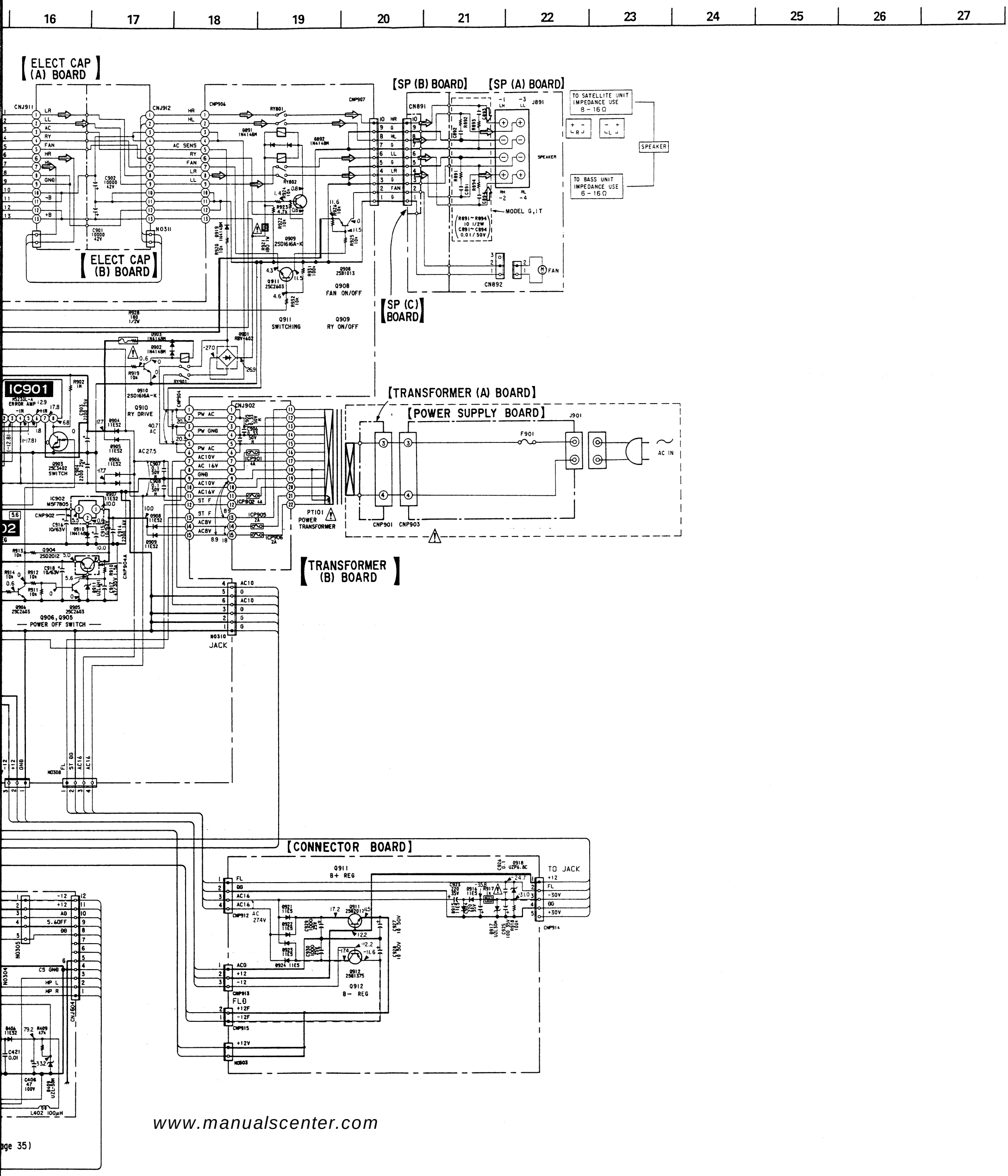

2-8. SCHEMATIC DIAGRAM — PANEL SECTION —

• See page 9 to 15 for IC Pin Description and Page 18 to 20 for IC Block Diagrams. See page 29 S

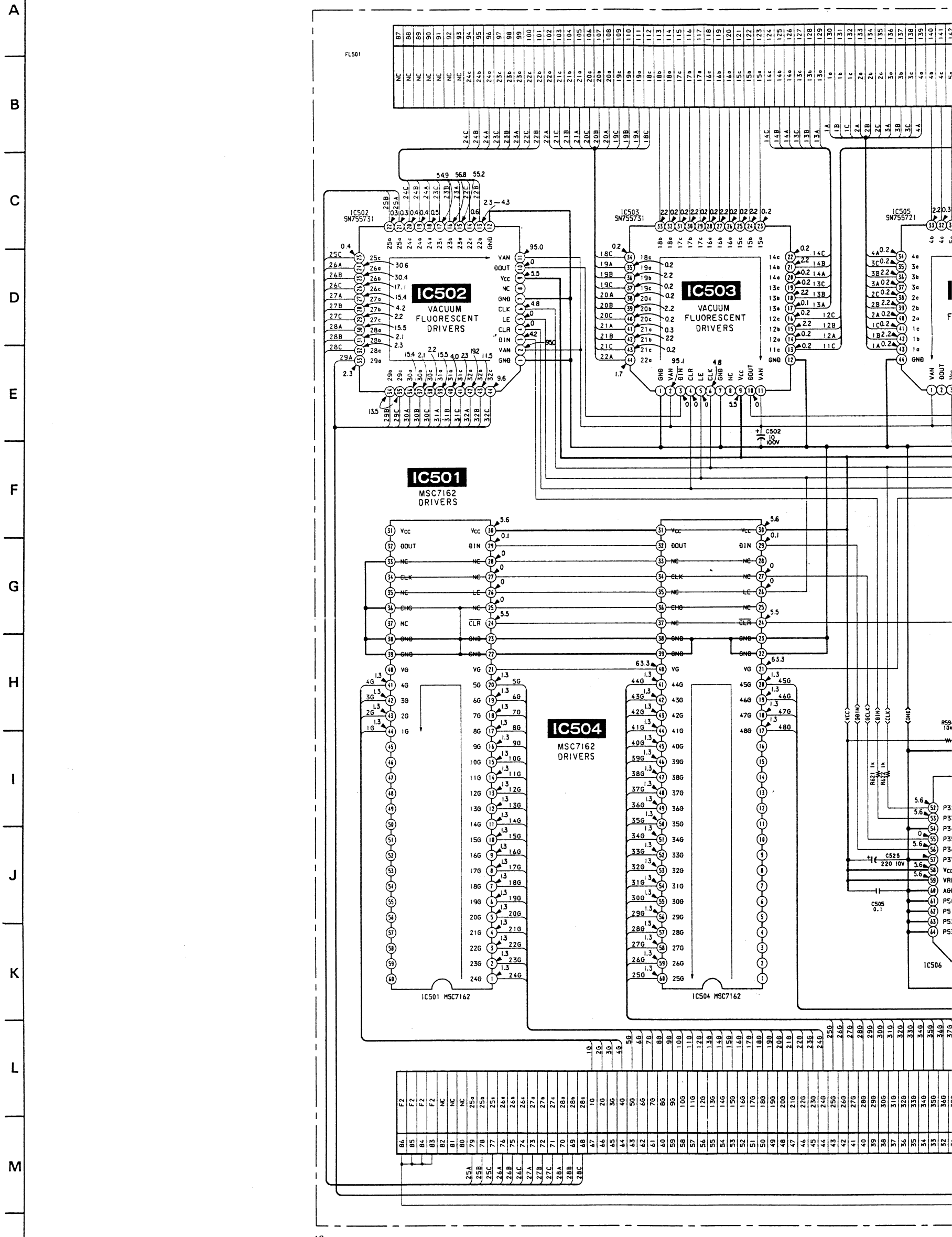

16

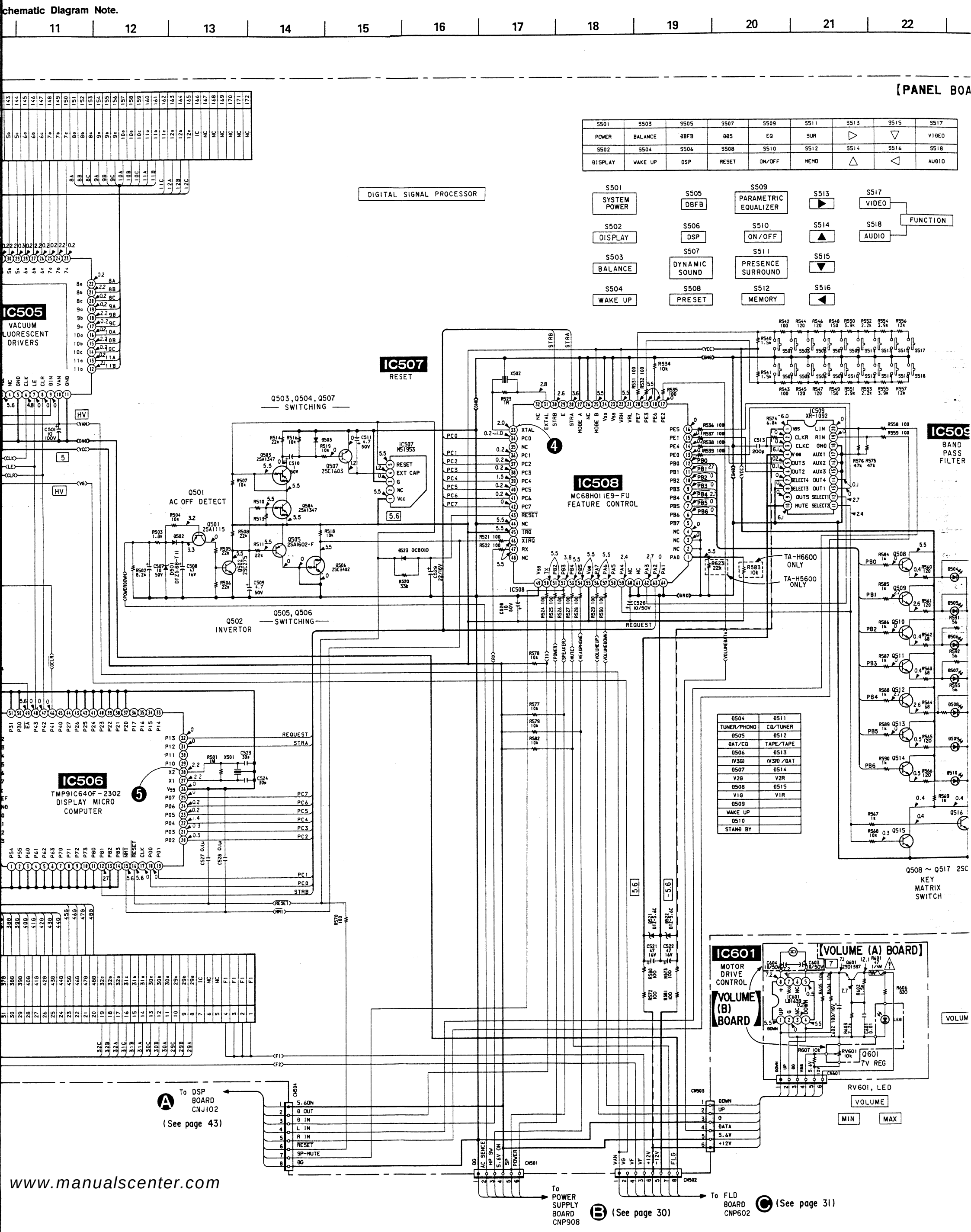

S501	S503	S505	S507	S509	S511	S513	S515	S517
POWER	BALANCE	DBFB	DDS	EQ	SUR	▷	▽	VIDEO
S502	S504	S506	S508	S510	S512	S514	S516	S518
DISPLAY	WAKE UP	DSP	RESET	ON/OFF	MEMO	△	◁	AUDIO

S501 SYSTEM POWER	S505 DBFB	S509 PARAMETRIC EQUALIZER	S513 ▶	S517 VIDEO
S502 DISPLAY	S506 DSP	S510 ON/OFF	S514 ▲	S518 AUDIO
S503 BALANCE	S507 DYNAMIC SOUND	S511 PRESENCE SURROUND	S515 ▼	FUNCTION
S504 WAKE UP	S508 PRESET	S512 MEMORY	S516 ◀	

DSP	DSP
TUNER/PHONO	CD/TUNER
DSP	DSP
DAT/CD	TAPE/TAPE
DSP	DSP
(V3G)	(V3R) /DAT
DSP	DSP
V2G	V2R
DSP	DSP
V1G	V1R
DSP	
WAKE UP	
DSP	
STAND BY	

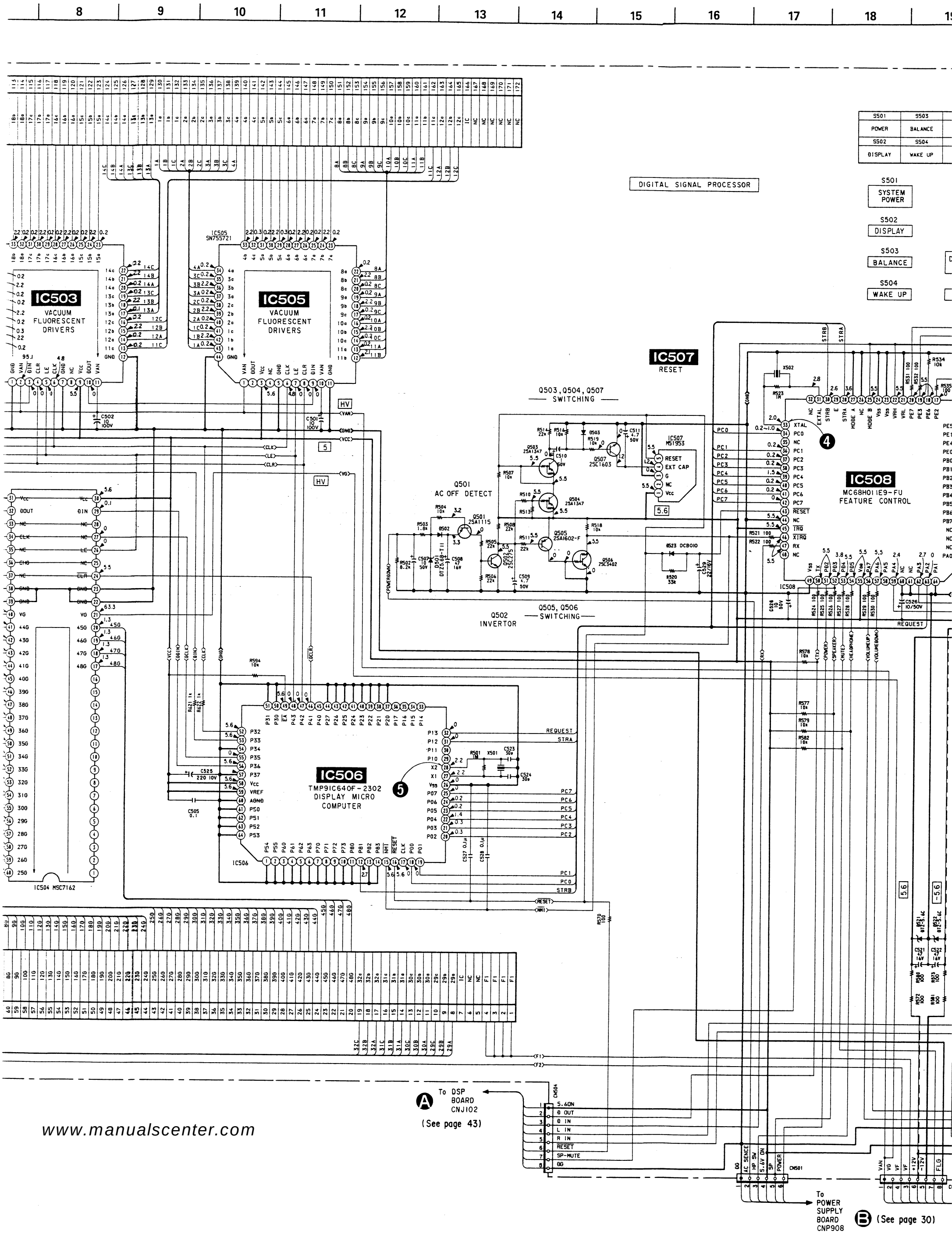

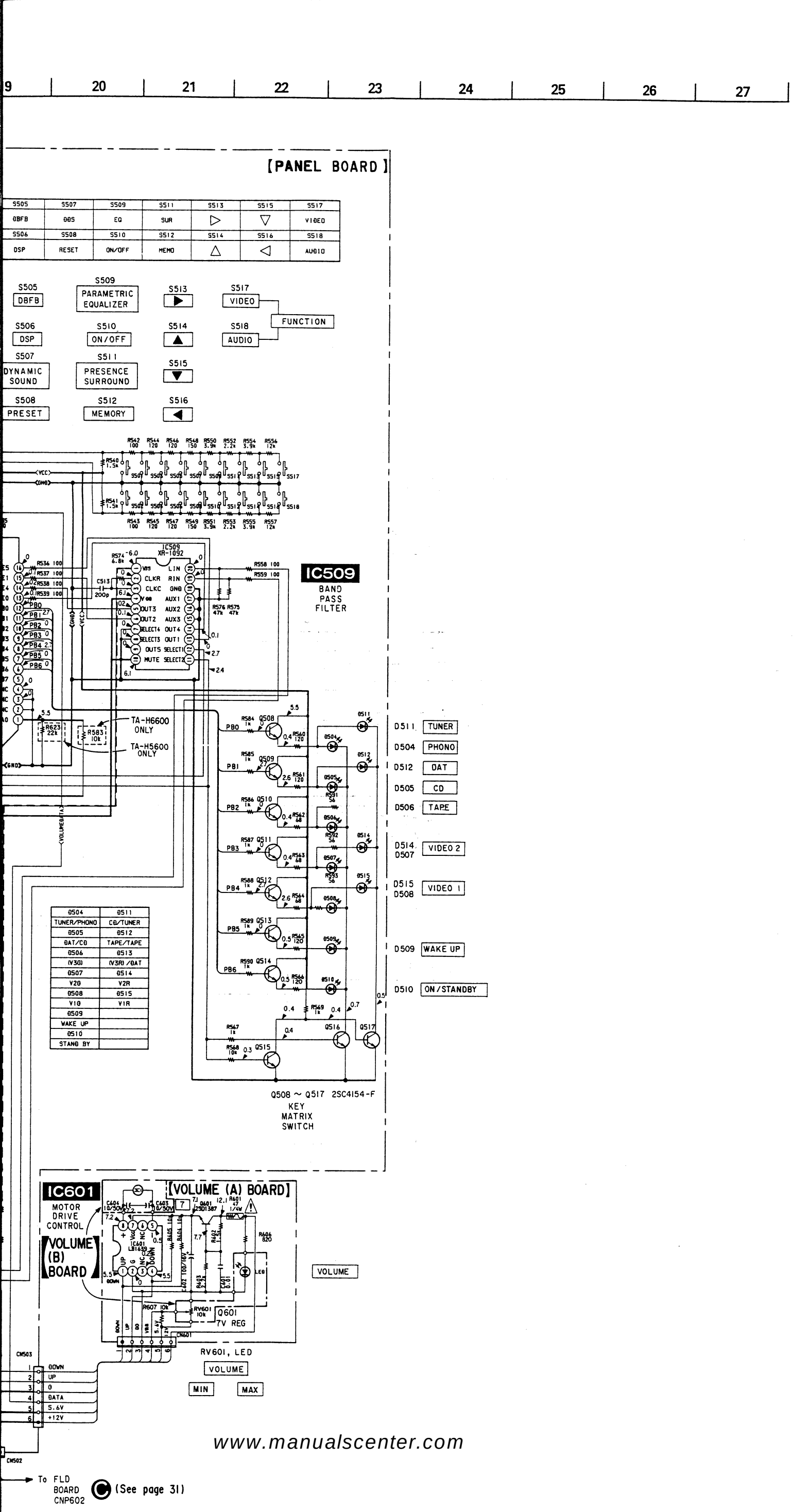

D504	D511
TUNER/PHONO	CD/TUNER
D505	D512
DAT/CD	TAPE/TAPE
D506	D513
(V3G)	(V3R) /DAT
D507	D514
V2G	V2R
D508	D515
V1G	V1R
D509	
WAKE UP	
D510	
STAND BY	

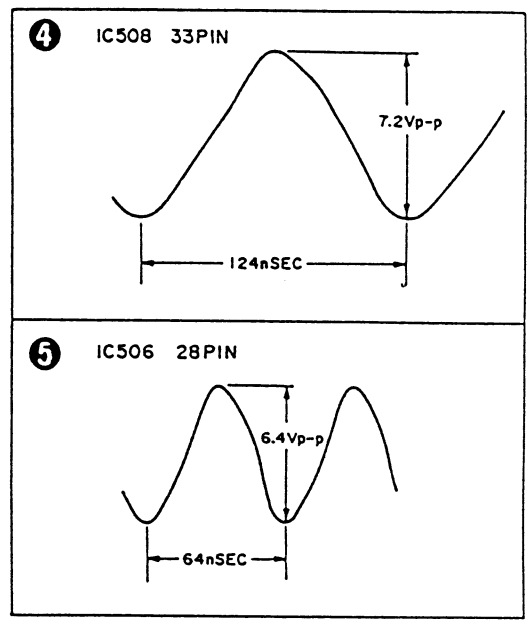

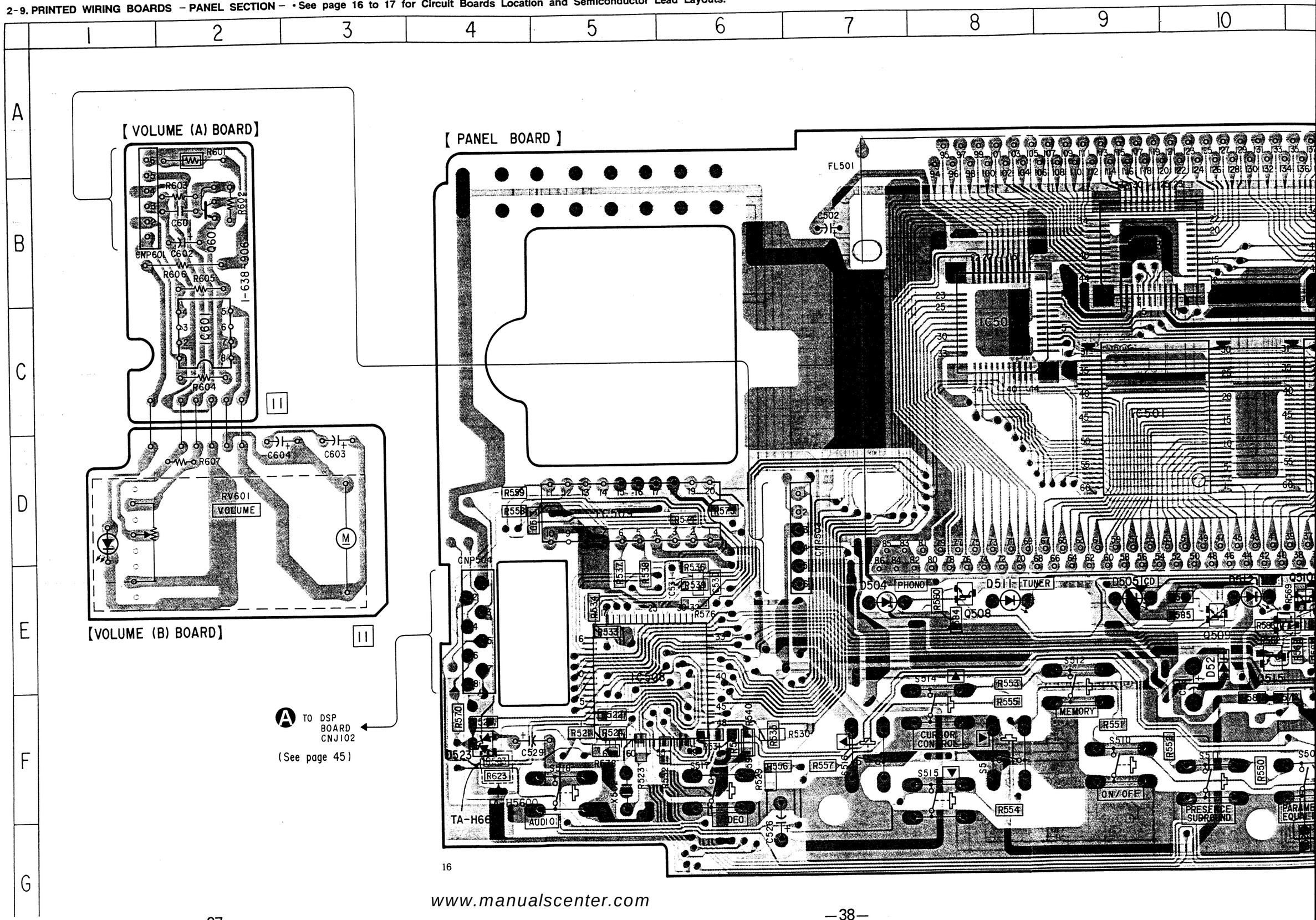

16

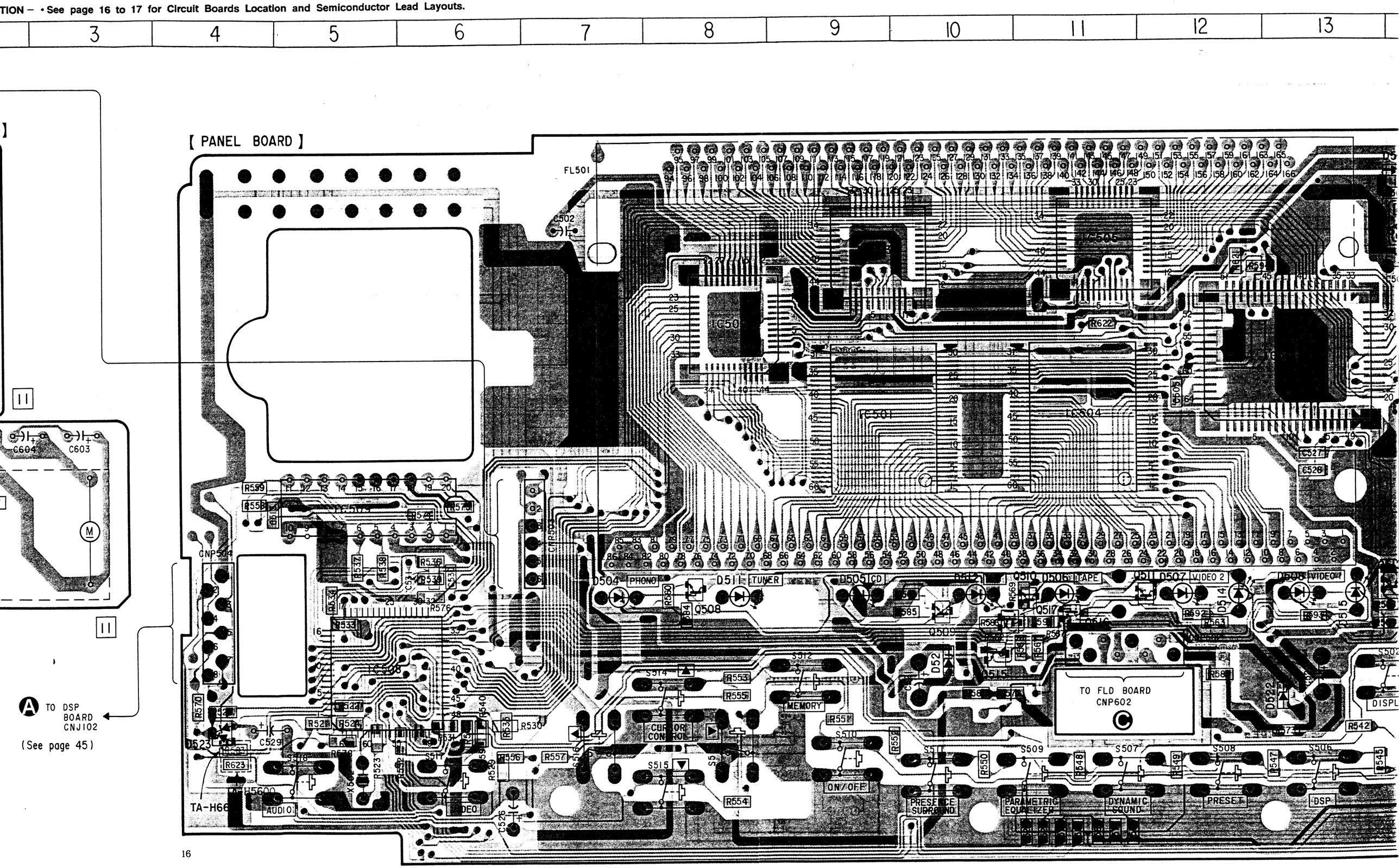

16

4 5 6 7 8 9 10 11 12 13 14

【 PANEL BOARD 】

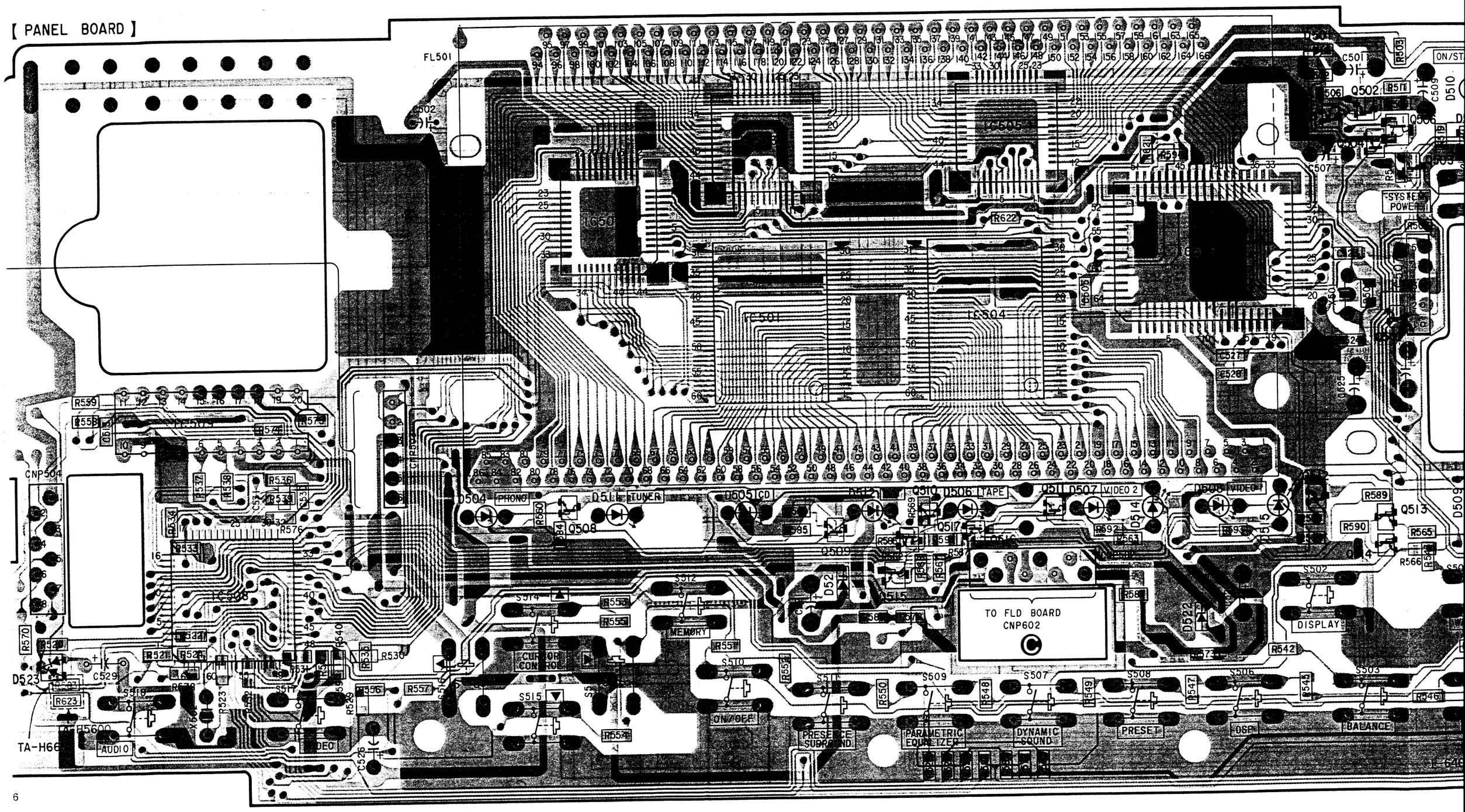

6

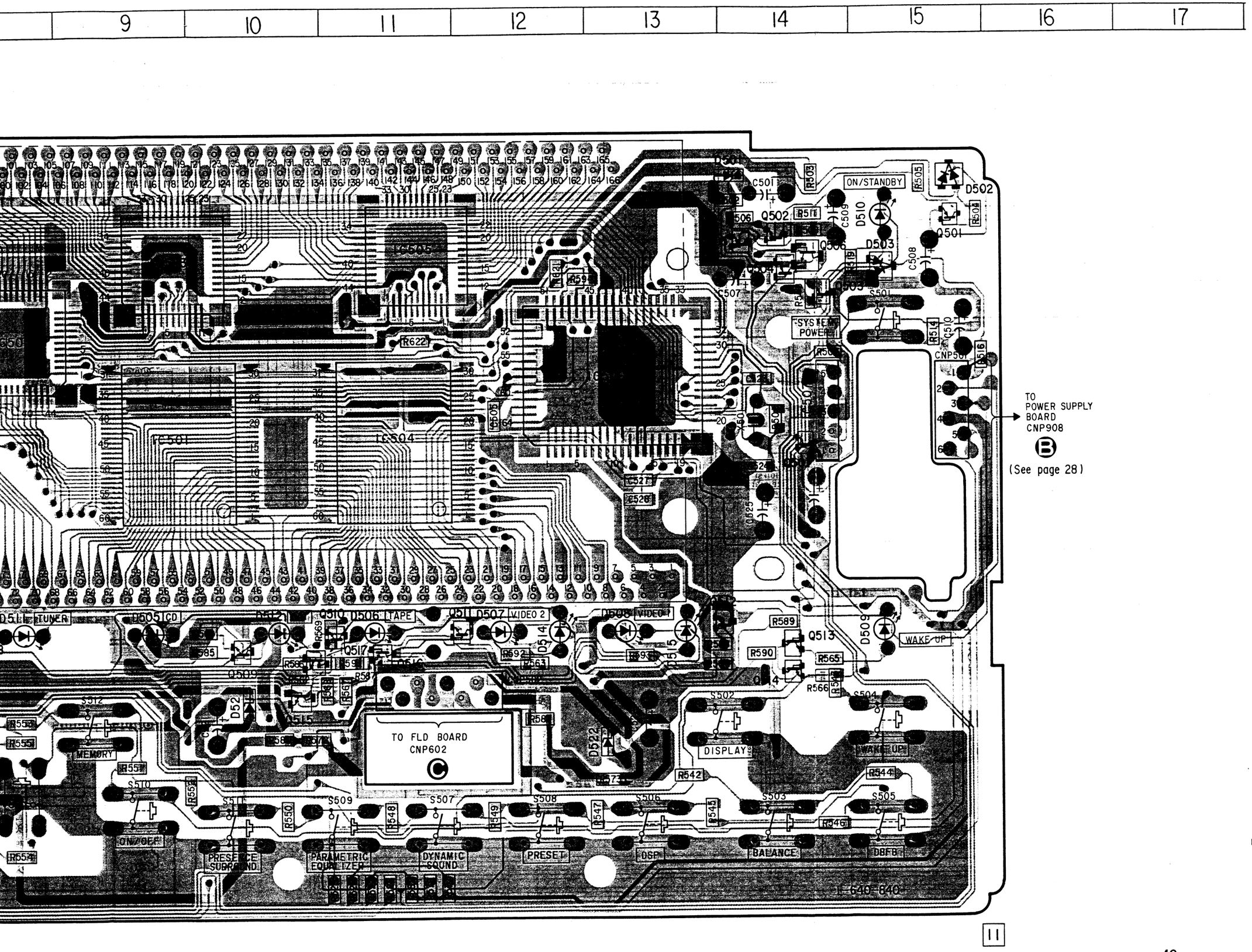

· Semiconductor Location

Ref. No.	Location
D501	B-14
D502	B-15
D503	B-15
D504	E-7
D505	E-9
D506	E-11
D507	E-12
D508	E-13
D509	E-15
D510	B-15
D511	E-18
D512	E-10
D513	E-11
D514	E-12
D515	E-13
D521	E-10
D522	F-13
D523	E-4
IC501	C-9
IC502	C-8
IC503	B-9
IC504	C-11
IC505	B-11
IC506	C-13
IC507	C-14
IC508	E-5
IC509	D-5
Q501	B-15
Q502	B-14
Q503	B-14
Q504	B-14
Q505	B-14
Q506	B-14
Q507	D-14
Q508	E-8
Q509	E-10
Q510	E-11
Q511	E-12
Q512	E-14
Q513	E-14
Q514	E-14
Q515	E-10
Q516	E-11
Q517	E-11

Note on Mounting Diagram :

- ○—— : Parts extracted from the component side.
- ⊡← : Indicates side identified with part number.
- ● : Through hole.
- ▬ : Pattern on the side which is seen.
- ▒ : Pattern of the rear side.

2-10. SCHEMATIC DIAGRAM — DSP SECTION — • See page 9 to 15 for IC Pin Description and Page 18 to 20 for IC Block Diagrams. See

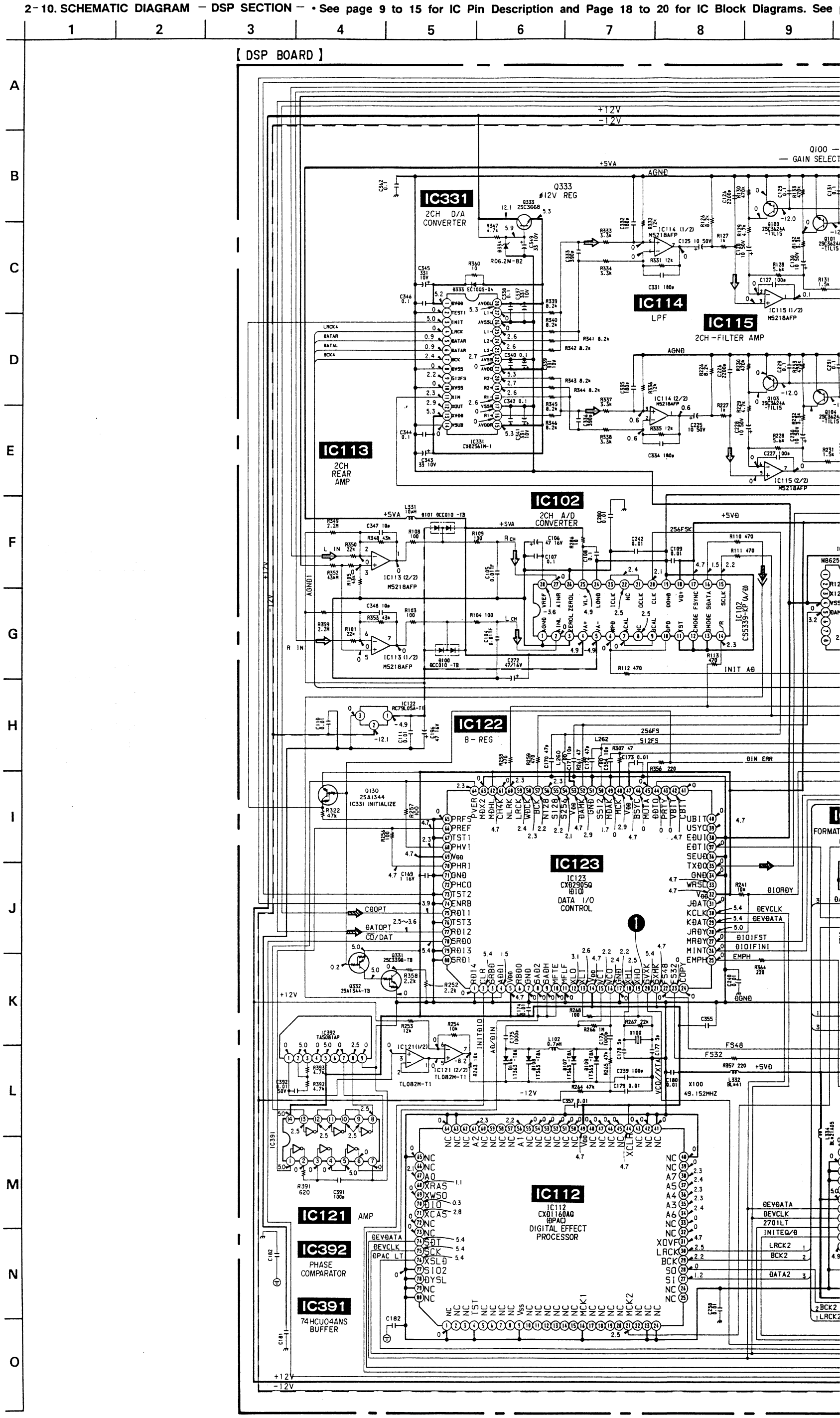

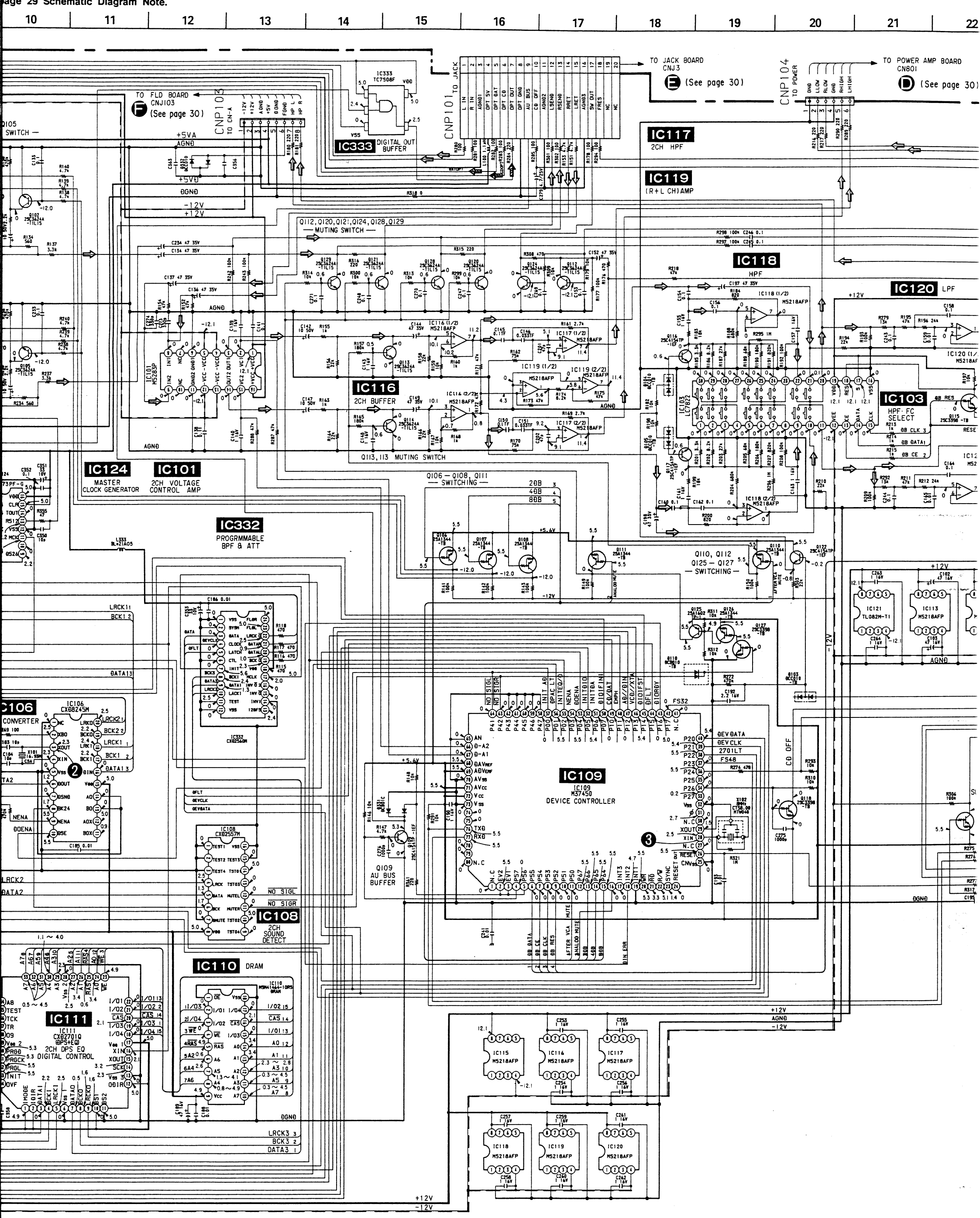

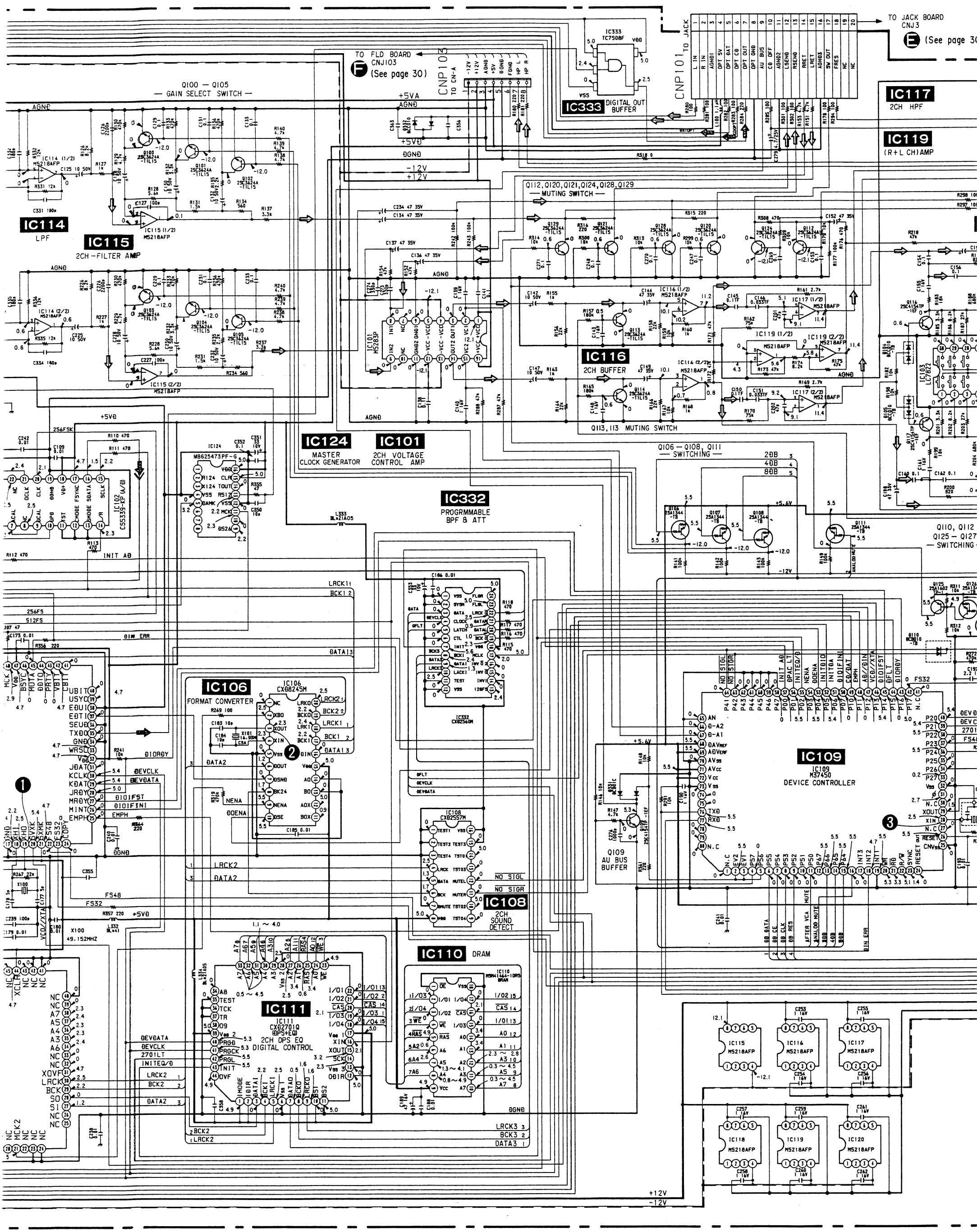

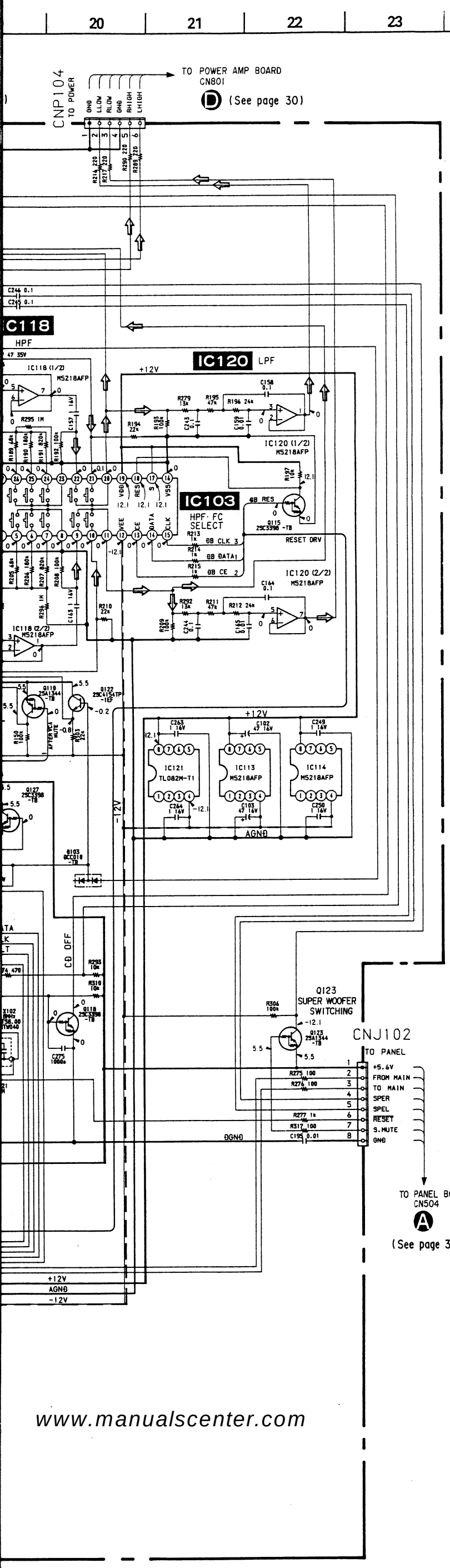

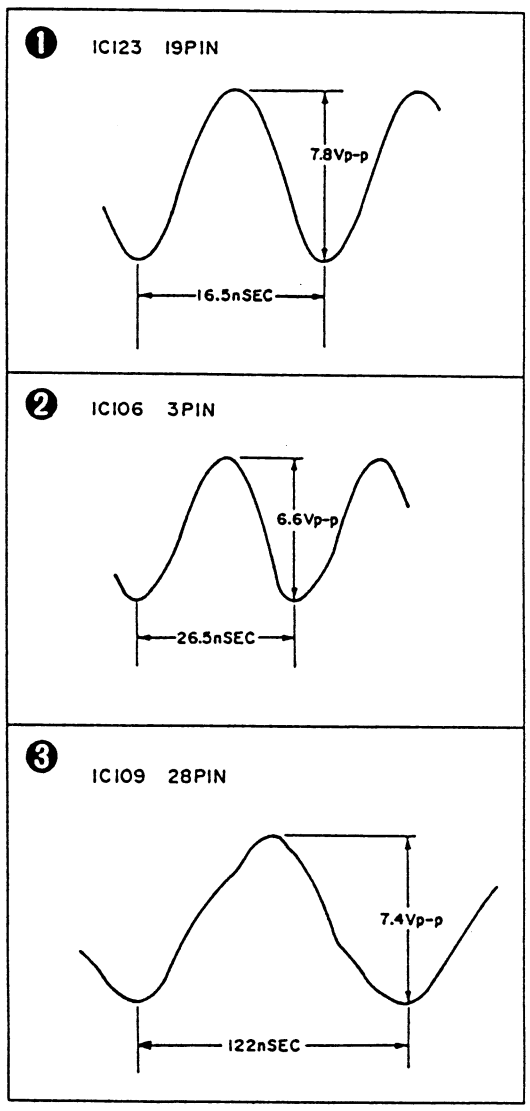

2-11. PRINTED WIRING BOARDS – DSP SECTION – • See page 16 to 17 for Circuit Boards Location and Semiconductor Lead Layouts.

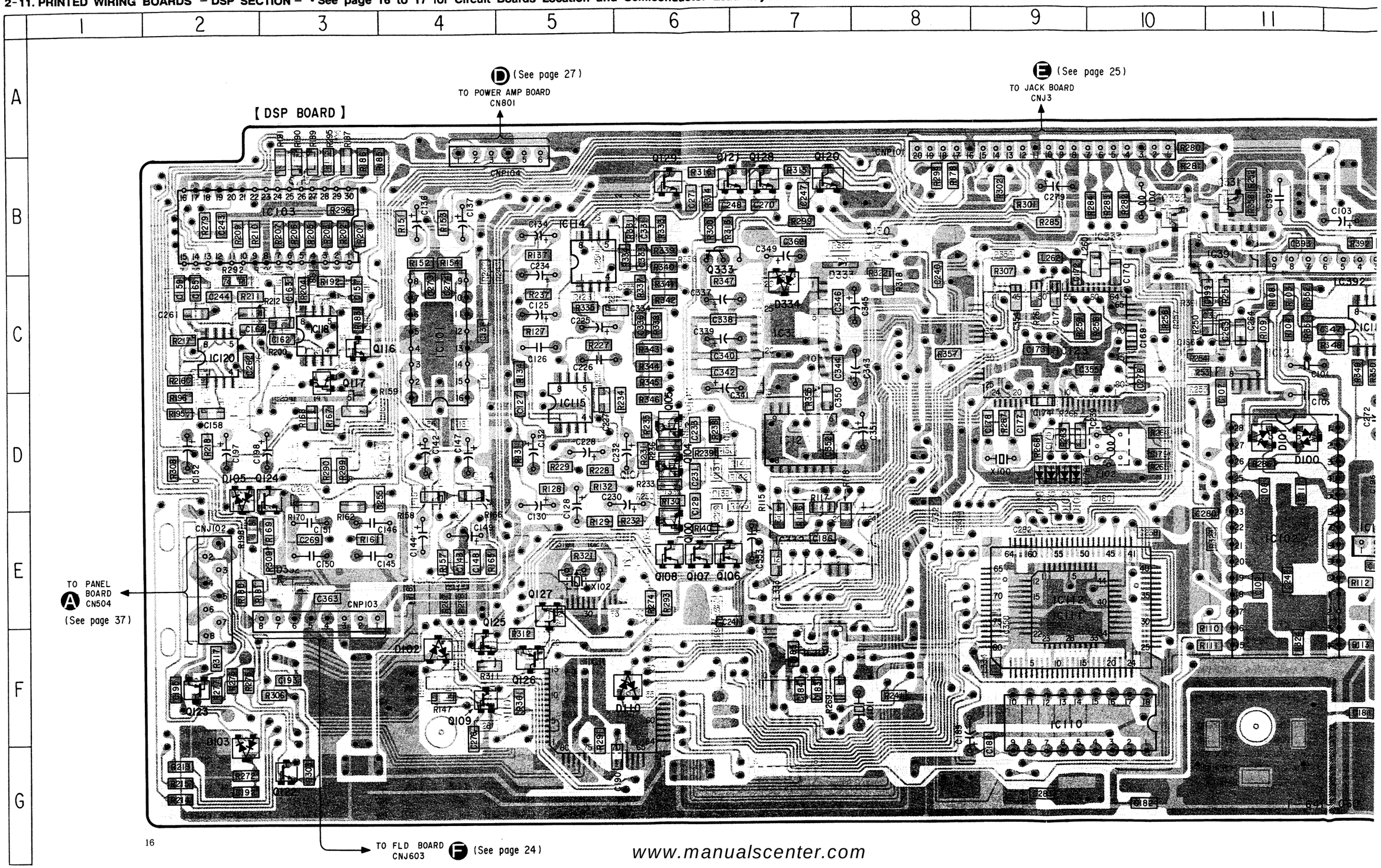

SONY-04779 / Druck 9

emiconductor Lead Layouts.

6	7	8	9	10	11	12	13	14	15

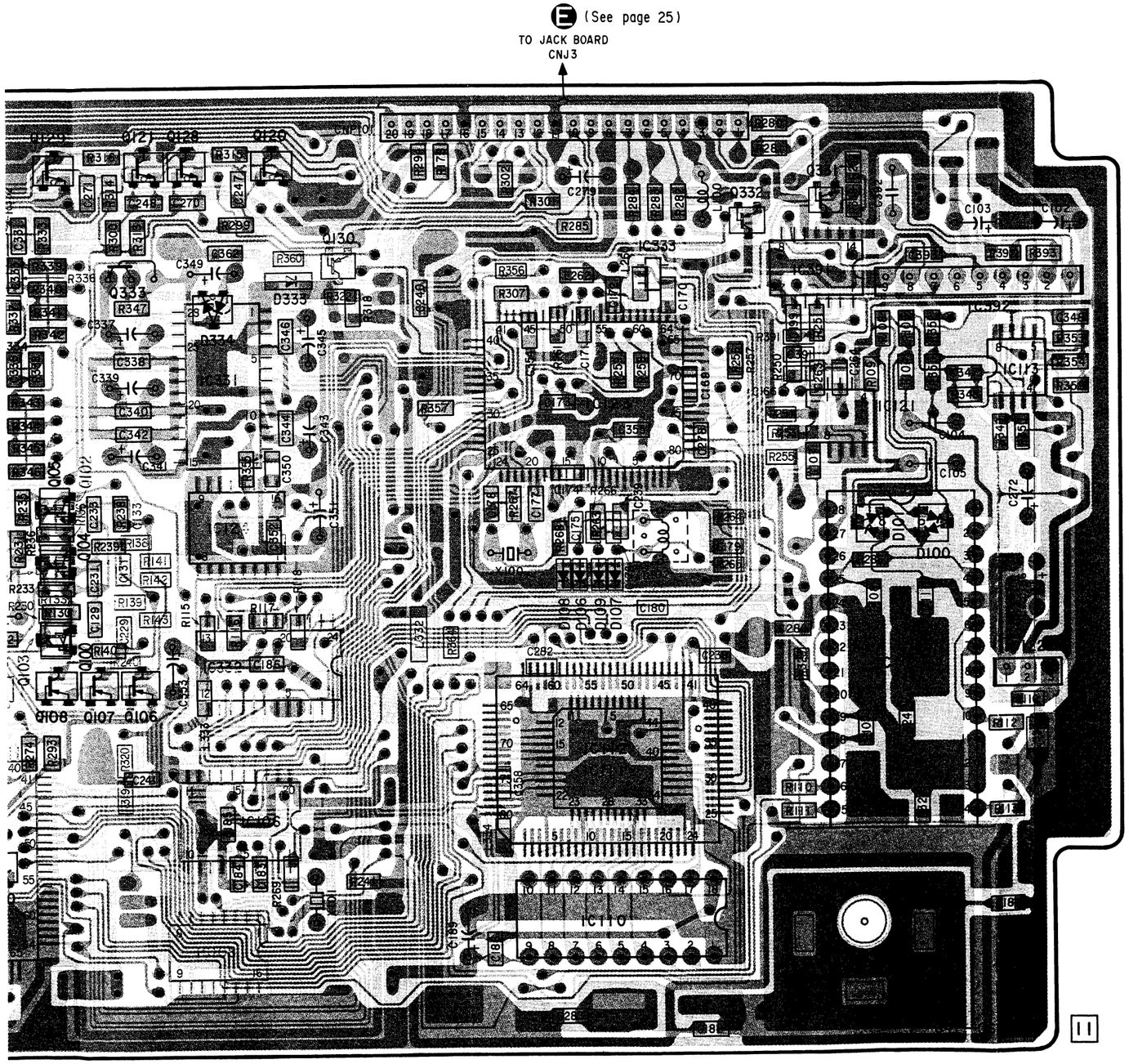

· Semiconductor Location

Ref. No.	Location	Ref. No.	Location
D100	D-11	Q125	F-4
D101	D-11	Q126	F-5
D102	F-4	Q127	E-5
D103	G-2	Q128	B-7
D104	D-4	Q129	B-6
D105	D-2	Q130	B-8
D106	D-9	Q331	B-11
D107	D-9	Q332	B-10
D108	D-9	Q333	B-6
D109	D-9		
D110	F-6		
D332	E-3		
D333	B-7		
D334	C-7		
IC101	C-4		
IC102	E-11		
IC103	B-3		
IC106	F-7		
IC108	G-7		
IC109	F-5		
IC110	F-9		
IC111	F-9		
IC112	E-9		
IC113	C-12		
IC114	B-5		
IC115	D-5		
IC116	D-3		
IC117	D-3		
IC118	C-3		
IC119	C-2		
IC120	C-2		
IC121	C-11		
IC122	E-12		
IC123	C-9		
IC124	D-7		
IC331	C-7		
IC332	E-7		
IC333	B-10		
IC391	B-11		
IC392	B-12		
Q100	E-6		
Q101	D-6		
Q102	D-6		
Q103	E-6		
Q104	D-6		
Q105	D-6		
Q106	E-6		
Q107	E-6		
Q108	E-6		
Q109	F-4		
Q110	F-4		
Q111	F-4		
Q112	D-2		
Q113	D-4		
Q114	D-4		
Q115	B-3		
Q116	C-3		
Q117	C-3		
Q118	E-6		
Q120	B-7		
Q121	B-7		
Q122	G-3		
Q123	F-2		
Q124	D-3		

Note on Mounting Diagram :

- o—— : Parts extracted from the component side.
- ● : Through hole.
- ▒ : Pattern on the side which is seen.
- ▒ : Pattern of the rear side.

SONY-04779 / Druck 10

SECTION 3
EXPLODED VIEWS

NOTE :
- -XX, -X mean standardized parts, so they may have some differences from the original one.
- Color Indication of Appearance Parts
  Example :
  KNOB, BALANCE (WHITE)...(RED)
  ↑ Parts color ↑ Cabinet's color
- Items marked "*" are not stocked since they are seldom required for routine service. Some delay should be anticipated when ordering these items.
- The mechanical parts with no reference number in the exploded views are not supplied.
- Hardware (# mark) list is given in the last of this parts list.

The components identified by mark ⚠ or dotted line with mark ⚠ are critical for safety.
Replace only with part number specified.

- G : Germany model
  IT : Itallian model

3-1. OVERALL SECTION 1

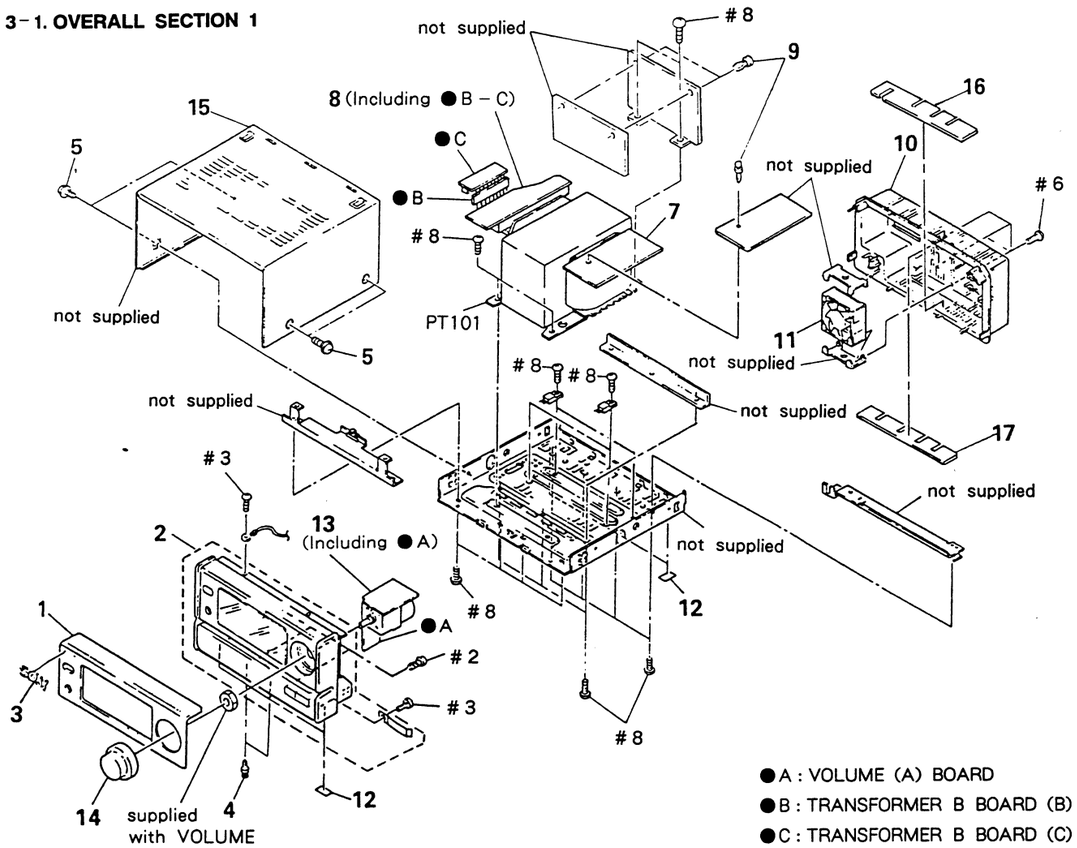

●A : VOLUME (A) BOARD
●B : TRANSFORMER B BOARD (B)
●C : TRANSFORMER B BOARD (C)

Ref. No.	Part No.	Description	Remarks
1	X-4941-948-1	PANEL ASSY, FRONT	
2	X-4941-537-1	PANEL (BASE) ASSY (H5600)	
	X-4941-539-1	PANEL (BASE) ASSY (H6600)	
3	4-942-636-01	EMBLEM (NO.3.5), SONY	
4	4-812-134-00	RIVET NYLON, 3.5	
5	3-363-099-01	SCREW (CASE +3X8 TP2)	
7	* 1-638-911-13	TRANSFORMER (A) BOARD	
8	* 1-638-912-12	TRANSFORMER (B) BOARD	
9	4-812-134-11	RIVET NYLON, 3.5	
10	4-943-336-41	PANEL, BACK	
11	1-541-860-11	MOTOR, DC FAN	
12	4-930-336-01	FOOT (FELT)	
13	* 1-638-906-12	VOLUME BOARD	
14	X-4941-532-1	KNOB (VOLUME) ASSY	
15	* 4-932-841-41	CASE	
16	4-947-205-01	PLATE (A), ORNAMENTAL	
17	4-947-206-01	PLATE (B), ORNAMENTAL	
PT101	⚠1-450-355-11	TRANSFORMER, POWER (UK)	
	⚠1-450-356-11	TRANSFORMER, POWER (AEP, G, IT)	

3-2. OVERALL SECTION 2

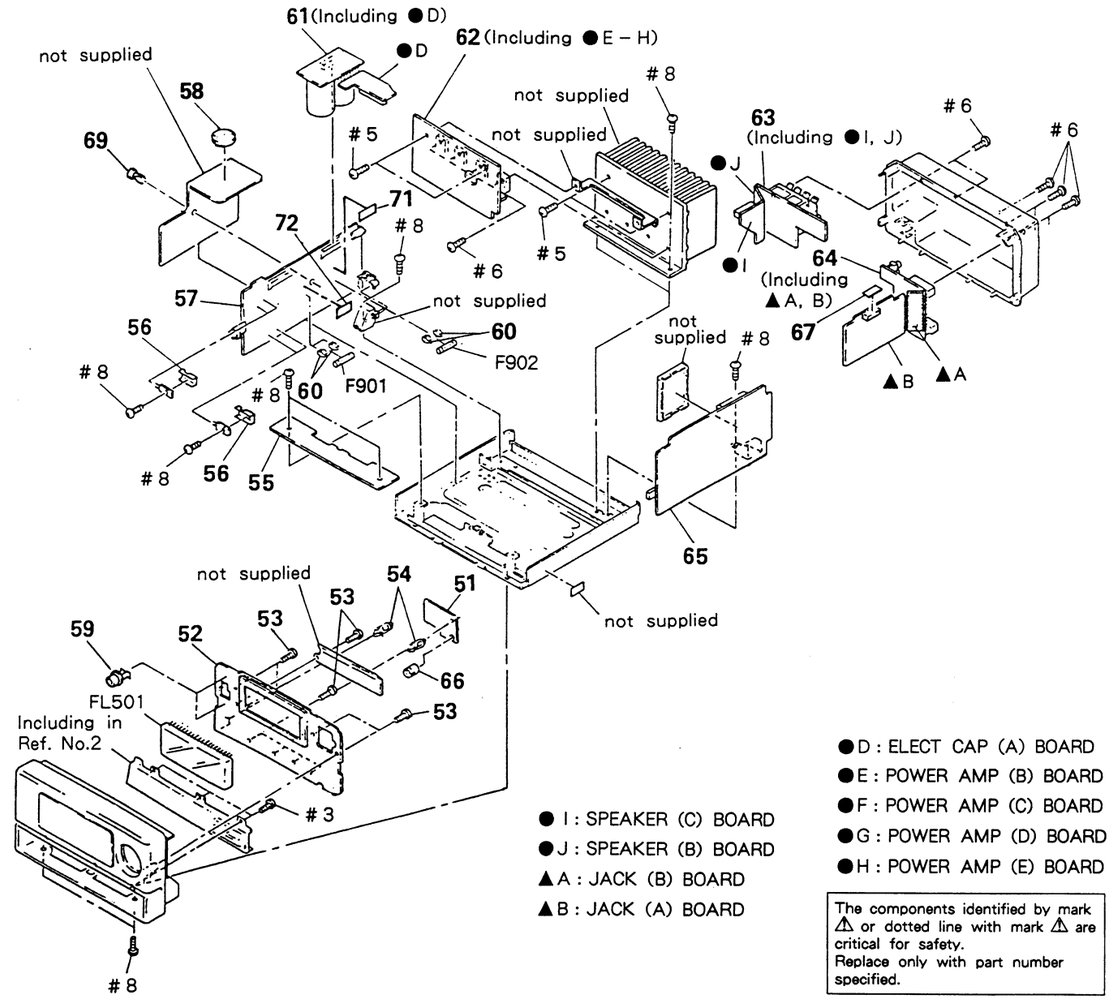

●I : SPEAKER (C) BOARD
●J : SPEAKER (B) BOARD
▲A : JACK (B) BOARD
▲B : JACK (A) BOARD

●D : ELECT CAP (A) BOARD
●E : POWER AMP (B) BOARD
●F : POWER AMP (C) BOARD
●G : POWER AMP (D) BOARD
●H : POWER AMP (E) BOARD

The components identified by mark ⚠ or dotted line with mark ⚠ are critical for safety.
Replace only with part number specified.

Ref. No.	Part No.	Description	Remarks
51	* 1-638-909-12	CONNECTOR BOARD	
52	* A-4341-606-A	PANEL BOARD, COMPLETE (H6600)	
	* A-4345-734-A	PANEL BOARD, COMPLETE (H5600)	
53	4-928-635-01	SCREW, +BV (2.6X8) TAPPING	
54	* 3-682-419-71	HOLDER, PCB	
55	* A-4341-598-A	FLD BOARD, COMPLETE	
56	* 3-309-144-21	HEAT SINK	
57	* A-4341-619-A	POWER SUPPLY BOARD, COMPLETE (AEP, UK)	
	* A-4341-623-A	POWER SUPPLY BOARD, COMPLETE (G, IT)	
58	* 4-932-810-11	CUSHION (FL)	
59	* 3-362-478-21	HOLDER (T), LED	
60	1-533-213-31	HOLDER, FUSE	
61	* 1-638-910-12	ELECT CAP BOARD	
62	* A-4341-620-A	POWER AMP BOARD, COMPLETE (AEP, UK)	
62	* A-4341-624-A	POWER AMP BOARD, COMPLETE (G, IT)	
63	* 1-638-907-12	SPEAKER BOARD	
64	* 1-638-904-12	JACK BOARD	
65	* A-4341-586-A	DSP BOARD, COMPLETE	
66	* 4-886-873-00	SPACER	
67	4-860-518-00	CUSHION	
69	4-812-134-11	RIBET NYLON, 3.5	
70	* 3-561-427-21	CUSHION	
72	3-701-947-15	LABEL (T2.5A), FUSE	
F901	⚠1-532-286-00	FUSE (T2.5A)	
FL501	1-519-654-11	INDICATOR TUBE, FLUORESCENT	

SONY-04779 / Druck 11

3-2. OVERALL SECTION 2

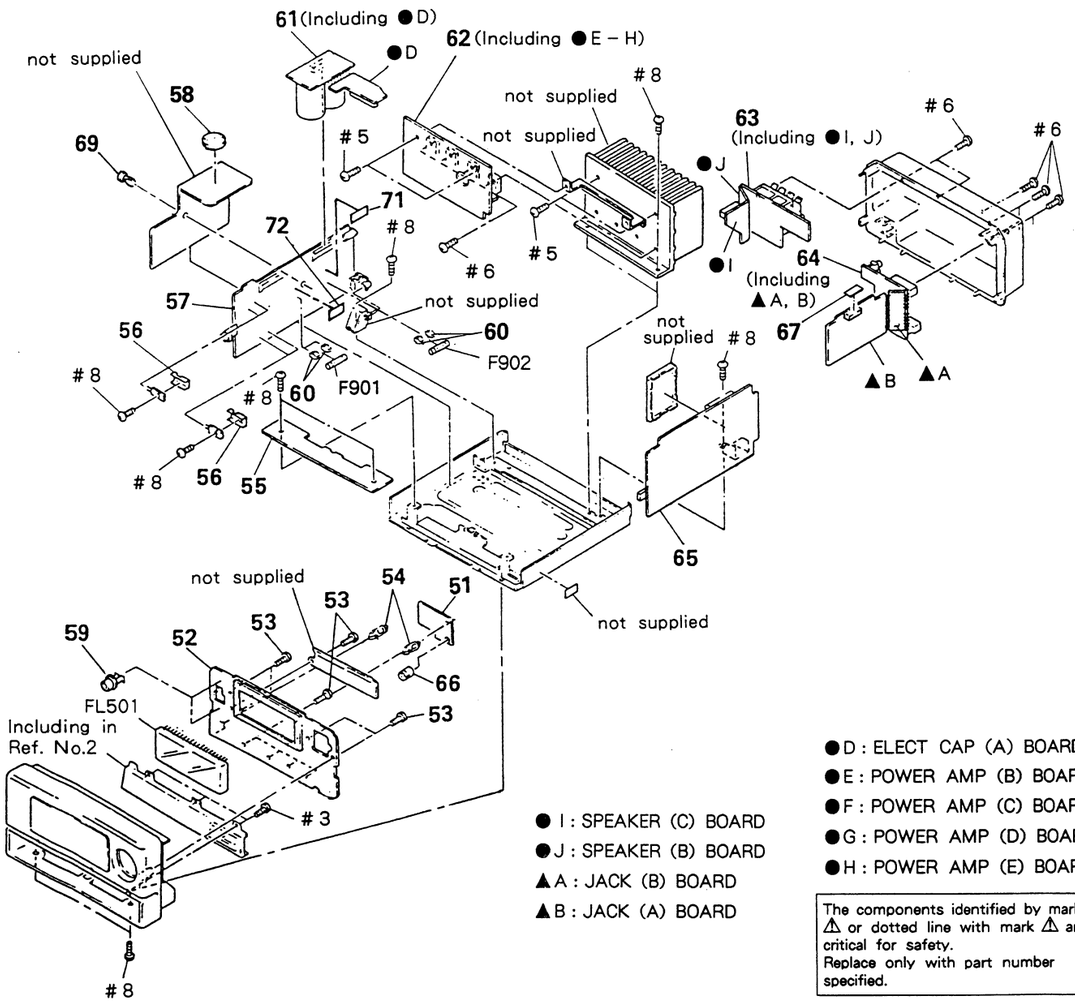

● I : SPEAKER (C) BOARD
●J : SPEAKER (B) BOARD
▲A : JACK (B) BOARD
▲B : JACK (A) BOARD

●D : ELECT CAP (A) BOARD
●E : POWER AMP (B) BOARD
●F : POWER AMP (C) BOARD
●G : POWER AMP (D) BOARD
●H : POWER AMP (E) BOARD

The components identified by mark ⚠ or dotted line with mark ⚠ are critical for safety.
Replace only with part number specified.

Ref. No.	Part No.	Description	Remarks
51	‡ 1-638-909-12	CONNECTOR BOARD	
52	‡ A-4341-606-A	PANEL BOARD, COMPLETE (H6600)	
	‡ A-4345-734-A	PANEL BOARD, COMPLETE (H5600)	
53	4-928-635-01	SCREW, +BV (2.6X8) TAPPING	
54	‡ 3-682-419-71	HOLDER, PCB	
55	‡ A-4341-598-A	FLD BOARD, COMPLETE	
56	‡ 3-309-144-21	HEAT SINK	
57	‡ A-4341-619-A	POWER SUPPLY BOARD, COMPLETE (AEP, UK)	
	‡ A-4341-623-A	POWER SUPPLY BOARD, COMPLETE (G, IT)	
58	‡ 4-932-810-11	CUSHION (FL)	
59	‡ 3-362-478-21	HOLDER (T), LED	
60	1-533-213-31	HOLDER, FUSE	
61	‡ 1-638-910-12	ELECT CAP BOARD	

Ref. No.	Part No.	Description	Remarks
62	‡ A-4341-620-A	POWER AMP BOARD, COMPLETE (AEP, UK)	
62	‡ A-4341-624-A	POWER AMP BOARD, COMPLETE (G, IT)	
63	‡ 1-638-907-12	SPEAKER BOARD	
64	‡ 1-638-904-12	JACK BOARD	
65	‡ A-4341-586-A	DSP BOARD, COMPLETE	
66	‡ 4-886-873-00	SPACER	
67	4-860-518-00	CUSHION	
69	4-812-134-11	RIBET NYLON, 3.5	
70	‡ 3-561-427-21	CUSHION	
72	3-701-947-15	LABEL (T2.5A), FUSE	
F901	⚠1-532-286-00	FUSE (T2.5A)	
FL501	1-519-654-11	INDICATOR TUBE, FLUORESCENT	

SECTION 4
ELECTRICAL PARTS LIST

PANEL **DSP**

NOTE:

The components identified by mark ⚠ or dotted line with mark ⚠ are critical for safety.
Replace only with part number specified.

When indicating parts by reference number, please include the board name.

- Due to standardization, replacements in the parts list may be different from the parts specified in the diagrams or the components used on the set.
- – XX, – X mean standardized parts, so they may have some difference from the original one.
- RESISTORS
  All resistors are in ohms.
  METAL : metal-film resistor
  METAL OXIDE : Metal Oxide-film resistor
  F : nonflammable
- Items marked "‡" are not stocked since they are seldom required for routine service. Some delay should be anticipated when ordering these items.
- SEMICONDUCTORS
  In each case, u : µ, for example :
  uA... : µA... , uPA... , µPA... , uPB... , µPB... , uPC... , µPC... , uPD..., µPD...
- CAPACITORS :
  uF : µF
- COILS
  uH : µH

Ref. No.	Part No.	Description	Remarks
	‡ A-4341-606-A	PANEL BOARD, COMPLETE (H6600)	
	‡ A-4345-734-A	PANEL BOARD, COMPLETE (H5600)	
		**********	
	‡ A-4341-586-A	DSP BOARD, COMPLETE	
		**********	
	‡ 3-362-478-21	HOLDER (T), LED	
		< CAPACITOR >	
C102	1-124-589-11	ELECT 47uF 20% 16V	
C103	1-124-589-11	ELECT 47uF 20% 16V	
C104	1-136-153-00	FILM 0.01uF 5% 50V	
C105	1-136-153-00	FILM 0.01uF 5% 50V	
C106	1-124-589-11	ELECT 47uF 20% 16V	
C107	1-164-004-11	CERAMIC CHIP 0.1uF 10% 25V	
C108	1-164-004-11	CERAMIC CHIP 0.1uF 10% 25V	
C109	1-163-021-91	CERAMIC CHIP 0.01uF 10% 50V	
C110	1-163-021-91	CERAMIC CHIP 0.01uF 10% 50V	
C111	1-163-021-91	CERAMIC CHIP 0.01uF 10% 50V	
C125	1-124-915-11	ELECT 10uF 20% 63V	
C126	1-130-475-00	MYLAR 0.0022uF 5% 50V	
C127	1-163-117-00	CERAMIC CHIP 100PF 5% 50V	
C128	1-124-915-11	ELECT 10uF 20% 63V	
C129	1-164-004-11	CERAMIC CHIP 0.1uF 10% 25V	
C130	1-124-915-11	ELECT 10uF 20% 63V	
C131	1-164-004-11	CERAMIC CHIP 0.1uF 10% 25V	
C132	1-124-915-11	ELECT 10uF 20% 63V	
C133	1-164-004-11	CERAMIC CHIP 0.1uF 10% 25V	
C134	1-124-910-11	ELECT 47uF 20% 50V	
C136	1-124-910-11	ELECT 47uF 20% 50V	
C137	1-124-910-11	ELECT 47uF 20% 50V	
C138	1-164-004-11	CERAMIC CHIP 0.1uF 10% 25V	
C139	1-164-346-11	CERAMIC CHIP 1uF 16V	
C140	1-164-346-11	CERAMIC CHIP 1uF 16V	

Ref. No.	Part No.	Description	Remarks
C141	1-164-004-11	CERAMIC CHIP 0.1uF 10% 25V	
C142	1-124-915-11	ELECT 10uF 20% 63V	
C143	1-164-346-11	CERAMIC CHIP 1uF 16V	
C144	1-124-910-11	ELECT 47uF 20% 50V	
C145	1-136-165-00	FILM 0.1uF 5% 50V	
C146	1-136-159-00	FILM 0.033uF 5% 50V	
C147	1-124-915-11	ELECT 10uF 20% 63V	
C148	1-164-346-11	CERAMIC CHIP 1uF 16V	
C149	1-124-910-11	ELECT 47uF 20% 50V	
C150	1-136-165-00	FILM 0.1uF 5% 50V	
C151	1-136-159-00	FILM 0.033uF 5% 50V	
C152	1-124-910-11	ELECT 47uF 20% 50V	
C153	1-164-004-11	CERAMIC CHIP 0.1uF 10% 25V	
C154	1-164-004-11	CERAMIC CHIP 0.1uF 10% 25V	
C155	1-164-346-11	CERAMIC CHIP 1uF 16V	
C156	1-164-004-11	CERAMIC CHIP 0.1uF 10% 25V	
C157	1-164-346-11	CERAMIC CHIP 1uF 16V	
C158	1-164-004-11	CERAMIC CHIP 0.1uF 10% 25V	
C159	1-163-021-91	CERAMIC CHIP 0.01uF 10% 50V	
C160	1-164-004-11	CERAMIC CHIP 0.1uF 10% 25V	
C161	1-164-346-11	CERAMIC CHIP 1uF 16V	
C162	1-164-004-11	CERAMIC CHIP 0.1uF 10% 25V	
C163	1-164-346-11	CERAMIC CHIP 1uF 16V	
C164	1-164-004-11	CERAMIC CHIP 0.1uF 10% 25V	
C165	1-163-021-91	CERAMIC CHIP 0.01uF 10% 50V	
C166	1-164-004-11	CERAMIC CHIP 0.1uF 10% 25V	
C169	1-164-346-11	CERAMIC CHIP 1uF 16V	
C170	1-163-109-00	CERAMIC CHIP 47PF 5% 50V	
C171	1-163-227-11	CERAMIC CHIP 10PF 5% 50V	
C172	1-163-109-00	CERAMIC CHIP 47PF 5% 50V	
C173	1-163-021-91	CERAMIC CHIP 0.01uF 10% 50V	
C174	1-163-021-91	CERAMIC CHIP 0.01uF 10% 50V	
C175	1-163-141-00	CERAMIC CHIP 0.001uF 5% 50V	
C176	1-163-141-00	CERAMIC CHIP 0.001uF 5% 50V	
C177	1-163-222-91	CERAMIC CHIP 5PF 0.25PF 50V	

SONY-04779 / Druck 12

PANEL DSP

Ref. No.	Part No.	Description				Remarks
C178	1-163-222-91	CERAMIC CHIP	5PF	0.25PF	50V	
C179	1-163-021-91	CERAMIC CHIP	0.01uF	10%	50V	
C180	1-163-021-91	CERAMIC CHIP	0.01uF	10%	50V	
C183	1-163-227-11	CERAMIC CHIP	10PF	5%	50V	
C184	1-163-227-11	CERAMIC CHIP	10PF	5%	50V	
C185	1-163-021-91	CERAMIC CHIP	0.01uF	10%	50V	
C186	1-163-021-91	CERAMIC CHIP	0.01uF	10%	50V	
C188	1-163-021-91	CERAMIC CHIP	0.01uF	10%	50V	
C189	1-124-589-11	ELECT	47uF	20%	16V	
C190	1-164-346-11	CERAMIC CHIP	1uF		16V	
C192	1-164-505-11	CERAMIC CHIP	2.2uF		16V	
C193	1-163-021-91	CERAMIC CHIP	0.01uF	10%	50V	
C195	1-163-021-91	CERAMIC CHIP	0.01uF	10%	50V	
C196	1-124-589-11	ELECT	47uF	20%	16V	
C197	1-124-910-11	ELECT	47uF	20%	50V	
C198	1-124-910-11	ELECT	47uF	20%	50V	
C199	1-163-129-00	CERAMIC CHIP	330PF	5%	50V	
C201	1-163-109-00	CERAMIC CHIP	47PF	5%	50V	
C202	1-163-109-00	CERAMIC CHIP	47PF	5%	50V	
C225	1-124-915-11	ELECT	10uF	20%	63V	
C226	1-130-475-00	MYLAR	0.0022uF	5%	50V	
C227	1-163-117-00	CERAMIC CHIP	100PF	5%	50V	
C228	1-124-915-11	ELECT	10uF	20%	63V	
C229	1-164-004-11	CERAMIC CHIP	0.1uF	10%	25V	
C230	1-124-915-11	ELECT	10uF	20%	63V	
C231	1-164-004-11	CERAMIC CHIP	0.1uF	10%	25V	
C232	1-124-915-11	ELECT	10uF	20%	63V	
C233	1-164-004-11	CERAMIC CHIP	0.1uF	10%	25V	
C234	1-124-910-11	ELECT	47uF	20%	50V	
C238	1-163-021-91	CERAMIC CHIP	0.01uF	10%	50V	
C239	1-163-117-00	CERAMIC CHIP	100PF	5%	50V	
C240	1-164-004-11	CERAMIC CHIP	0.1uF	10%	25V	
C241	1-164-004-11	CERAMIC CHIP	0.1uF	10%	25V	
C242	1-163-021-91	CERAMIC CHIP	0.01uF	10%	50V	
C243	1-164-004-11	CERAMIC CHIP	0.1uF	10%	25V	
C244	1-164-004-11	CERAMIC CHIP	0.1uF	10%	25V	
C245	1-164-004-11	CERAMIC CHIP	0.1uF	10%	25V	
C246	1-164-004-11	CERAMIC CHIP	0.1uF	10%	25V	
C247	1-164-004-11	CERAMIC CHIP	0.1uF	10%	25V	
C248	1-164-004-11	CERAMIC CHIP	0.1uF	10%	25V	
C249	1-164-346-11	CERAMIC CHIP	1uF		16V	
C250	1-164-346-11	CERAMIC CHIP	1uF		16V	
C253	1-164-346-11	CERAMIC CHIP	1uF		16V	
C254	1-164-346-11	CERAMIC CHIP	1uF		16V	
C255	1-164-346-11	CERAMIC CHIP	1uF		16V	

Ref. No.	Part No.	Description				Remarks
C256	1-164-346-11	CERAMIC CHIP	1uF		16V	
C257	1-164-346-11	CERAMIC CHIP	1uF		16V	
C258	1-164-346-11	CERAMIC CHIP	1uF		16V	
C259	1-164-346-11	CERAMIC CHIP	1uF		16V	
C260	1-164-346-11	CERAMIC CHIP	1uF		16V	
C261	1-164-346-11	CERAMIC CHIP	1uF		16V	
C262	1-164-346-11	CERAMIC CHIP	1uF		16V	
C263	1-164-346-11	CERAMIC CHIP	1uF		16V	
C264	1-164-346-11	CERAMIC CHIP	1uF		16V	
C269	1-164-004-11	CERAMIC CHIP	0.1uF	10%	25V	
C270	1-164-004-11	CERAMIC CHIP	0.1uF	10%	25V	
C271	1-164-004-11	CERAMIC CHIP	0.1uF	10%	25V	
C272	1-124-589-11	ELECT	47uF	20%	16V	
C273	1-163-129-00	CERAMIC CHIP	330PF	5%	50V	
C274	1-163-129-00	CERAMIC CHIP	330PF	5%	50V	
C275	1-163-141-00	CERAMIC CHIP	0.001uF	5%	50V	
C276	1-163-141-00	CERAMIC CHIP	0.001uF	5%	50V	
C279	1-126-163-11	ELECT	4.7uF	20%	50V	
C280	1-164-004-11	CERAMIC CHIP	0.1uF	10%	25V	
C282	1-163-021-91	CERAMIC CHIP	0.01uF	10%	50V	
C283	1-164-004-11	CERAMIC CHIP	0.1uF	10%	25V	
C331	1-163-123-00	CERAMIC CHIP	180PF	5%	50V	
C332	1-163-123-00	CERAMIC CHIP	180PF	5%	50V	
C333	1-163-131-00	CERAMIC CHIP	390PF	5%	50V	
C334	1-163-123-00	CERAMIC CHIP	180PF	5%	50V	
C335	1-163-123-00	CERAMIC CHIP	180PF	5%	50V	
C336	1-163-131-00	CERAMIC CHIP	390PF	5%	50V	
C337	1-124-229-00	ELECT	33uF	20%	10V	
C338	1-164-004-11	CERAMIC CHIP	0.1uF	10%	25V	
C339	1-124-229-00	ELECT	33uF	20%	10V	
C340	1-164-004-11	CERAMIC CHIP	0.1uF	10%	25V	
C341	1-124-229-00	ELECT	33uF	20%	10V	
C342	1-163-021-91	CERAMIC CHIP	0.01uF	10%	50V	
C343	1-124-229-00	ELECT	33uF	20%	10V	
C344	1-164-004-11	CERAMIC CHIP	0.1uF	10%	25V	
C345	1-124-229-00	ELECT	33uF	20%	10V	
C346	1-164-004-11	CERAMIC CHIP	0.1uF	10%	25V	
C347	1-163-101-00	CERAMIC CHIP	22PF	5%	50V	
C348	1-163-101-00	CERAMIC CHIP	22PF	5%	50V	
C349	1-126-157-11	ELECT	10uF	20%	16V	
C350	1-163-222-91	CERAMIC CHIP	5PF	0.25PF	50V	
C351	1-124-229-00	ELECT	33uF	20%	10V	
C352	1-164-004-11	CERAMIC CHIP	0.1uF	10%	25V	
C353	1-124-229-00	ELECT	33uF	20%	10V	
C355	1-164-004-11	CERAMIC CHIP	0.1uF	10%	25V	

PANEL DSP

Ref. No.	Part No.	Description				Remarks
C356	1-163-141-00	CERAMIC CHIP	0.001uF	5%	50V	
C357	1-163-021-91	CERAMIC CHIP	0.01uF	10%	50V	
C358	1-163-021-91	CERAMIC CHIP	0.01uF	10%	50V	
C362	1-164-004-11	CERAMIC CHIP	0.1uF	10%	25V	
C363	1-164-004-11	CERAMIC CHIP	0.1uF	10%	25V	
C391	1-163-117-00	CERAMIC CHIP	100PF	5%	50V	
C392	1-136-153-00	FILM	0.01uF	5%	50V	
C393	1-164-004-11	CERAMIC CHIP	0.1uF	10%	25V	
C501	1-124-667-11	ELECT	10uF	20%	100V	
C502	1-124-667-11	ELECT	10uF	20%	100V	
C505	1-164-004-11	CERAMIC CHIP	0.1uF	10%	25V	
C507	1-124-261-00	ELECT	10uF	20%	50V	
C508	1-124-589-11	ELECT	47uF	20%	16V	
C509	1-126-163-11	ELECT	4.7uF	20%	50V	
C510	1-126-301-11	ELECT	1uF	20%	50V	
C511	1-126-163-11	ELECT	4.7uF	20%	50V	
C513	1-163-124-00	CERAMIC CHIP	200PF	5%	50V	
C521	1-124-589-11	ELECT	47uF	20%	16V	
C522	1-124-589-11	ELECT	47uF	20%	16V	
C523	1-163-104-00	CERAMIC CHIP	30PF	5%	50V	
C524	1-163-104-00	CERAMIC CHIP	30PF	5%	50V	
C525	1-126-176-11	ELECT	220uF	20%	10V	
C526	1-124-261-00	ELECT	10uF	20%	50V	
C527	1-164-004-11	CERAMIC CHIP	0.1uF	10%	25V	
C528	1-164-004-11	CERAMIC CHIP	0.1uF	10%	25V	
C529	1-124-234-00	ELECT	22uF	20%	16V	
C530	1-163-141-00	CERAMIC CHIP	0.001uF	5%	50V	
C531	1-163-141-00	CERAMIC CHIP	0.001uF	5%	50V	

< CONNECTOR >

CN501	*	1-568-318-11	PLUG, CONNECTOR 6P
CN502	*	1-568-320-11	PLUG, CONNECTOR 8P
CN503		1-561-115-00	SOCKET, CONNECTOR 6P
CN504	*	1-568-320-11	PLUG, CONNECTOR 8P
CNJ102		1-568-319-11	SOCKET, CONNECTOR 8P
CNP101	*	1-566-154-11	CONNECTOR, BOARD TO BOARD 20P
CNP103		1-573-146-11	PLUG, CONNECTOR 8P
CNP104	*	1-564-509-11	PLUG, CONNECTOR 6P

< DIODE >

D100	8-719-800-76	DIODE	1SS226
D101	8-719-800-76	DIODE	1SS226
D102	8-719-990-39	DIODE	DCB010
D103	8-719-800-76	DIODE	1SS226
D104	8-719-800-76	DIODE	1SS226
D105	8-719-800-76	DIODE	1SS226
D106	8-719-002-81	DIODE	1T363
D107	8-719-002-81	DIODE	1T363
D108	8-719-002-81	DIODE	1T363
D109	8-719-002-81	DIODE	1T363
D110	8-719-990-39	DIODE	DCB010
D332	8-719-800-76	DIODE	1SS226
D333	8-719-210-39	DIODE	EC10QS-04
D334	8-719-106-08	DIODE	RD6.2M-B2
D501	8-719-977-03	DIODE	DTZ5.6B
D502	8-719-990-39	DIODE	DCB010
D503	8-719-990-39	DIODE	DCB010
D504	8-719-301-39	LED	SEL2210S-D
D505	8-719-301-39	LED	SEL2210S-D
D506	8-719-301-39	LED	SEL2210S-D
D507	8-719-301-39	LED	SEL2210S-D
D508	8-719-301-39	LED	SEL2210S-D
D509	8-719-301-39	LED	SEL2210S-D
D510	8-719-301-39	LED	SEL2210S-D
D511	8-719-301-39	LED	SEL2210S-D
D512	8-719-301-39	LED	SEL2210S-D
D514	8-719-301-44	LED	SEL2410E-D
D515	8-719-301-44	LED	SEL2410E-D
D521	8-719-977-04	DIODE	DTZ5.6C
D522	8-719-977-04	DIODE	DTZ5.6C
D523	8-719-990-39	DIODE	DCB010

< INDICATOR TUBE >

FL501	1-519-654-11	INDICATOR TUBE, FLUORESCENT	

< IC >

IC101	8-759-635-26	IC	M5283P
IC102	8-759-504-36	IC	AK5339-KP
IC103	8-759-805-14	IC	LC7822
IC106	8-759-511-68	IC	CXD8245M
IC108	8-752-339-86	IC	CXD2557M
IC109	8-759-041-72	IC	M37450M8-464FP
IC110	8-759-973-04	IC	MSM41464-10RS-K
IC111	8-752-341-99	IC	CXD2701Q
IC112	8-752-332-80	IC	CXD1160AQ
IC113	8-759-636-55	IC	M5218AFP

PANEL DSP

Ref. No.	Part No.	Description	Remarks
IC114	8-759-636-55	IC M5218AFP	
IC115	8-759-636-55	IC M5218AFP	
IC116	8-759-636-55	IC M5218AFP	
IC117	8-759-636-55	IC M5218AFP	
IC118	8-759-636-55	IC M5218AFP	
IC119	8-759-636-55	IC M5218AFP	
IC120	8-759-636-55	IC M5218AFP	
IC121	8-759-908-17	IC TL082CPS	
IC122	8-759-982-44	IC RC79L05A	
IC123	8-759-512-96	IC CXD2905Q	
IC124	8-759-517-14	IC MB625473PF-G	
IC331	8-752-344-10	IC CXD2561M-1	
IC332	8-752-342-65	IC CXD2560M	
IC333	8-759-234-20	IC TC7S08F	
IC391	8-759-927-29	IC SN74HCU04ANS	
IC392	8-759-250-81	IC TC5081AP	
IC501	8-759-512-46	IC MSC7162	
IC502	8-759-512-45	IC SN755731	
IC503	8-759-512-45	IC SN755731	
IC504	8-759-512-46	IC MSC7162	
IC505	8-759-512-47	IC SN755721	
IC506	8-759-246-46	IC TMP91C640F-2302	
IC507	8-759-605-16	IC M51953BL	
IC508	8-759-039-78	IC MC68HC11E9SC400366FU	
IC509	8-759-512-48	IC XR-1092	
		< COIL >	
L100	1-410-397-21	FERRITE BEAD INDUCTOR (1.1uH)	
L102	1-406-416-11	COIL (OSC) (0.6uH)	
L260	1-412-390-21	INDUCTOR, CHIP 0uH	
L262	1-412-390-21	INDUCTOR, CHIP 0uH	
L331	1-410-381-11	INDUCTOR CHIP 10uH	
L332	1-543-610-11	BEAD, FERRITE	
L333	1-412-390-21	INDUCTOR, CHIP 0uH	
L334	1-412-390-21	INDUCTOR, CHIP 0uH	
		< TRANSISTOR >	
Q100	8-729-107-46	TRANSISTOR 2SC3624A-L15	
Q101	8-729-107-46	TRANSISTOR 2SC3624A-L15	
Q102	8-729-107-46	TRANSISTOR 2SC3624A-L15	
Q103	8-729-107-46	TRANSISTOR 2SC3624A-L15	
Q104	8-729-107-46	TRANSISTOR 2SC3624A-L15	

Ref. No.	Part No.	Description	Remarks
Q105	8-729-107-46	TRANSISTOR 2SC3624A-L15	
Q106	8-729-805-65	TRANSISTOR 2SA1344	
Q107	8-729-805-65	TRANSISTOR 2SA1344	
Q108	8-729-805-65	TRANSISTOR 2SA1344	
Q109	8-729-602-21	TRANSISTOR 2SC4154-F	
Q110	8-729-805-65	TRANSISTOR 2SA1344	
Q111	8-729-805-65	TRANSISTOR 2SA1344	
Q112	8-729-107-46	TRANSISTOR 2SC3624A-L15	
Q113	8-729-107-46	TRANSISTOR 2SC3624A-L15	
Q114	8-729-107-46	TRANSISTOR 2SC3624A-L15	
Q115	8-729-805-41	TRANSISTOR 2SC3398	
Q116	8-729-602-21	TRANSISTOR 2SC4154-F	
Q117	8-729-602-21	TRANSISTOR 2SC4154-F	
Q118	8-729-805-41	TRANSISTOR 2SC3398	
Q120	8-729-107-46	TRANSISTOR 2SC3624A-L15	
Q121	8-729-107-46	TRANSISTOR 2SC3624A-L15	
Q122	8-729-602-21	TRANSISTOR 2SC4154-F	
Q123	8-729-805-65	TRANSISTOR 2SA1344	
Q124	8-729-107-46	TRANSISTOR 2SC3624A-L15	
Q125	8-729-602-36	TRANSISTOR 2SA1602-F	
Q126	8-729-805-65	TRANSISTOR 2SA1344	
Q127	8-729-805-41	TRANSISTOR 2SC3398	
Q128	8-729-107-46	TRANSISTOR 2SC3624A-L15	
Q129	8-729-107-46	TRANSISTOR 2SC3624A-L15	
Q130	8-729-805-65	TRANSISTOR 2SA1344	
Q331	8-729-805-41	TRANSISTOR 2SC3398	
Q332	8-729-805-65	TRANSISTOR 2SA1344	
Q333	8-729-205-97	TRANSISTOR 2SC3668-Y	
Q501	8-729-602-36	TRANSISTOR 2SA1602-F	
Q502	8-729-602-21	TRANSISTOR 2SC4154-F	
Q503	8-729-805-65	TRANSISTOR 2SA1344	
Q504	8-729-805-65	TRANSISTOR 2SA1344	
Q505	8-729-602-36	TRANSISTOR 2SA1602-F	
Q506	8-729-805-41	TRANSISTOR 2SC3398	
Q507	8-729-602-21	TRANSISTOR 2SC4154-F	
Q508	8-729-602-21	TRANSISTOR 2SC4154-F	
Q509	8-729-602-21	TRANSISTOR 2SC4154-F	
Q510	8-729-602-21	TRANSISTOR 2SC4154-F	
Q511	8-729-602-21	TRANSISTOR 2SC4154-F	
Q512	8-729-602-21	TRANSISTOR 2SC4154-F	
Q513	8-729-602-21	TRANSISTOR 2SC4154-F	
Q514	8-729-602-21	TRANSISTOR 2SC4154-F	
Q515	8-729-602-21	TRANSISTOR 2SC4154-F	
Q516	8-729-602-21	TRANSISTOR 2SC4154-F	
Q517	8-729-602-21	TRANSISTOR 2SC4154-F	

PANEL DSP

Ref. No.	Part No.	Description	Remarks
		< RESISTOR >	
R103	1-216-025-00	METAL CHIP 100 5% 1/10W	
R104	1-216-025-00	METAL CHIP 100 5% 1/10W	
R108	1-216-025-00	METAL CHIP 100 5% 1/10W	
R109	1-216-025-00	METAL CHIP 100 5% 1/10W	
R110	1-216-041-00	METAL CHIP 470 5% 1/10W	
R111	1-216-041-00	METAL CHIP 470 5% 1/10W	
R112	1-216-041-00	METAL CHIP 470 5% 1/10W	
R113	1-216-041-00	METAL CHIP 470 5% 1/10W	
R115	1-216-041-00	METAL CHIP 470 5% 1/10W	
R116	1-216-041-00	METAL CHIP 470 5% 1/10W	
R117	1-216-041-00	METAL CHIP 470 5% 1/10W	
R118	1-216-041-00	METAL CHIP 470 5% 1/10W	
R126	1-216-071-00	METAL CHIP 8.2K 5% 1/10W	
R127	1-216-049-00	METAL CHIP 1K 5% 1/10W	
R128	1-216-067-00	METAL CHIP 5.6K 5% 1/10W	
R129	1-216-065-00	METAL CHIP 4.7K 5% 1/10W	
R130	1-216-113-00	METAL CHIP 470K 5% 1/10W	
R131	1-216-053-00	METAL CHIP 1.5K 5% 1/10W	
R132	1-216-061-00	METAL CHIP 3.3K 5% 1/10W	
R133	1-216-113-00	METAL CHIP 470K 5% 1/10W	
R134	1-216-043-00	METAL CHIP 560 5% 1/10W	
R135	1-216-057-00	METAL CHIP 2.2K 5% 1/10W	
R136	1-216-113-00	METAL CHIP 470K 5% 1/10W	
R137	1-216-061-00	METAL CHIP 3.3K 5% 1/10W	
R138	1-216-065-00	METAL CHIP 4.7K 5% 1/10W	
R139	1-216-065-00	METAL CHIP 4.7K 5% 1/10W	
R140	1-216-065-00	METAL CHIP 4.7K 5% 1/10W	
R141	1-216-097-00	METAL CHIP 100K 5% 1/10W	
R142	1-216-097-00	METAL CHIP 100K 5% 1/10W	
R143	1-216-097-00	METAL CHIP 100K 5% 1/10W	
R146	1-216-073-00	METAL CHIP 10K 5% 1/10W	
R147	1-216-065-00	METAL CHIP 4.7K 5% 1/10W	
R148	1-216-073-00	METAL CHIP 10K 5% 1/10W	
R149	1-216-097-00	METAL CHIP 100K 5% 1/10W	
R150	1-216-097-00	METAL CHIP 100K 5% 1/10W	
R151	1-216-065-00	METAL CHIP 4.7K 5% 1/10W	
R152	1-216-089-00	METAL CHIP 47K 5% 1/10W	
R153	1-216-065-00	METAL CHIP 4.7K 5% 1/10W	
R154	1-216-089-00	METAL CHIP 47K 5% 1/10W	
R155	1-216-049-00	METAL CHIP 1K 5% 1/10W	

Ref. No.	Part No.	Description	Remarks
R156	1-216-081-00	METAL CHIP 22K 5% 1/10W	
R157	1-216-103-00	METAL CHIP 180K 5% 1/10W	
R158	1-216-081-00	METAL CHIP 22K 5% 1/10W	
R159	1-216-073-00	METAL CHIP 10K 5% 1/10W	
R160	1-216-049-00	METAL CHIP 1K 5% 1/10W	
R161	1-216-059-00	METAL CHIP 2.7K 5% 1/10W	
R162	1-216-094-00	METAL GLAZE 75K 5% 1/10W	
R163	1-216-049-00	METAL CHIP 1K 5% 1/10W	
R164	1-216-081-00	METAL CHIP 22K 5% 1/10W	
R165	1-216-103-00	METAL CHIP 180K 5% 1/10W	
R166	1-216-081-00	METAL CHIP 22K 5% 1/10W	
R167	1-216-073-00	METAL CHIP 10K 5% 1/10W	
R168	1-216-049-00	METAL CHIP 1K 5% 1/10W	
R169	1-216-059-00	METAL CHIP 2.7K 5% 1/10W	
R170	1-216-094-00	METAL GLAZE 75K 5% 1/10W	
R171	1-216-089-00	METAL CHIP 47K 5% 1/10W	
R172	1-216-089-00	METAL CHIP 47K 5% 1/10W	
R173	1-216-089-00	METAL CHIP 47K 5% 1/10W	
R174	1-216-071-00	METAL CHIP 8.2K 5% 1/10W	
R175	1-216-089-00	METAL CHIP 47K 5% 1/10W	
R176	1-216-041-00	METAL CHIP 470 5% 1/10W	
R177	1-216-097-00	METAL CHIP 100K 5% 1/10W	
R178	1-216-025-00	METAL CHIP 100 5% 1/10W	
R179	1-216-073-00	METAL CHIP 10K 5% 1/10W	
R180	1-216-033-00	METAL CHIP 220 5% 1/10W	
R181	1-216-033-00	METAL CHIP 220 5% 1/10W	
R182	1-216-073-00	METAL CHIP 10K 5% 1/10W	
R183	1-216-079-00	METAL CHIP 18K 5% 1/10W	
R184	1-216-051-00	METAL CHIP 1.2K 5% 1/10W	
R185	1-216-061-00	METAL CHIP 3.3K 5% 1/10W	
R186	1-216-071-00	METAL CHIP 8.2K 5% 1/10W	
R187	1-216-083-00	METAL CHIP 27K 5% 1/10W	
R188	1-216-117-00	METAL CHIP 680K 5% 1/10W	
R189	1-216-093-00	METAL CHIP 68K 5% 1/10W	
R190	1-216-103-00	METAL CHIP 180K 5% 1/10W	
R191	1-216-119-00	METAL CHIP 820K 5% 1/10W	
R192	1-216-097-00	METAL CHIP 100K 5% 1/10W	
R193	1-216-097-00	METAL CHIP 100K 5% 1/10W	
R194	1-216-081-00	METAL CHIP 22K 5% 1/10W	
R195	1-216-089-00	METAL CHIP 47K 5% 1/10W	
R196	1-216-082-00	METAL GLAZE 24K 5% 1/10W	
R197	1-216-073-00	METAL CHIP 10K 5% 1/10W	
R198	1-216-073-00	METAL CHIP 10K 5% 1/10W	
R199	1-216-079-00	METAL CHIP 18K 5% 1/10W	
R200	1-216-051-00	METAL CHIP 1.2K 5% 1/10W	

SONY-04779 / Druck 13

PANEL DSP

Ref. No.	Part No.	Description				Remarks
R201	1-216-061-00	METAL CHIP	3.3K	5%	1/10W	
R202	1-216-071-00	METAL CHIP	8.2K	5%	1/10W	
R203	1-216-083-00	METAL CHIP	27K	5%	1/10W	
R204	1-216-117-00	METAL CHIP	680K	5%	1/10W	
R205	1-216-093-00	METAL CHIP	68K	5%	1/10W	
R206	1-216-103-00	METAL CHIP	180K	5%	1/10W	
R207	1-216-119-00	METAL CHIP	820K	5%	1/10W	
R208	1-216-097-00	METAL CHIP	100K	5%	1/10W	
R209	1-216-097-00	METAL CHIP	100K	5%	1/10W	
R210	1-216-081-00	METAL CHIP	22K	5%	1/10W	
R211	1-216-089-00	METAL CHIP	47K	5%	1/10W	
R212	1-216-082-00	METAL GLAZE	24K	5%	1/10W	
R213	1-216-049-00	METAL CHIP	1K	5%	1/10W	
R214	1-216-049-00	METAL CHIP	1K	5%	1/10W	
R215	1-216-049-00	METAL CHIP	1K	5%	1/10W	
R216	1-216-033-00	METAL CHIP	220	5%	1/10W	
R217	1-216-033-00	METAL CHIP	220	5%	1/10W	
R218	1-216-089-00	METAL CHIP	47K	5%	1/10W	
R226	1-216-071-00	METAL CHIP	8.2K	5%	1/10W	
R227	1-216-049-00	METAL CHIP	1K	5%	1/10W	
R228	1-216-067-00	METAL CHIP	5.6K	5%	1/10W	
R229	1-216-065-00	METAL CHIP	4.7K	5%	1/10W	
R230	1-216-113-00	METAL CHIP	470K	5%	1/10W	
R231	1-216-053-00	METAL CHIP	1.5K	5%	1/10W	
R232	1-216-061-00	METAL CHIP	3.3K	5%	1/10W	
R233	1-216-113-00	METAL CHIP	470K	5%	1/10W	
R234	1-216-043-00	METAL CHIP	560	5%	1/10W	
R235	1-216-057-00	METAL CHIP	2.2K	5%	1/10W	
R236	1-216-113-00	METAL CHIP	470K	5%	1/10W	
R237	1-216-061-00	METAL CHIP	3.3K	5%	1/10W	
R238	1-216-065-00	METAL CHIP	4.7K	5%	1/10W	
R239	1-216-065-00	METAL CHIP	4.7K	5%	1/10W	
R240	1-216-065-00	METAL CHIP	4.7K	5%	1/10W	
R241	1-216-073-00	METAL CHIP	10K	5%	1/10W	
R242	1-216-097-00	METAL CHIP	100K	5%	1/10W	
R243	1-216-097-00	METAL CHIP	100K	5%	1/10W	
R250	1-216-037-00	METAL CHIP	330	5%	1/10W	
R251	1-216-065-00	METAL CHIP	4.7K	5%	1/10W	
R252	1-216-057-00	METAL CHIP	2.2K	5%	1/10W	
R253	1-216-077-00	METAL CHIP	15K	5%	1/10W	
R254	1-216-073-00	METAL CHIP	10K	5%	1/10W	
R255	1-216-097-00	METAL CHIP	100K	5%	1/10W	
R256	1-216-025-00	METAL CHIP	100	5%	1/10W	
R257	1-216-025-00	METAL CHIP	100	5%	1/10W	
R258	1-216-041-00	METAL CHIP	470	5%	1/10W	

Ref. No.	Part No.	Description				Remarks
R259	1-216-041-00	METAL CHIP	470	5%	1/10W	
R261	1-216-017-00	METAL CHIP	47	5%	1/10W	
R263	1-216-073-00	METAL CHIP	10K	5%	1/10W	
R264	1-216-089-00	METAL CHIP	47K	5%	1/10W	
R265	1-216-089-00	METAL CHIP	47K	5%	1/10W	
R266	1-216-121-00	METAL CHIP	1M	5%	1/10W	
R267	1-216-081-00	METAL CHIP	22K	5%	1/10W	
R268	1-216-025-00	METAL CHIP	100	5%	1/10W	
R269	1-216-025-00	METAL CHIP	100	5%	1/10W	
R272	1-216-113-00	METAL CHIP	470K	5%	1/10W	
R274	1-216-041-00	METAL CHIP	470	5%	1/10W	
R275	1-216-025-00	METAL CHIP	100	5%	1/10W	
R276	1-216-025-00	METAL CHIP	100	5%	1/10W	
R277	1-216-049-00	METAL CHIP	1K	5%	1/10W	
R279	1-216-076-00	METAL GLAZE	13K	5%	1/10W	
R280	1-216-025-00	METAL CHIP	100	5%	1/10W	
R281	1-216-025-00	METAL CHIP	100	5%	1/10W	
R282	1-216-025-00	METAL CHIP	100	5%	1/10W	
R283	1-216-025-00	METAL CHIP	100	5%	1/10W	
R284	1-216-033-00	METAL CHIP	220	5%	1/10W	
R285	1-216-025-00	METAL CHIP	100	5%	1/10W	
R286	1-216-001-00	METAL CHIP	10	5%	1/10W	
R287	1-216-089-00	METAL CHIP	47K	5%	1/10W	
R288	1-216-089-00	METAL CHIP	47K	5%	1/10W	
R289	1-216-033-00	METAL CHIP	220	5%	1/10W	
R290	1-216-033-00	METAL CHIP	220	5%	1/10W	
R291	1-216-073-00	METAL CHIP	10K	5%	1/10W	
R292	1-216-076-00	METAL GLAZE	13K	5%	1/10W	
R293	1-216-073-00	METAL CHIP	10K	5%	1/10W	
R294	1-216-025-00	METAL CHIP	100	5%	1/10W	
R295	1-216-121-00	METAL CHIP	1M	5%	1/10W	
R296	1-216-121-00	METAL CHIP	1M	5%	1/10W	
R297	1-216-097-00	METAL CHIP	100K	5%	1/10W	
R298	1-216-097-00	METAL CHIP	100K	5%	1/10W	
R299	1-216-073-00	METAL CHIP	10K	5%	1/10W	
R300	1-216-073-00	METAL CHIP	10K	5%	1/10W	
R301	1-216-025-00	METAL CHIP	100	5%	1/10W	
R302	1-216-025-00	METAL CHIP	100	5%	1/10W	
R303	1-216-081-00	METAL CHIP	22K	5%	1/10W	
R306	1-216-097-00	METAL CHIP	100K	5%	1/10W	
R307	1-216-017-00	METAL CHIP	47	5%	1/10W	
R308	1-216-041-00	METAL CHIP	470	5%	1/10W	
R309	1-216-073-00	METAL CHIP	10K	5%	1/10W	
R310	1-216-073-00	METAL CHIP	10K	5%	1/10W	
R311	1-216-073-00	METAL CHIP	10K	5%	1/10W	

PANEL DSP

Ref. No.	Part No.	Description				Remarks
R312	1-216-073-00	METAL CHIP	10K	5%	1/10W	
R313	1-216-073-00	METAL CHIP	10K	5%	1/10W	
R314	1-216-073-00	METAL CHIP	10K	5%	1/10W	
R315	1-216-033-00	METAL CHIP	220	5%	1/10W	
R316	1-216-033-00	METAL CHIP	220	5%	1/10W	
R317	1-216-025-00	METAL CHIP	100	5%	1/10W	
R318	1-216-295-00	METAL CHIP	0	5%	1/10W	
R319	1-216-113-00	METAL CHIP	470K	5%	1/10W	
R320	1-216-065-00	METAL CHIP	4.7K	5%	1/10W	
R321	1-216-121-00	METAL CHIP	1M	5%	1/10W	
R322	1-216-089-00	METAL CHIP	47K	5%	1/10W	
R323	1-216-295-00	METAL CHIP	0	5%	1/10W	
R331	1-216-075-00	METAL CHIP	12K	5%	1/10W	
R332	1-216-075-00	METAL CHIP	12K	5%	1/10W	
R333	1-216-061-00	METAL CHIP	3.3K	5%	1/10W	
R334	1-216-061-00	METAL CHIP	3.3K	5%	1/10W	
R335	1-216-075-00	METAL CHIP	12K	5%	1/10W	
R336	1-216-075-00	METAL CHIP	12K	5%	1/10W	
R337	1-216-061-00	METAL CHIP	3.3K	5%	1/10W	
R338	1-216-061-00	METAL CHIP	3.3K	5%	1/10W	
R339	1-216-071-00	METAL CHIP	8.2K	5%	1/10W	
R340	1-216-071-00	METAL CHIP	8.2K	5%	1/10W	
R341	1-216-071-00	METAL CHIP	8.2K	5%	1/10W	
R342	1-216-071-00	METAL CHIP	8.2K	5%	1/10W	
R343	1-216-071-00	METAL CHIP	8.2K	5%	1/10W	
R344	1-216-071-00	METAL CHIP	8.2K	5%	1/10W	
R345	1-216-071-00	METAL CHIP	8.2K	5%	1/10W	
R346	1-216-071-00	METAL CHIP	8.2K	5%	1/10W	
R347	1-216-065-00	METAL CHIP	4.7K	5%	1/10W	
R348	1-216-088-00	METAL CHIP	43K	5%	1/10W	
R349	1-216-129-00	METAL CHIP	2.2M	5%	1/10W	
R350	1-216-081-00	METAL CHIP	22K	5%	1/10W	
R351	1-216-088-00	METAL CHIP	43K	5%	1/10W	
R352	1-216-088-00	METAL CHIP	43K	5%	1/10W	
R353	1-216-088-00	METAL CHIP	43K	5%	1/10W	
R354	1-216-081-00	METAL CHIP	22K	5%	1/10W	
R355	1-216-033-00	METAL CHIP	220	5%	1/10W	
R356	1-216-033-00	METAL CHIP	220	5%	1/10W	
R357	1-216-033-00	METAL CHIP	220	5%	1/10W	
R358	1-216-057-00	METAL CHIP	2.2K	5%	1/10W	
R359	1-216-129-00	METAL CHIP	2.2M	5%	1/10W	
R360	1-216-001-00	METAL CHIP	10	5%	1/10W	
R361	1-216-033-00	METAL CHIP	220	5%	1/10W	
R364	1-216-033-00	METAL CHIP	220	5%	1/10W	
R391	1-216-044-00	METAL CHIP	620	5%	1/10W	

Ref. No.	Part No.	Description				Remarks
R392	1-216-065-00	METAL CHIP	4.7K	5%	1/10W	
R393	1-216-065-00	METAL CHIP	4.7K	5%	1/10W	
R501	1-216-121-00	METAL CHIP	1M	5%	1/10W	
R502	1-216-071-00	METAL CHIP	8.2K	5%	1/10W	
R503	1-216-055-00	METAL CHIP	1.8K	5%	1/10W	
R504	1-216-073-00	METAL CHIP	10K	5%	1/10W	
R505	1-216-081-00	METAL CHIP	22K	5%	1/10W	
R506	1-216-081-00	METAL CHIP	22K	5%	1/10W	
R507	1-216-073-00	METAL CHIP	10K	5%	1/10W	
R508	1-216-081-00	METAL CHIP	22K	5%	1/10W	
R511	1-216-081-00	METAL CHIP	22K	5%	1/10W	
R514	1-216-081-00	METAL CHIP	22K	5%	1/10W	
R516	1-216-073-00	METAL CHIP	10K	5%	1/10W	
R518	1-216-073-00	METAL CHIP	10K	5%	1/10W	
R519	1-216-073-00	METAL CHIP	10K	5%	1/10W	
R520	1-216-085-00	METAL CHIP	33K	5%	1/10W	
R521	1-216-025-00	METAL CHIP	100	5%	1/10W	
R522	1-216-025-00	METAL CHIP	100	5%	1/10W	
R523	1-216-121-00	METAL CHIP	1M	5%	1/10W	
R524	1-216-025-00	METAL CHIP	100	5%	1/10W	
R525	1-216-025-00	METAL CHIP	100	5%	1/10W	
R526	1-216-025-00	METAL CHIP	100	5%	1/10W	
R527	1-216-025-00	METAL CHIP	100	5%	1/10W	
R528	1-216-025-00	METAL CHIP	100	5%	1/10W	
R529	1-216-025-00	METAL CHIP	100	5%	1/10W	
R530	1-216-025-00	METAL CHIP	100	5%	1/10W	
R531	1-216-025-00	METAL CHIP	100	5%	1/10W	
R532	1-216-025-00	METAL CHIP	100	5%	1/10W	
R534	1-216-073-00	METAL CHIP	10K	5%	1/10W	
R535	1-216-025-00	METAL CHIP	100	5%	1/10W	
R536	1-216-025-00	METAL CHIP	100	5%	1/10W	
R537	1-216-025-00	METAL CHIP	100	5%	1/10W	
R538	1-216-025-00	METAL CHIP	100	5%	1/10W	
R539	1-216-025-00	METAL CHIP	100	5%	1/10W	
R540	1-216-053-00	METAL CHIP	1.5K	5%	1/10W	
R541	1-216-053-00	METAL CHIP	1.5K	5%	1/10W	
R542	1-216-025-00	METAL CHIP	100	5%	1/10W	
R543	1-216-025-00	METAL CHIP	100	5%	1/10W	
R544	1-216-027-00	METAL CHIP	120	5%	1/10W	
R545	1-216-027-00	METAL CHIP	120	5%	1/10W	
R546	1-216-027-00	METAL CHIP	120	5%	1/10W	
R547	1-216-027-00	METAL CHIP	120	5%	1/10W	
R548	1-216-029-00	METAL CHIP	150	5%	1/10W	
R549	1-216-029-00	METAL CHIP	150	5%	1/10W	
R550	1-216-063-00	METAL CHIP	3.9K	5%	1/10W	

SONY-04779 / Druck 14

PANEL | DSP | POWER SUPPLY | JACK

Ref. No.	Part No.	Description				Remarks
R551	1-216-063-00	METAL CHIP	3.9K	5%	1/10W	
R552	1-216-057-00	METAL CHIP	2.2K	5%	1/10W	
R553	1-216-057-00	METAL CHIP	2.2K	5%	1/10W	
R554	1-216-063-00	METAL CHIP	3.9K	5%	1/10W	
R555	1-216-063-00	METAL CHIP	3.9K	5%	1/10W	
R556	1-216-075-00	METAL CHIP	12K	5%	1/10W	
R557	1-216-075-00	METAL CHIP	12K	5%	1/10W	
R558	1-216-025-00	METAL CHIP	100	5%	1/10W	
R559	1-216-025-00	METAL CHIP	100	5%	1/10W	
R560	1-216-027-00	METAL CHIP	120	5%	1/10W	
R561	1-216-027-00	METAL CHIP	120	5%	1/10W	
R562	1-216-021-00	METAL CHIP	68	5%	1/10W	
R563	1-216-021-00	METAL CHIP	68	5%	1/10W	
R564	1-216-021-00	METAL CHIP	68	5%	1/10W	
R565	1-216-027-00	METAL CHIP	120	5%	1/10W	
R566	1-216-027-00	METAL CHIP	120	5%	1/10W	
R567	1-216-049-00	METAL CHIP	1K	5%	1/10W	
R568	1-216-073-00	METAL CHIP	10K	5%	1/10W	
R569	1-216-049-00	METAL CHIP	1K	5%	1/10W	
R570	1-216-025-00	METAL CHIP	100	5%	1/10W	
R572	1-216-025-00	METAL CHIP	100	5%	1/10W	
R573	1-216-025-00	METAL CHIP	100	5%	1/10W	
R574	1-216-069-00	METAL CHIP	6.8K	5%	1/10W	
R575	1-216-089-00	METAL CHIP	47K	5%	1/10W	
R576	1-216-089-00	METAL CHIP	47K	5%	1/10W	
R577	1-216-073-00	METAL CHIP	10K	5%	1/10W	
R578	1-216-073-00	METAL CHIP	10K	5%	1/10W	
R579	1-216-073-00	METAL CHIP	10K	5%	1/10W	
R580	1-216-025-00	METAL CHIP	100	5%	1/10W	
R581	1-216-025-00	METAL CHIP	100	5%	1/10W	
R582	1-216-073-00	METAL CHIP	10K	5%	1/10W	
R583	1-216-049-11	METAL CHIP	10K	5%	1/10W	(H6600)
R584	1-216-049-00	METAL CHIP	1K	5%	1/10W	
R585	1-216-049-00	METAL CHIP	1K	5%	1/10W	
R586	1-216-049-00	METAL CHIP	1K	5%	1/10W	
R587	1-216-049-00	METAL CHIP	1K	5%	1/10W	
R588	1-216-049-00	METAL CHIP	1K	5%	1/10W	
R589	1-216-049-00	METAL CHIP	1K	5%	1/10W	
R590	1-216-049-00	METAL CHIP	1K	5%	1/10W	
R591	1-216-019-00	METAL CHIP	56	5%	1/10W	
R592	1-216-019-00	METAL CHIP	56	5%	1/10W	
R593	1-216-019-00	METAL CHIP	56	5%	1/10W	
R594	1-216-073-00	METAL CHIP	10K	5%	1/10W	
R621	1-216-049-00	METAL CHIP	1K	5%	1/10W	
R622	1-216-049-00	METAL CHIP	1K	5%	1/10W	

Ref. No.	Part No.	Description				Remarks
R623	1-216-081-00	METAL CHIP	22K	5%	1/10W	(H5600)
		< SWITCH >				
S501	1-554-303-21	SWITCH, TACTILE (SYSTEM POWER)				
S502	1-554-303-21	SWITCH, TACTILE (DISPLAY)				
S503	1-554-303-21	SWITCH, TACTILE (BALANCE)				
S504	1-554-303-21	SWITCH, TACTILE (WAKE UP)				
S505	1-554-303-21	SWITCH, TACTILE (DBFB)				
S506	1-554-303-21	SWITCH, TACTILE (EFFECT)				
S507	1-554-303-21	SWITCH, TACTILE (DYNAMIC SOUND)				
S508	1-554-303-21	SWITCH, TACTILE (PRESET)				
S509	1-554-303-21	SWITCH, TACTILE (PARAMETRIC EQUALIZER)				
S510	1-554-303-21	SWITCH, TACTILE (ON/OFF)				
S511	1-554-303-21	SWITCH, TACTILE (PRESENCE SURROUND)				
S512	1-554-303-21	SWITCH, TACTILE (MEMORY)				
S513	1-554-303-21	SWITCH, TACTILE (▶) (CURSOR CONTROL)				
S514	1-554-303-21	SWITCH, TACTILE (▲) (CURSOR CONTROL)				
S515	1-554-303-21	SWITCH, TACTILE (▼) (CURSOR CONTROL)				
S516	1-554-303-21	SWITCH, TACTILE (◀) (CURSOR CONTROL)				
S517	1-554-303-21	SWITCH, TACTILE (VIDEO)				
S518	1-554-303-21	SWITCH, TACTILE (AUDIO)				
		< VIBRATOR >				
X100	1-579-069-11	VIBRATOR, CRYSTAL (49.152MHz)				
X101	1-577-253-11	VIBRATOR, CERAMIC (16.93MHz)				
X102	1-579-125-11	VIBRATOR, CERAMIC (8MHz)				
X501	1-579-351-11	VIBRATOR, CERAMIC (15MHz)				
X502	1-579-125-11	VIBRATOR, CERAMIC (8MHz)				

****

*	A-4341-619-A	POWER SUPPLY BOARD, COMPLETE (AEP,UK)				
*	A-4341-623-A	POWER SUPPLY BOARD, COMPLETE (G, IT)				
		**********				
*	1-638-904-12	JACK BOARD				
		**********				
*	1-533-213-31	HOLDER, FUSE				
*	3-309-144-21	HEAT SINK				
	7-682-547-04	SCREW +BVTT 3X6 (S)				
		< CAPACITOR >				
C1	1-124-915-11	ELECT	10uF	20%	63V	
C2	1-162-306-11	CERAMIC	0.01uF	20%	16V	
C3	1-162-306-11	CERAMIC	0.01uF	20%	16V	
C5	1-136-153-00	FILM	0.01uF	5%	50V	
C7	1-162-306-11	CERAMIC	0.01uF	20%	16V	

POWER SUPPLY | JACK

Ref. No.	Part No.	Description				Remarks
C651	1-162-282-31	CERAMIC	100PF	10%	50V	
C652	1-162-282-31	CERAMIC	100PF	10%	50V	
C653	1-161-379-00	CERAMIC	0.01uF	20%	25V	
C654	1-162-294-31	CERAMIC	0.001uF	10%	50V	
C655	1-124-903-11	ELECT	1uF	20%	50V	
C656	1-124-119-00	ELECT	330uF	20%	16V	
C661	1-162-282-31	CERAMIC	100PF	10%	50V	
C662	1-162-282-31	CERAMIC	100PF	10%	50V	
C663	1-161-379-00	CERAMIC	0.01uF	20%	25V	
C664	1-162-294-31	CERAMIC	0.001uF	10%	50V	
C665	1-124-903-11	ELECT	1uF	20%	50V	
C903	1-126-943-11	ELECT	2200uF	20%	25V	
C904	1-126-943-11	ELECT	2200uF	20%	25V	
C907	1-136-165-00	FILM	0.1uF	5%	50V	
C908	1-136-165-00	FILM	0.1uF	5%	50V	
C909	1-124-477-11	ELECT	47uF	20%	25V	
C910	1-124-477-11	ELECT	47uF	20%	25V	
C911	1-124-915-11	ELECT	10uF	20%	63V	
C912	1-124-915-11	ELECT	10uF	20%	63V	
C913	1-124-915-11	ELECT	10uF	20%	63V	
C914	1-126-768-11	ELECT	2200uF	20%	16V	
C915	1-124-915-11	ELECT	10uF	20%	63V	
C916	1-124-915-11	ELECT	10uF	20%	63V	
C917	1-124-910-11	ELECT	47uF	20%	50V	
C918	1-124-915-11	ELECT	10uF	20%	63V	

< CONNECTOR >

CNJ1	* 1-580-739-11	SOCKET, CONNECTOR 15P (SYSTEM CONTROL 1)	
CNJ2	* 1-580-740-11	SOCKET, CONNECTOR 17P (SYSTEM CONTROL 2)	
CNP5	* 1-564-509-11	PLUG, CONNECTOR 6P	
CNP6	* 1-564-509-11	PLUG, CONNECTOR 6P	
CNP7	* 1-564-499-11	PIN, CONNECTOR 6P	
CNP902	1-564-506-41	PIN, CONNECTOR 3P (YEL)	
CNP903	* 1-564-321-00	PIN, CONNECTOR 2P	
CNP904	* 1-573-109-11	PIN, CONNECTOR 15P	
CNP904A	1-564-506-31	PIN, CONNECTOR 3P (RED)	
CNP906	* 1-573-087-11	PIN, CONNECTOR 13P	
CNP907	* 1-506-981-11	PIN, CONNECTOR 10P	
CNP908	1-568-317-11	SOCKET, CONNECTOR 6P	
CNP909	* 1-573-148-11	PLUG, CONNECTOR 12P	
CNP910	* 1-564-337-00	PIN, CONNECTOR 3P	
CNP911	* 1-564-505-11	PLUG, CONNECTOR 2P	

Ref. No.	Part No.	Description		Remarks
		< DIODE >		
D891	8-719-912-20	DIODE	1SS120	
D892	8-719-912-20	DIODE	1SS120	
D901	8-719-302-38	DIODE	RBV-602-01	
D902	8-719-912-20	DIODE	1SS120	
D903	8-719-912-20	DIODE	1SS120	
D904	8-719-200-82	DIODE	11ES2	
D905	8-719-200-82	DIODE	11ES2	
D906	8-719-200-82	DIODE	11ES2	
D907	8-719-200-82	DIODE	11ES2	
D908	8-719-200-82	DIODE	11ES2	
D909	8-719-200-82	DIODE	11ES2	
D910	8-719-912-20	DIODE	1SS120	
D911	8-719-933-36	DIODE	HZS6B1L	
D919	8-719-912-20	DIODE	1SS120	
D920	8-719-912-20	DIODE	1SS120	
		< IC >		
IC1	8-749-922-41	IC	GP1F34R	
IC2	8-749-922-41	IC	GP1F34R	
IC3	8-749-922-39	IC	GP1F34T	
IC651	8-759-634-50	IC	M5218AL	
IC901	8-759-602-66	IC	M5230L-A	
IC902	8-759-231-53	IC	M5F7805	
ICP903	1-532-846-21	LI	NK, IC 5A	
ICP904	1-532-846-21	LI	NK, IC 5A	
		< JACK >		
J2	1-569-662-11	JACK, PIN 1P (SUPER WOOFER)		
J651	1-562-837-21	JACK (HEADPHONES)		
J901	1-526-931-11	INLET, AC (AC IN)		
		< COIL >		
L901	⚠1-424-485-11	FILTER, LINE		
		< TRANSISTOR >		
Q651	8-729-141-30	TRANSISTOR	2SC3623A-LK	
Q652	8-729-900-61	TRANSISTOR	DTA114ES	
Q661	8-729-141-30	TRANSISTOR	2SC3623A-LK	
Q901	8-729-209-15	TRANSISTOR	2SD2012	
Q902	8-729-111-67	TRANSISTOR	2SB1094-L	

The components identified by mark ⚠ or dotted line with mark ⚠ are critical for safety.
Replace only with part number specified.

POWER SUPPLY | JACK | POWER AMP | VOLUME | SPEAKER | FLD | CONNECTOR | ELECT CAP | TRANSFORMER (A),(B)

Ref. No.	Part No.	Description					Remarks
Q903	8-729-900-80	TRANSISTOR	DTC114ES				
Q904	8-729-209-15	TRANSISTOR	2SD2012				
Q905	8-729-620-05	TRANSISTOR	2SC2603-EF				
Q906	8-729-620-05	TRANSISTOR	2SC2603-EF				
Q908	8-729-801-84	TRANSISTOR	2SB1013-4				
Q909	8-729-111-29	TRANSISTOR	2SD1616A-K				
Q910	8-729-111-29	TRANSISTOR	2SD1616A-K				
Q911	8-729-620-05	TRANSISTOR	2SC2603-EF				
		< RESISTOR >					
R651	1-249-433-11	CARBON	22K	5%	1/4W		
R652	1-249-439-11	CARBON	68K	5%	1/4W		
R653	1-249-400-11	CARBON	39	5%	1/4W		
R654	1-249-423-11	CARBON	3.3K	5%	1/4W		
R655	1-249-423-11	CARBON	3.3K	5%	1/4W		
R656	1-249-405-11	CARBON	100	5%	1/4W		
R657	1-249-441-11	CARBON	100K	5%	1/4W		
R661	1-249-433-11	CARBON	22K	5%	1/4W		
R662	1-249-439-11	CARBON	68K	5%	1/4W		
R663	1-249-400-11	CARBON	39	5%	1/4W		
R664	1-249-423-11	CARBON	3.3K	5%	1/4W		
R665	1-249-423-11	CARBON	3.3K	5%	1/4W		
R666	1-249-405-11	CARBON	100	5%	1/4W		
R902	1-247-903-00	CARBON	1M	5%	1/4W		
R905	1-249-413-11	CARBON	470	5%	1/4W		
R906	1-249-434-11	CARBON	27K	5%	1/4W		
R907	1-249-425-11	CARBON	4.7K	5%	1/4W		
R908	1-249-431-11	CARBON	15K	5%	1/4W		
R909	1-249-431-11	CARBON	15K	5%	1/4W		
R910	1-249-419-11	CARBON	1.5K	5%	1/4W		
R911	1-249-429-11	CARBON	10K	5%	1/4W		
R912	1-249-429-11	CARBON	10K	5%	1/4W		
R913	1-249-429-11	CARBON	10K	5%	1/4W		
R914	1-249-429-11	CARBON	10K	5%	1/4W		
R919	1-249-429-11	CARBON	10K	5%	1/4W		
R920	1-249-429-11	CARBON	10K	5%	1/4W		
R921	⚠1-216-428-00	METAL OXIDE	180	5%	1W		F
R922	1-249-429-11	CARBON	10K	5%	1/4W		
R923	1-249-425-11	CARBON	4.7K	5%	1/4W		
R924	1-249-429-11	CARBON	10K	5%	1/4W		
R925	1-249-429-11	CARBON	10K	5%	1/4W		
R926	1-249-429-11	CARBON	10K	5%	1/4W		
R928	1-247-742-11	CARBON	180	5%	1/2W		
R930	1-249-423-11	CARBON	3.3K	5%	1/4W		
R931	1-249-441-11	CARBON	100K	5%	1/4W		
R932	1-249-429-11	CARBON	10K	5%	1/4W		
		< RELAY >					
RY801	1-515-790-11	RELAY					
RY802	1-515-790-11	RELAY					
RY901	1-515-626-11	RELAY					

****

*	A-4341-620-A	POWER AMP BOARD, COMPLETE (AEP, UK)				
*	A-4341-624-A	POWER AMP BOARD, COMPLETE (G, IT)				
		**********				
*	1-638-906-12	VOLUME BOARD				
		**********				
*	1-638-907-12	SPEAKER BOARD				
		**********				
*	1-638-908-13	FLD BOARD				
		*********				
*	1-638-909-12	CONNECTOR BOARD				
		**********				
*	1-638-910-12	ELECT CAP BOARD				
		**********				
*	1-638-911-12	TRANSFORMER (A) BOARD				
		**********				
*	1-638-912-12	TRANSFORMER (B) BOARD				
		**********				
*	3-309-144-21	HEAT SINK				
	7-682-547-04	SCREW +BVTT 3X6 (S)				
		< CAPACITOR >				
C401	1-126-948-11	ELECT	100uF	20%	3V	
C402	1-130-955-00	FILM	0.01uF	5%	100V	
C403	1-126-948-11	ELECT	100uF	20%	3V	
C404	1-130-477-00	MYLAR	0.0033uF	5%	50V	
C405	1-126-948-11	ELECT	100uF	20%	3V	
C406	1-124-931-11	ELECT	47uF	47%	100V	
C421	1-136-955-00	FILM	0.01uF	5%	100V	
C601	1-162-306-11	CERAMIC	0.01uF	20%	1V	
C602	1-126-933-11	ELECT	100uF	20%	1V	
C603	1-124-915-11	ELECT	10uF	20%	6V	
C604	1-124-915-11	ELECT	10uF	20%	6V	
C701	1-126-176-11	ELECT	220uF	20%	1V	
C702	1-126-176-11	ELECT	220uF	20%	1V	
C704	1-162-306-11	CERAMIC	0.01uF	20%	1V	
C705	1-161-494-00	CERAMIC	0.022uF		2V	

The components identified by mark ⚠ or dotted line with mark ⚠ are critical for safety.
Replace only with part number specified.

POWE AMP | VOLUME | SPEAKER | FLD | CONNECTOR

ELECT CAP | TRANSFORMER (A),(B)

Ref. No.	Part No.	Description				Remarks
C706	1-124-927-11	ELECT	4.7uF	20%	100V	
C707	1-126-101-11	ELECT	100uF	20%	16V	
C708	1-124-907-11	ELECT	10uF	20%	50V	
C709	1-164-159-11	CERAMIC	0.1uF		50V	
C710	1-124-910-11	ELECT	47uF	20%	50V	
C711	1-164-159-11	CERAMIC	0.1uF		50V	
C801	1-124-907-11	ELECT	10uF	20%	50V	
C802	1-162-294-31	CERAMIC	0.001uF	10%	50V	
C803	1-162-282-31	CERAMIC	100PF	10%	50V	
C804	1-124-927-11	ELECT	4.7uF	20%	100V	
C806	1-136-165-00	FILM	0.1uF	5%	50V	
C807	1-136-165-00	FILM	0.1uF	5%	50V	
C808	1-136-165-00	FILM	0.1uF	5%	50V	
C809	1-136-165-00	FILM	0.1uF	5%	50V	
C821	1-124-907-11	ELECT	10uF	20%	50V	
C822	1-162-294-31	CERAMIC	0.001uF	10%	50V	
C823	1-162-282-31	CERAMIC	100PF	10%	50V	
C824	1-124-927-11	ELECT	4.7uF	20%	100V	
C828	1-136-165-00	FILM	0.1uF	5%	50V	
C829	1-136-165-00	FILM	0.1uF	5%	50V	
C831	1-162-306-11	CERAMIC	0.01uF	20%	16V	
C851	1-124-907-11	ELECT	10uF	20%	50V	
C852	1-162-294-31	CERAMIC	0.001uF	10%	50V	
C853	1-162-282-31	CERAMIC	100PF	10%	50V	
C854	1-124-927-11	ELECT	4.7uF	20%	100V	
C856	1-136-165-00	FILM	0.1uF	5%	50V	
C857	1-136-165-00	FILM	0.1uF	5%	50V	
C858	1-136-165-00	FILM	0.1uF	5%	50V	
C859	1-136-165-00	FILM	0.1uF	5%	50V	
C871	1-124-907-11	ELECT	10uF	20%	50V	
C872	1-162-294-31	CERAMIC	0.001uF	10%	50V	
C873	1-162-282-31	CERAMIC	100PF	10%	50V	
C874	1-124-927-11	ELECT	4.7uF	20%	100V	
C878	1-136-165-00	FILM	0.1uF	5%	50V	
C879	1-136-165-00	FILM	0.1uF	5%	50V	
C891	1-136-153-00	FILM	0.01uF	5%	50V (G, IT)	
C892	1-136-153-00	FILM	0.01uF	5%	50V (G, IT)	
C893	1-136-153-00	FILM	0.01uF	5%	50V (G, IT)	
C894	1-136-153-00	FILM	0.01uF	5%	50V (G, IT)	
C901	1-128-329-11	ELECT	10000uF	20%	42V	
C902	1-128-329-11	ELECT	10000uF	20%	42V	
C905	1-136-171-00	FILM	0.33uF	5%	50V	
C906	1-136-171-00	FILM	0.33uF	5%	50V	
C921	1-126-948-11	ELECT	100uF	20%	35V	
C923	1-126-949-11	ELECT	220uF	20%	35V	
C924	1-126-949-11	ELECT	220uF	20%	35V	
C925	1-126-948-11	ELECT	100uF	20%	35V	
C926	1-164-159-11	CERAMIC	0.1uF		50V	
C927	1-124-915-11	ELECT	10uF	20%	63V	
C928	1-124-915-11	ELECT	10uF	20%	63V	
C929	1-124-557-11	ELECT	1000uF	20%	25V	
C930	1-124-557-11	ELECT	1000uF	20%	25V	

< CONNECTOR >

CN601		1-560-942-00	PIN, CONNECTOR 6P
CN801	*	1-564-521-11	PLUG, CONNECTOR 6P
CN802	*	1-573-087-11	PIN, CONNECTOR 13P
CN891		1-563-311-11	CONNECTOR, BOARD TO BOARD 10P
CN892	*	1-564-518-11	PLUG, CONNECTOR 3P
CNJ603		1-569-656-11	HOUSING, CONNECTOR 8P
CNJ604		1-573-147-11	HOUSING, CONNECTOR 12P
CNJ902		1-573-095-11	SOCKET, CONNECTOR 15P
CNJ911	*	1-573-094-11	SOCKET, CONNECTOR 13P
CNJ912	*	1-573-094-11	SOCKET, CONNECTOR 13P
CNP7	*	1-564-499-11	PIN, CONNECTOR 6P
CNP602		1-568-319-11	SOCKET, CONNECTOR 8P
CNP901	*	1-564-321-00	PIN, CONNECTOR 2P
CNP912	*	1-564-338-00	PIN, CONNECTOR 4P
CNP913	*	1-564-337-00	PIN, CONNECTOR 3P
CNP914	*	1-564-339-00	PIN, CONNECTOR 5P
CNP915	*	1-564-505-11	PLUG, CONNECTOR 2P

< DIODE >

D401	8-719-815-85	DIODE	1S1585
D402	8-719-933-67	DIODE	HZS11B2L
D403	8-719-933-47	DIODE	HZS7B2L
D404	8-719-815-85	DIODE	1S1585
D405	8-719-815-85	DIODE	1S1585
D406	8-719-200-82	DIODE	11ES2
D409	8-719-934-22	LED	HZS30-2L
D701	8-719-912-20	DIODE	1SS120
D702	8-719-912-20	DIODE	1SS120
D703	8-719-912-20	DIODE	1SS120
D704	8-719-912-20	DIODE	1SS120
D705	8-719-912-20	DIODE	1SS120
D706	8-719-912-20	DIODE	1SS120
D801	8-719-912-20	DIODE	1SS120
D802	8-719-912-20	DIODE	1SS120

POWE AMP | VOLUME | SPEAKER | FLD | CONNECTOR | ELECT CAP | TRANSFORMER (A),(B)

Ref. No.	Part No.	Description	Remarks
D821	8-719-912-20	DIODE 1SS120	
D822	8-719-912-20	DIODE 1SS120	
D851	8-719-912-20	DIODE 1SS120	
D852	8-719-912-20	DIODE 1SS120	
D871	8-719-912-20	DIODE 1SS120	
D872	8-719-912-20	DIODE 1SS120	
D912	8-719-200-82	DIODE 11ES2	
D913	8-719-200-82	DIODE 11ES2	
D914	8-719-934-22	DIODE HZS30-2L	
D915	8-719-200-82	DIODE 11ES2	
D916	8-719-200-82	DIODE 11ES2	
D917	8-719-934-22	DIODE HZS30-2L	
D918	8-719-014-88	DIODE UZP-6.8BC	
D921	8-719-200-82	DIODE 11ES2	
D922	8-719-200-82	DIODE 11ES2	
D923	8-719-200-82	DIODE 11ES2	
D924	8-719-200-82	DIODE 11ES2	
		< IC >	
IC601	8-759-820-62	IC LB1639	
IC701	8-759-111-68	IC uPC1237HA	
IC702	8-759-987-16	IC LM393P	
IC703	8-759-512-73	IC LM35DZ-SL	
IC801	8-759-323-30	IC LM3875-2	
IC821	8-759-323-30	IC LM3875-2	
IC851	8-759-323-30	IC LM3875-2	
IC871	8-759-323-30	IC LM3875-2	
ICP901	⚠1-532-845-21	LI NK, IC 4A	
ICP902	⚠1-532-845-21	LI NK, IC 4A	
ICP905	⚠1-532-842-11	LI NK, IC 2A	
ICP906	⚠1-532-842-11	LI NK, IC 2A	
		< JACK >	
J891	1-537-336-11	TERMINAL BOARD (SP) (TO SATELLITE/BASS UNIT SPEAKER)	
		< COIL >	
L401	1-410-761-11	INDUCTOR 0.68mH	
L402	1-410-521-11	MICRO INDUCTOR	
L801	* 1-420-872-00	COIL, AIR CORE	
L821	* 1-420-872-00	COIL, AIR CORE	
L851	* 1-420-872-00	COIL, AIR CORE	
L871	* 1-420-872-00	COIL, AIR CORE	

The components identified by mark ⚠ or dotted line with mark ⚠ are critical for safety.
Replace only with part number specified.

Ref. No.	Part No.	Description	Remarks
		< TRANSISTOR >	
Q401	8-729-141-46	TRANSISTOR 2SC4431-LK	
Q402	8-729-141-46	TRANSISTOR 2SC4431-LK	
Q403	8-729-142-01	TRANSISTOR 2SC1941-LK	
Q404	8-729-141-46	TRANSISTOR 2SC4431-LK	
Q601	8-729-801-93	TRANSISTOR 2SD1387-3	
Q701	8-729-119-76	TRANSISTOR 2SA1175-HFE	
Q801	8-729-140-84	TRANSISTOR 2SC1841-PAFAEA	
Q821	8-729-140-84	TRANSISTOR 2SC1841-PAFAEA	
Q851	8-729-140-84	TRANSISTOR 2SC1841-PAFAEA	
Q871	8-729-140-84	TRANSISTOR 2SC1841-PAFAEA	
Q911	8-729-209-15	TRANSISTOR 2SD2012	
Q912	8-729-111-67	TRANSISTOR 2SA473	
		< RESISTOR >	
R401	1-249-437-11	CARBON 47K 5% 1/4W	
R402	1-249-437-11	CARBON 47K 5% 1/4W	
R404	⚠1-213-056-11	FUSIBLE 6.8 5% 1W	F
R405	1-249-441-11	CARBON 100K 5% 1/4W	
R406	1-249-437-11	CARBON 47K 5% 1/4W	
R407	1-249-405-11	CARBON 100 5% 1/4W	
R408	1-247-756-11	CARBON 2.2K 5% 1/2W	
R409	1-249-437-11	CARBON 47K 5% 1/4W	
R411	⚠1-213-056-11	FUSIBLE 6.8 5% 1W	F
R601	⚠1-212-849-00	FUSIBLE 4.7 5% 1/4W	F
R602	1-249-419-11	CARBON 1.5K 5% 1/4W	
R603	1-249-422-11	CARBON 2.7K 5% 1/4W	
R604	1-249-429-11	CARBON 10K 5% 1/4W	
R605	1-249-429-11	CARBON 10K 5% 1/4W	
R606	1-249-416-11	CARBON 820 5% 1/4W	
R701	1-249-433-11	CARBON 22K 5% 1/4W	
R702	1-249-441-11	CARBON 100K 5% 1/4W	
R703	1-249-433-11	CARBON 22K 5% 1/4W	
R704	1-249-433-11	CARBON 22K 5% 1/4W	
R705	1-249-429-11	CARBON 10K 5% 1/4W	
R706	1-249-441-11	CARBON 100K 5% 1/4W	(AEP, UK)
R707	1-249-429-11	CARBON 10K 5% 1/4W	
R708	1-249-424-11	CARBON 3.9K 5% 1/4W	
R709	1-249-427-11	CARBON 6.8K 5% 1/4W	
R710	1-249-429-11	CARBON 10K 5% 1/4W	
R711	1-249-417-11	CARBON 1K 5% 1/4W	
R712	1-249-437-11	CARBON 47K 5% 1/4W	(AEP, UK)
R802	1-249-437-11	CARBON 47K 5% 1/4W	
R803	1-249-420-11	CARBON 1.8K 5% 1/4W	
R804	1-249-437-11	CARBON 47K 5% 1/4W	

POWE AMP | VOLUME | SPEAKER | FLD | CONNECTOR

ELECT CAP | TRANSFORMER (A),(B)

Ref. No.	Part No.	Description				Remarks
R805	⚠1-217-151-00	RES, METAL PLATE 0.22			2W	F
R806	1-249-417-11	CARBON	1K	5%	1/4W	
R807	1-249-431-11	CARBON	15K	5%	1/4W	
R808	1-249-441-11	CARBON	100K	5%	1/4W	
R809	⚠1-212-958-00	FUSIBLE	10	5%	1/2W	F
R810	1-249-439-11	CARBON	68K	5%	1/4W	
R811	1-249-429-11	CARBON	10K	5%	1/4W	
R821	1-249-417-11	CARBON	1K	5%	1/4W	
R822	1-249-437-11	CARBON	47K	5%	1/4W	
R823	1-249-420-11	CARBON	1.8K	5%	1/4W	
R824	1-249-438-11	CARBON	56K	5%	1/4W	
R825	⚠1-217-151-00	RES, METAL PLATE 0.22			2W	F
R826	1-249-417-11	CARBON	1K	5%	1/4W	
R827	1-249-431-11	CARBON	15K	5%	1/4W	
R828	1-249-441-11	CARBON	100K	5%	1/4W	
R829	⚠1-212-958-00	FUSIBLE	10	5%	1/2W	F
R830	1-249-437-11	CARBON	47K	5%	1/4W	
R831	1-249-429-11	CARBON	10K	5%	1/4W	
R851	1-249-417-11	CARBON	1K	5%	1/4W	
R852	1-249-437-11	CARBON	47K	5%	1/4W	
R853	1-249-420-11	CARBON	1.8K	5%	1/4W	
R854	1-249-437-11	CARBON	47K	5%	1/4W	
R855	⚠1-217-151-00	RES, METAL PLATE 0.22			2W	F
R856	1-249-417-11	CARBON	1K	5%	1/4W	
R857	1-249-431-11	CARBON	15K	5%	1/4W	
R858	1-249-441-11	CARBON	100K	5%	1/4W	
R859	⚠1-212-958-00	FUSIBLE	10	5%	1/2W	F
R860	1-249-438-11	CARBON	56K	5%	1/4W	
R861	1-249-429-11	CARBON	10K	5%	1/4W	
R871	1-249-417-11	CARBON	1K	5%	1/4W	
R872	1-249-437-11	CARBON	47K	5%	1/4W	
R873	1-249-420-11	CARBON	1.8K	5%	1/4W	
R874	1-249-438-11	CARBON	56K	5%	1/4W	
R875	⚠1-217-151-00	RES, METAL PLATE 0.22			2W	F
R876	1-249-417-11	CARBON	1K	5%	1/4W	
R877	1-249-431-11	CARBON	15K	5%	1/4W	
R878	1-249-441-11	CARBON	100K	5%	1/4W	
R879	⚠1-212-958-00	FUSIBLE	10	5%	1/2W	F
R880	1-249-436-11	CARBON	39K	5%	1/4W	
R881	1-249-429-11	CARBON	10K	5%	1/4W	

The components identified by mark ⚠ or dotted line with mark ⚠ are critical for safety.
Replace only with part number specified.

Ref. No.	Part No.	Description				Remarks
R916	⚠1-249-429-11	CARBON	1K	5%	1/2W	F
R917	⚠1-247-752-11	CARBON	1K	5%	1/2W	F
R891	1-247-727-11	CARBON	10	5%	1/2W	(G, IT)
R892	1-247-727-11	CARBON	10	5%	1/2W	(G, IT)
R893	1-247-727-11	CARBON	10	5%	1/2W	(G, IT)
R894	1-247-727-11	CARBON	10	5%	1/2W	(G, IT)
R918	1-249-441-11	CARBON	100K	5%	1/4W	

< VARIABLE RESISTOR >

RV601	1-241-418-11	RES, VAR, CARBON 10K (VOLUME)

< TRANSFORMER >

T401	1-450-460-11	TRANSFORMER, DC-DC CONVERTER
T402	1-450-461-11	TRANSFORMER, DC-DC CONVERTER

****

MISCELLANEOUS
****

11	1-541-860-11	MOTOR, DC FAN
F901	⚠1-532-286-00	FUSE (T2.5A)
FL501	1-519-654-11	INDICATOR TUBE, FLUORESCENT
PT101	⚠1-450-355-11	TRANSFORMER, POWER (UK)
PT101	⚠1-450-356-11	TRANSFORMER, POWER (AEP, G, IT)

****

ACCESSORIES & PACKING MATERIALS
****

*	4-945-075-01	CUSHION (RIGHT)
*	4-945-076-01	CUSHION (LEFT)

****

HARDWARE LIST

****

#2	7-685-203-19	SCREW +KTP 2X5 TYPE2 NON-SLIT
#3	7-685-132-19	SCREW +BTP 2.6X5 TYPE2 N-S
#6	7-685-647-79	SCREW +BVTP 3X10 TYPE2 N-S
#7	7-685-870-09	SCREW +BVTT 3X5 (S)
#8	7-682-547-04	SCREW +BVTT 3X6 (S)
#9	7-685-645-79	SCREW +BVTP 3X6 TYPE2 IT-3

English
91I1659-1

Sony Corporation
Audio Group

9-956-560-11
Printed by: Schaltungsdienst Lange, Berlin (GERMANY)

Published by Customer Relations and Service Group

3772

CDP-H6600

SERVICE MANUAL

AEP Model
UK Model
E Model

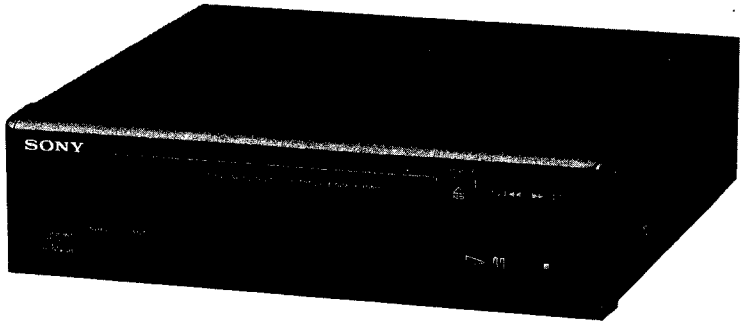

This set is the CD player section in MHC-5600/6600 and FH-E939CD.

Model Name Using Similar Mechanism	CDP-H300
CD Mechanism Type	CDM13B-5BD5
Base Unit Name	BU-5BD5

TABLE OF CONTENTS

SPECIFICATIONS

System	Compact disc digital audio system
Laser	Semiconductor laser (λ = 780 nm) Emission duration: continuous
Laser output	Max. 44.6 μW* * This output is the value measured at a distance of about 200 mm from the objective lens surface on the Optical Pick-up Block.
Signal to noise ratio	More than 90 dB
Dynamic range	More than 90 dB
Harmonic distortion	Less than 0.05% (at 1 kHz)
Channel separation	More than 90 dB
Output level	2 V (at 50 kilohms)
Load impedance	More than 10 kilohms
Outputs	DIGITAL OUT OPTICAL (optical output connector): wave length 660 nm, output level –18 dBm

CLASS 1 LASER PRODUCT
LUOKAN 1 LASERLAITE
KLASS 1 LASERAPPARAT

This appliance is classified as a CLASS 1 LASER product. The CLASS 1 LASER PRODUCT label is located on the rear exterior.

COMPACT DISC PLAYER

SONY®

LASER DIODE AND FOCUS SEARCH OPERATION CHECK

1. Make POWER switch on with no disc inserted and disc table closed.
2. Confirm that the following operation is performed while observing the objective lens.

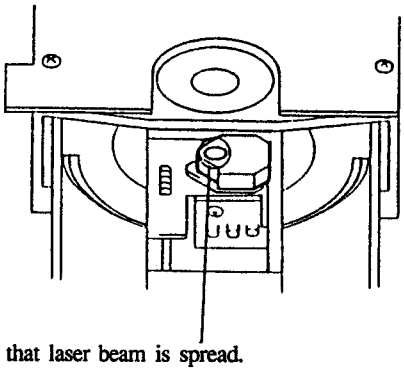

❶ Confirm that laser beam is spread.
❷ Up and down motion of the objective lens. (3 times)

HOW TO OPEN THE DISC TRAY WHEN POWER SWITCH TURNS OFF

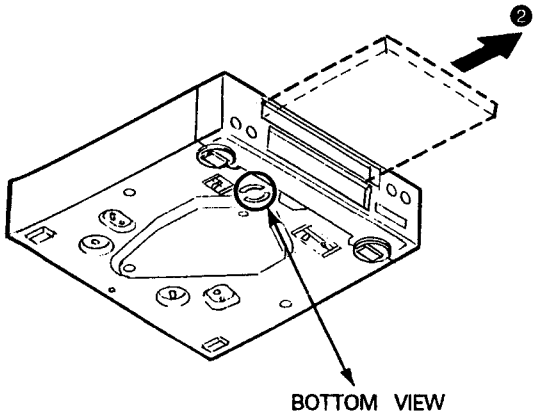

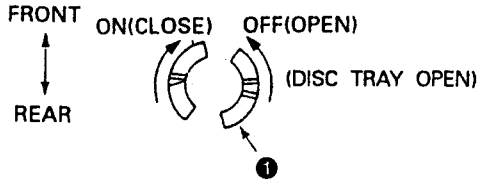

(1) Insert to ❶ for tapering driver, etc., and turn in the direction of arrow OFF. (Disc tray open)
(2) Tray as come out little of front panel, pull out in the direction of arrow ❷ by hand.

NOTES ON HANDLING THE OPTICAL PICK-UP BLOCK OR BASE UNIT

- The laser diode in the optical pick-up block may suffer electrostatic break-down because of the potential difference generated by the charged electrostatic load, etc. on clothing and the human body. During repair, pay attention to electrostatic break-down and also use the procedure in the printed matter which is included in the repair parts.
- The flexible board is easily damaged and should be handled with care.

NOTES ON LASER DIODE EMISSION CHECK

The laser beam on this model is concentrated so as to be focused on the disc reflective sureface by the objective lens in the optical pick-up block. Therefore, when checking the laser diode emission, observe from more than 30 cm away from the objective lens.

SAFETY-RELATED COMPONENT WARNING!!

COMPONENTS IDENTIFIED BY MARK ⚠ OR DOTTED LINE WITH MARK ⚠ ON THE SCHEMATIC DIAGRAMS AND IN THE PARTS LIST ARE CRITICAL TO SAFE OPERATION. REPLACE THESE COMPONENTS WITH SONY PARTS WHOSE PART NUMBERS APPEAR AS SHOWN IN THIS MANUAL OR IN SUPPLEMENTS PUBLISHED BY SONY.

SECTION 1
GENERAL

LOCATION OF CONTROLS

This section is extracted from instruction manual.

CD Player Section

1. Disc tray
2. CHECK button
3. EDIT/TIME FADE button
4. CD operation buttons
   ⏏ : OPEN/CLOSE
   ▷II : Play/pause
   ⏮ ◀◀ ▶▶ ⏭ : Manual search (when kept depressed)/Automatic Music Sensor (when pressed)
5. Display window

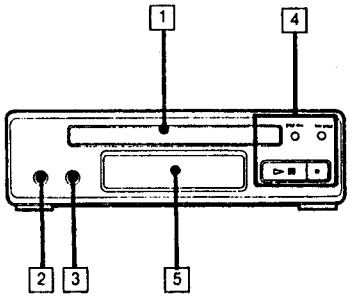

SECTION 2
ELECTRICAL BLOCK CHECKING

Note :
1. CD Block basically constructed to operate without adjustment. Therefore, check each item in order given.
2. Use YEDS-18 disc (3-702-101-01) unless otherwise indicated.
3. Use the oscilloscope with more than 10MΩ impedance.
4. Clean an object lens by an applicator with neutral detergent when the signal level is low than specified value with the following checks.

S Curve Check

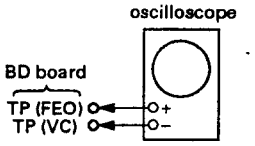

Procedure :
1. Connect oscilloscope to test point TP (FEO) on BD board.
2. Connect between test point TP (FES) and TP (VC) by lead wire.
3. Turned Power switch on and actuate the focus serch. (actuate the focus serch when disc table is moving in and out.)
4. Check the oscilloscope waveform (S curve) is symmetrical between A and B. And confirm peak to peak level within 3±1Vp-p.

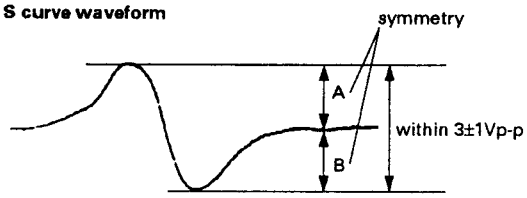

5. After check, remove the lead wire connected in step 2.

Note :
- Try to measure several times to make sure that the ratio of A : B or B : A is more than 10 : 7.
- Take sweep time as long as possible and light up the brightness to obtain best waveform.

RF Level Check

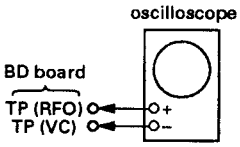

Procedure :
1. Connect oscilloscope to test point TP (RFO) on BD board.
2. Turn Power switch on.
3. Put disc (YEDS-18) in and playback.
4. Confirm that oscilloscope waveform is clear and check RF signal level is correct or not.

Note :
Clear RF signal waveform means that the shape " ◊ " can be clearly distinguished at the center of the waveform.

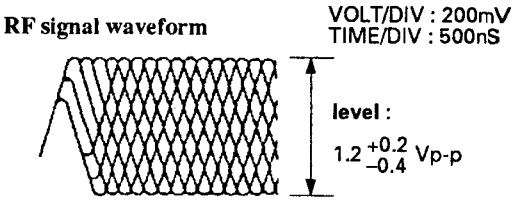

E-F Balance Check

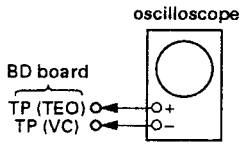

Procedure :
1. Connect test point TP (ADJ) to ground and TP (TES) to TP (VC) with lead wire.
2. Connect oscilloscope to test point TP (TEO) on BD board.
3. Turn Power switch on.
4. Put disc (YEDS-18) in and playback.
5. Confirm that the oscilloscope waveform is symmetrical on the top and bottom in relation to 0V, and check this level.

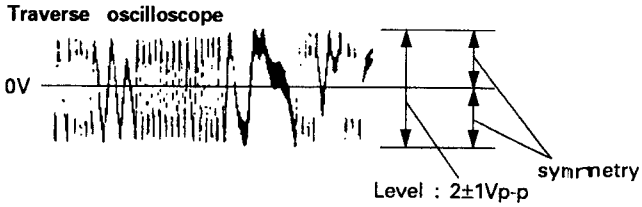

6. Remove the lead wire connected in step 1.

RF PLL FREE-RUN FREQUENCY CHECK

Procedure :

1. Connect frequency counter to test point (PCK) with lead wire.

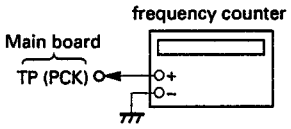

2. Turn Power switch on.
3. Confirm that reading on frequency counter is 4.3218MHz.

Focus/Tracking Gain

This gain has a margin, so even if it is slightly off.
There is no problem.
Therefore, do not perform, this adjustment.
Please note that it should be fixed to mechanical center position when you moved and do not know original position.

Checking for Location

[BD BOARD] – Conductor Side –

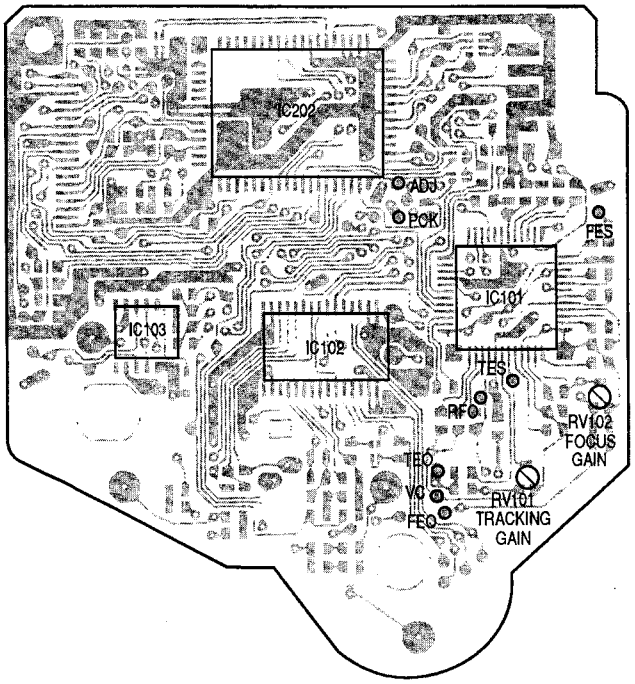

[TEST MODES]

1. Test mode of display micon (IC401)

Ground Pin ㉝ of IC401 to GND and turn ON the POWER switch, thus you can test the following 3 tests.

(1) All FL tube lamps
This mode is actuated immediately after turning ON the POWER switch.

(2) FL tube segment check
This mode is actuated by pressing the ⏏ key in the state of (1). Every time the ⏏ key is pressed, the segments are indicated sequentially from the segment a. When the last 1 segment is displayed, keying in is no longer accepted while continuing the lighting-up state of the last segment. Conditions are normal provided all lamps light up in the following order.

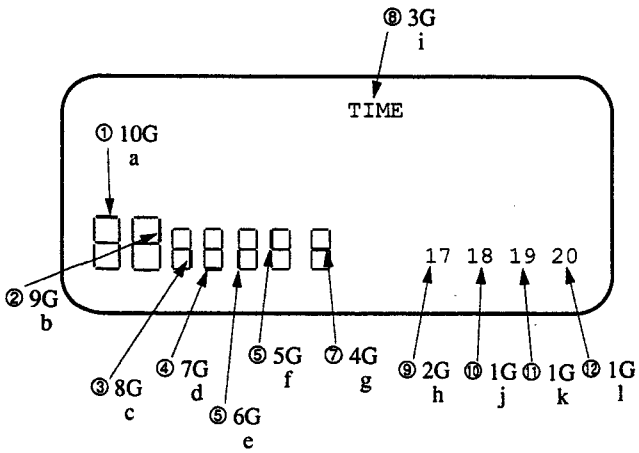

(3) KEY check
This mode is effected by pressing the ⏏ key in the state of (1), while indicating "1." Every time a new key is pressed subsequently, the indicated number is incremented. Conditions are normal provided "7" is indicated when all types of keys are pressed. Even if a key is pressed again, it is not counted.

* To leave the mode (2) or (3), press the ⏏ and ▷II keys in duplication, thereby the mode returning to all ON mode.

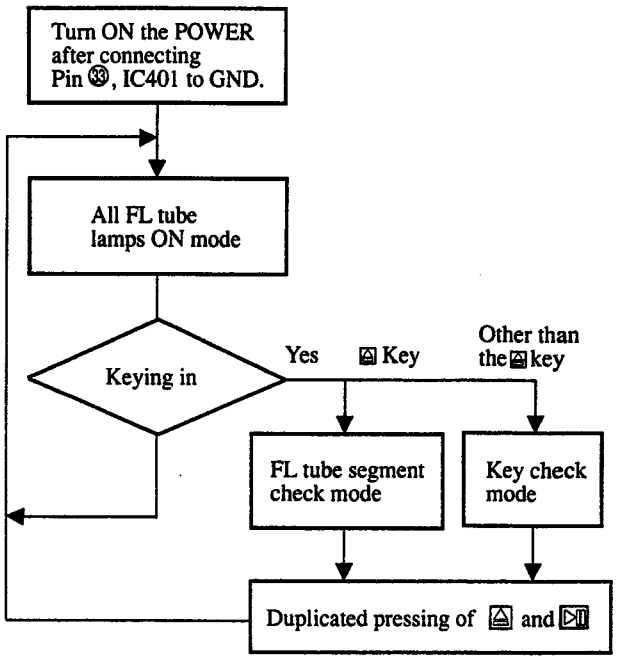

2. Test Modes of CD Syscon (IC202)

(1) ADJUST mode
When this mode is effected, the machine is operated normally except for the following.

- When pin ⑲, IC202 (ADJ) is set to "L" after turning ON the POWER switch:

1. GFS is no longer monitored during PLAY, PAUSE or SEARCH, while not stopping even with GFS remaining still at "L" (NG).
2. No high-speed feeding is activated during SEARCH.
3. Focus gain is reset to normal gain during PLAY (normally, the gain is lowered to reduce noise when FOCUS is locked).

- When Pin ⑬, IC202 (AFADJ) is set to "L" after turning ON the POWER switch:

1. Regardless of Pin ⑲ (ADJ) of the CLV-S fixed function, the CLV mode during PLAY becomes CLV-S (rough servo) only while Pin ⑬ remains "L".

(2) AFADJUST mode
In this mode, it is possible to check the interface between the display micon (IC401) and CD syscon (IC202).

- Set Pin ⑬, IC202 (AFADJ) to "L" before turning ON the POWER switch.

1. Every time the ⏏ key is pressed after turning On the POWER switch, indication on the FL tube is switched correspondingly. Conditions are normal provided the indication repeats the 4 patterns including all lamp ON.

SECTION 3
DIAGRAMS

3-1. BLOCK DIAGRAM

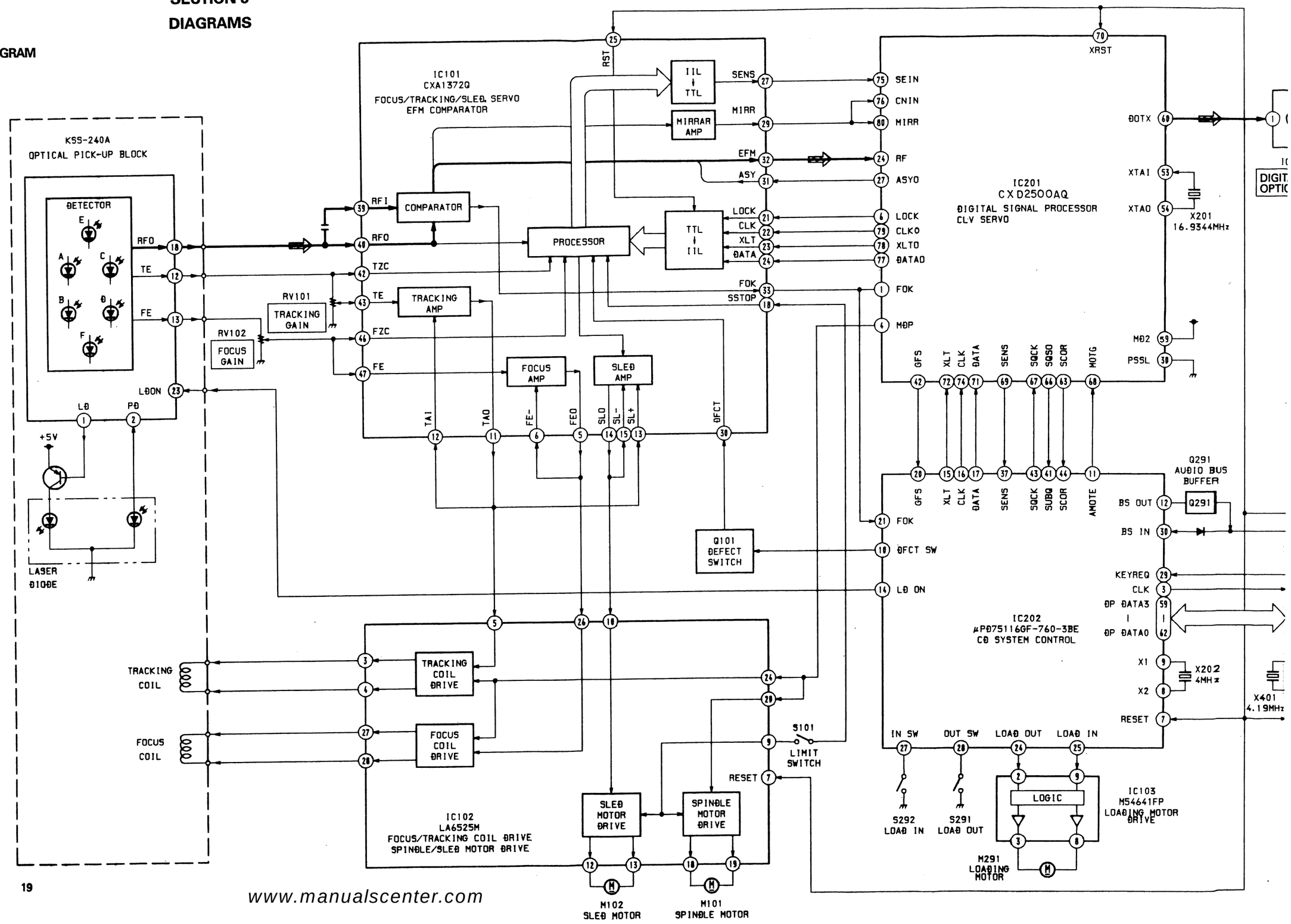

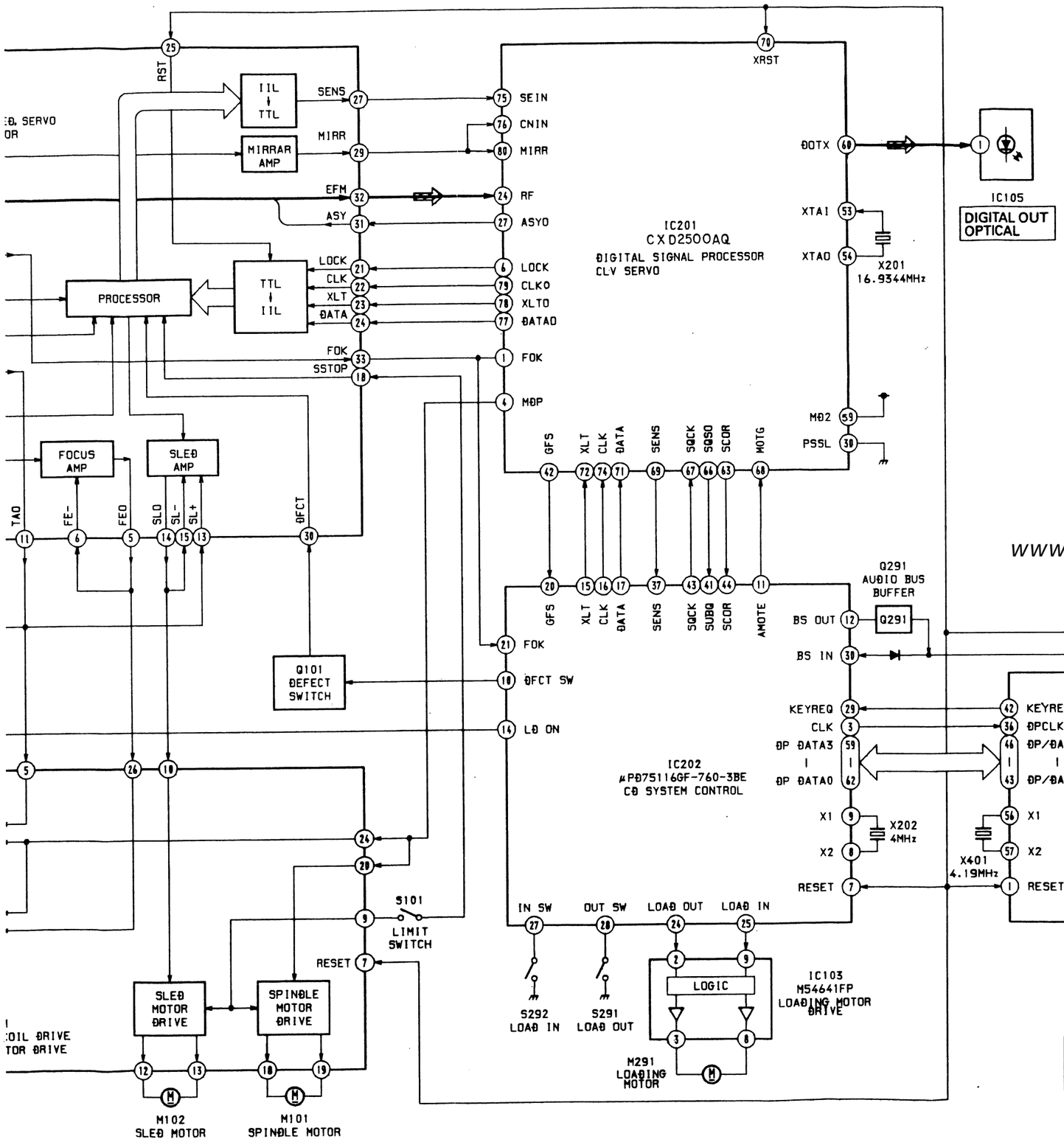

3-2. SEMICONDUCTOR LEAD LAYOUTS

2SA1162-G
2SC3052-EF
2SC3395
2SC3624A-L16
2SC4154-F

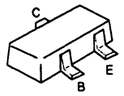

2SA1341
2SB1122-S

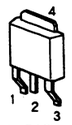

1 : BASE
2 : COLLECTOR
3 : EMITTER
4 : COLLECTOR

2SB1122-S
2SD1623

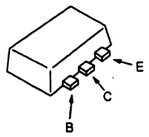

DTZ4.7B
1SS355

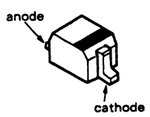

EC10DS2
EC10QS-04

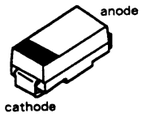

RD6.8M-B2
RD8.2M-B3

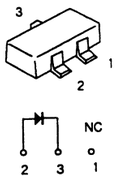

1SS266

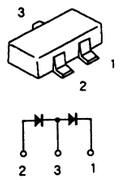

1S2836

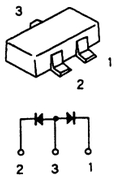

• SEMICONDUCTOR LOCATION

Ref. No.	Location
IC101	D-1
IC101	G-7
IC102	B-5
IC102	H-6
IC103	B-2
IC103	H-5
IC105	B-3
IC201	G-11
IC202	F-6
IC301	G-12
IC302	F-12
IC304	F-1
IC401	D-12
Q101	C-1
Q101	F-7
Q102	B-1
Q103	B-1
Q201	F-12
Q201	G-13
Q301	G-1
Q302	E-1
Q303	G-1
Q304	E-1
Q305	E-1
Q306	E-1
D101	B-3
D101	H-5
D102	B-3
D103	B-3
D104	B-6
D106	B-6
D113	B-3
D131	B-3
D201	F-12
D301	E-1
D302	E-1
D305	E-1
D306	E-1
D401	D-14
D402	D-15
D403	D-11

Note:
- ○——: indicated a lead wire mounted on the component side.
- ■ : Part mounted on the conductor side.
- ● : Through hole.
- ▒: Pattern from the side which enables seeing.
- ▒: Pattern of the rear side.

3-3. PRINTED WIRING BOARDS

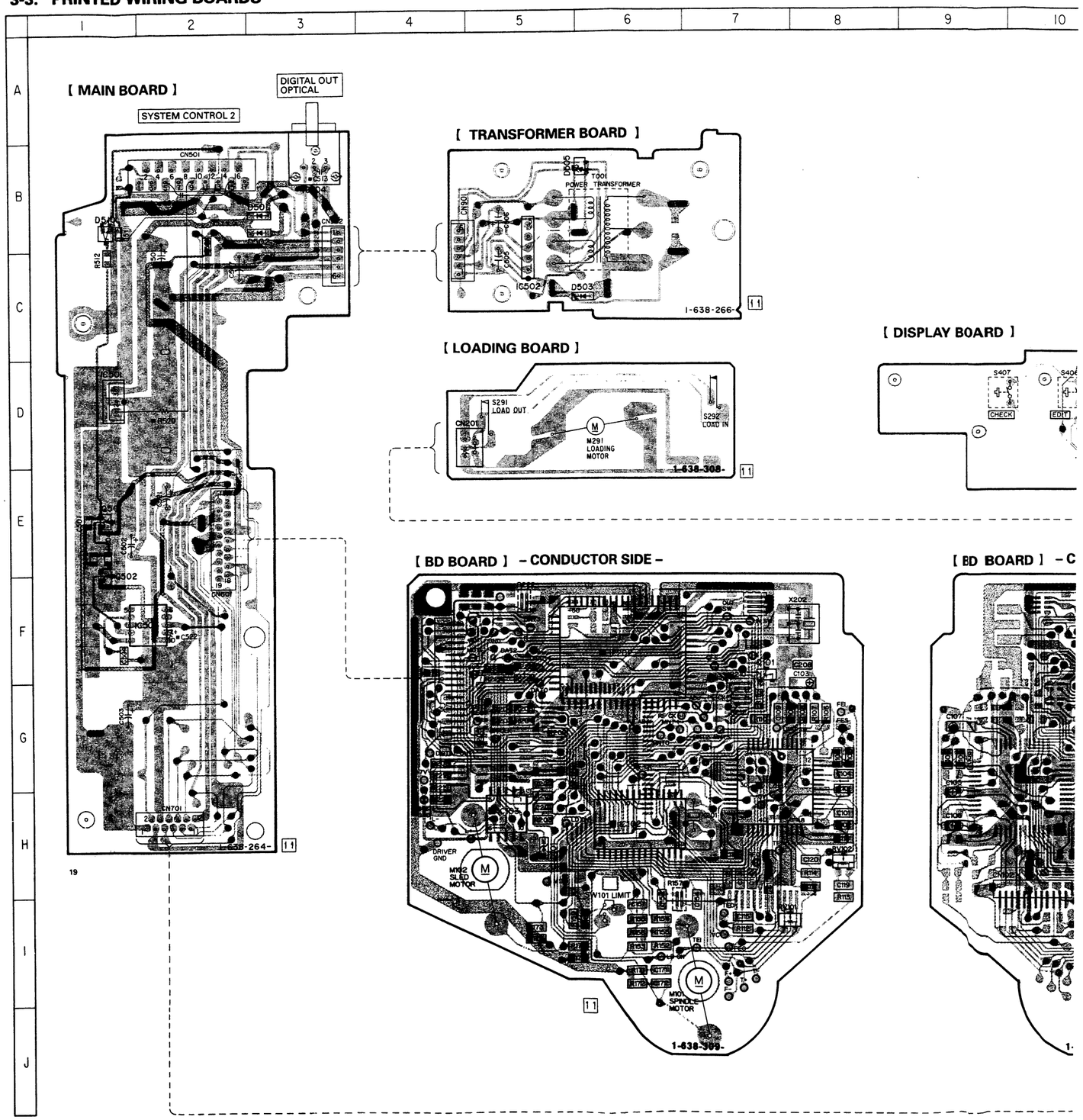

PRINTED WIRING BOARDS

1 2 3 4 5 6 7 8 9 10 11 12 13 14 15 16

[MAIN BOARD]

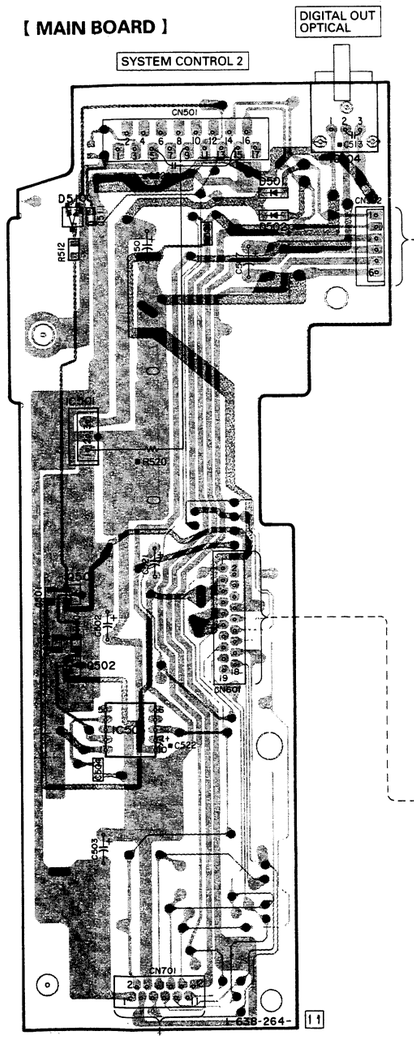

[TRANSFORMER BOARD]

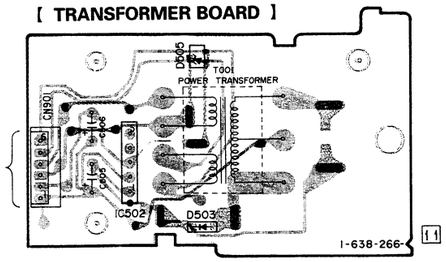

[LOADING BOARD]

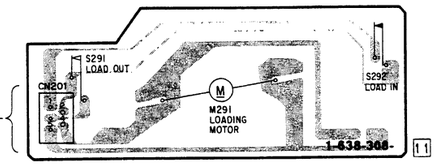

FL401 FLUORESCENT INDICATOR TUBE

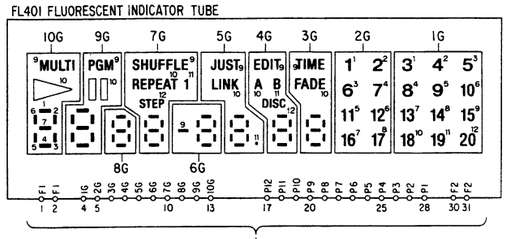

[DISPLAY BOARD]

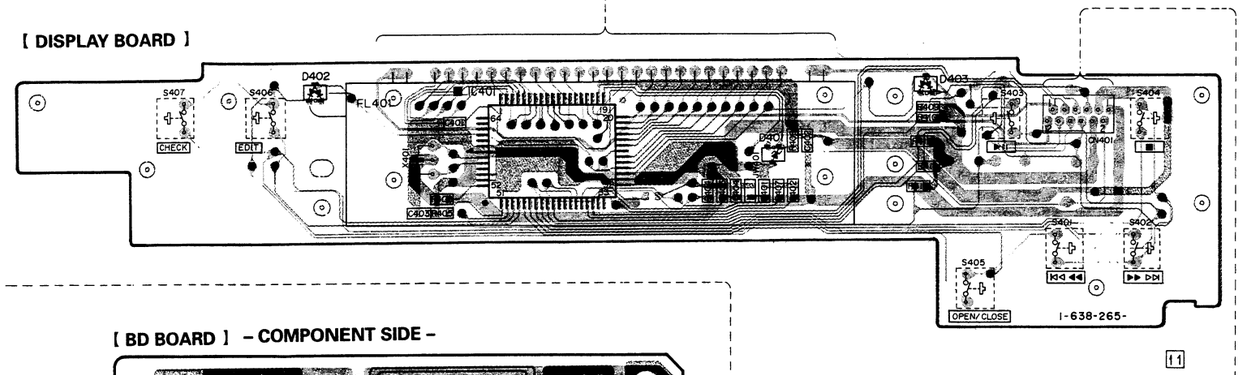

[BD BOARD] – CONDUCTOR SIDE –

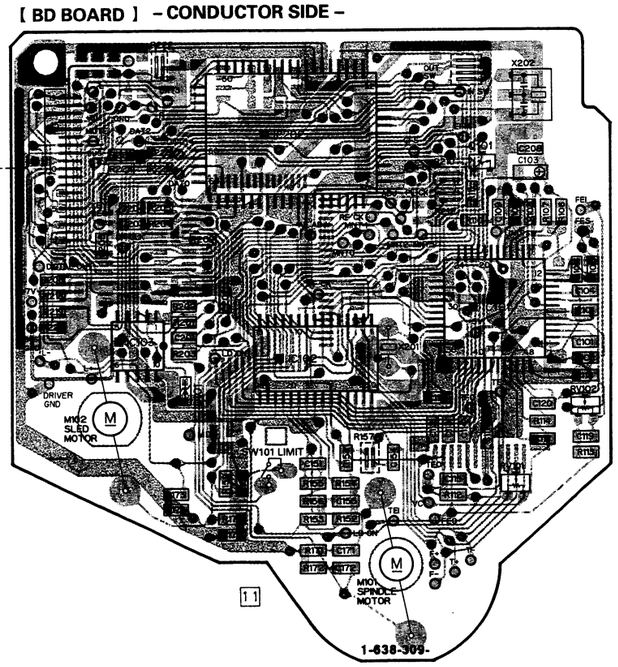

[BD BOARD] – COMPONENT SIDE –

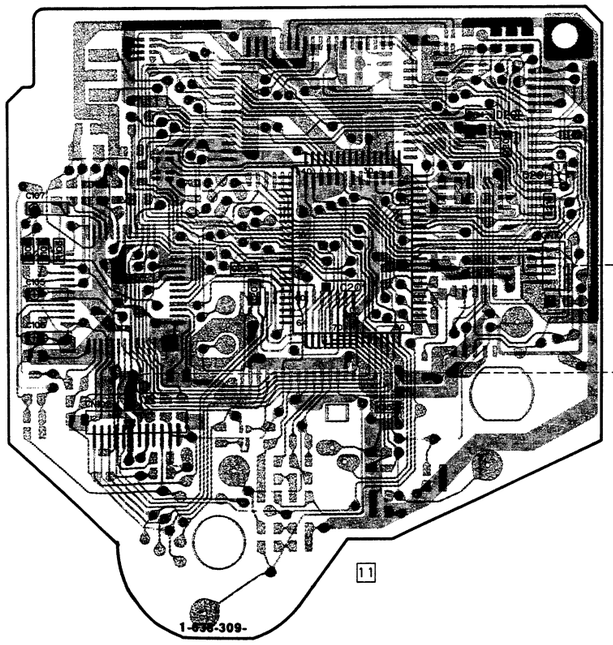

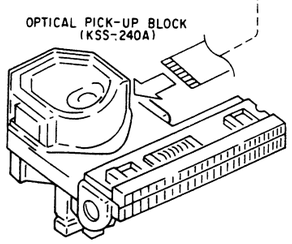

3-4. SCHEMATIC DIAGRAM – BD SECTION –

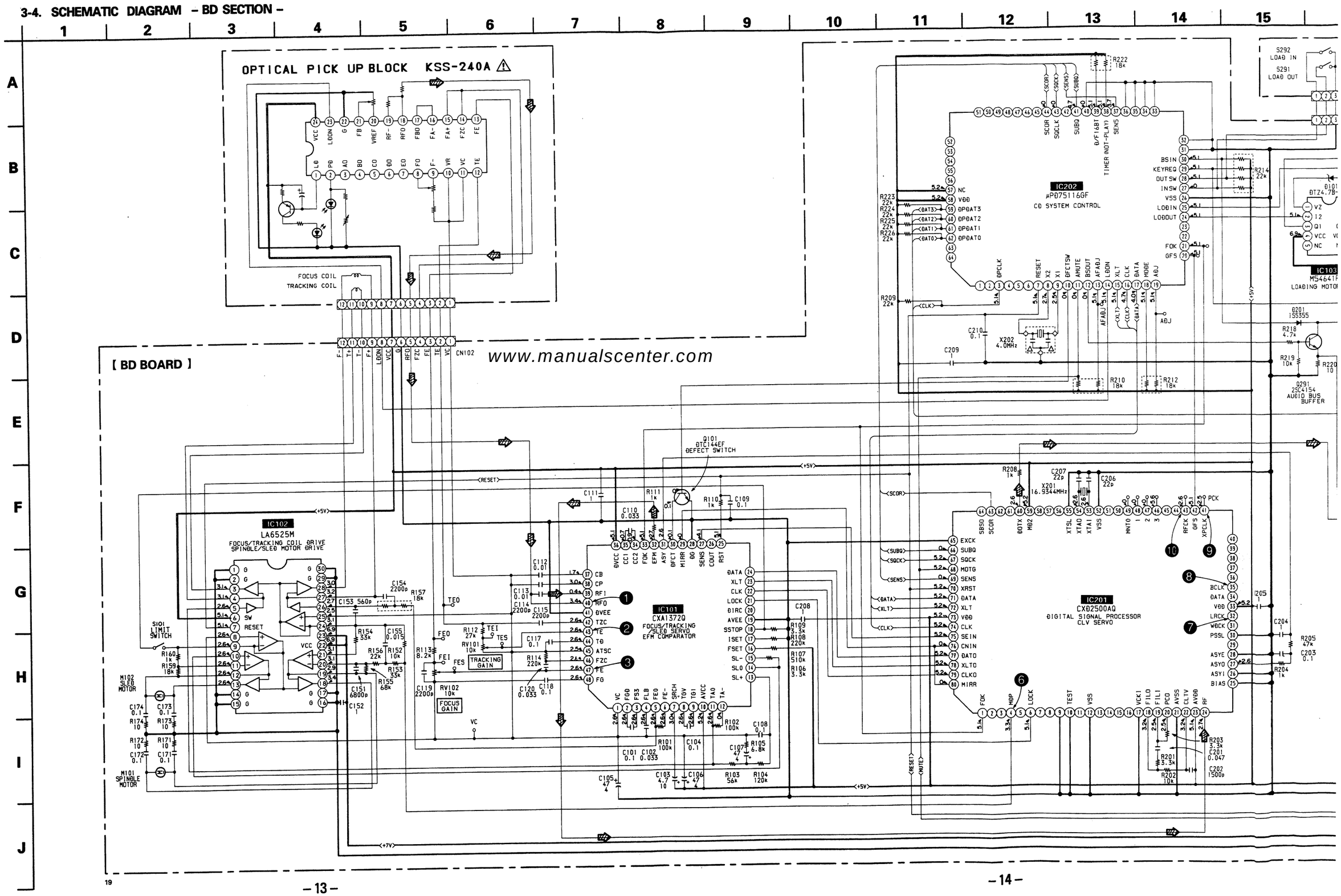

VIDE-13772/Druck 5

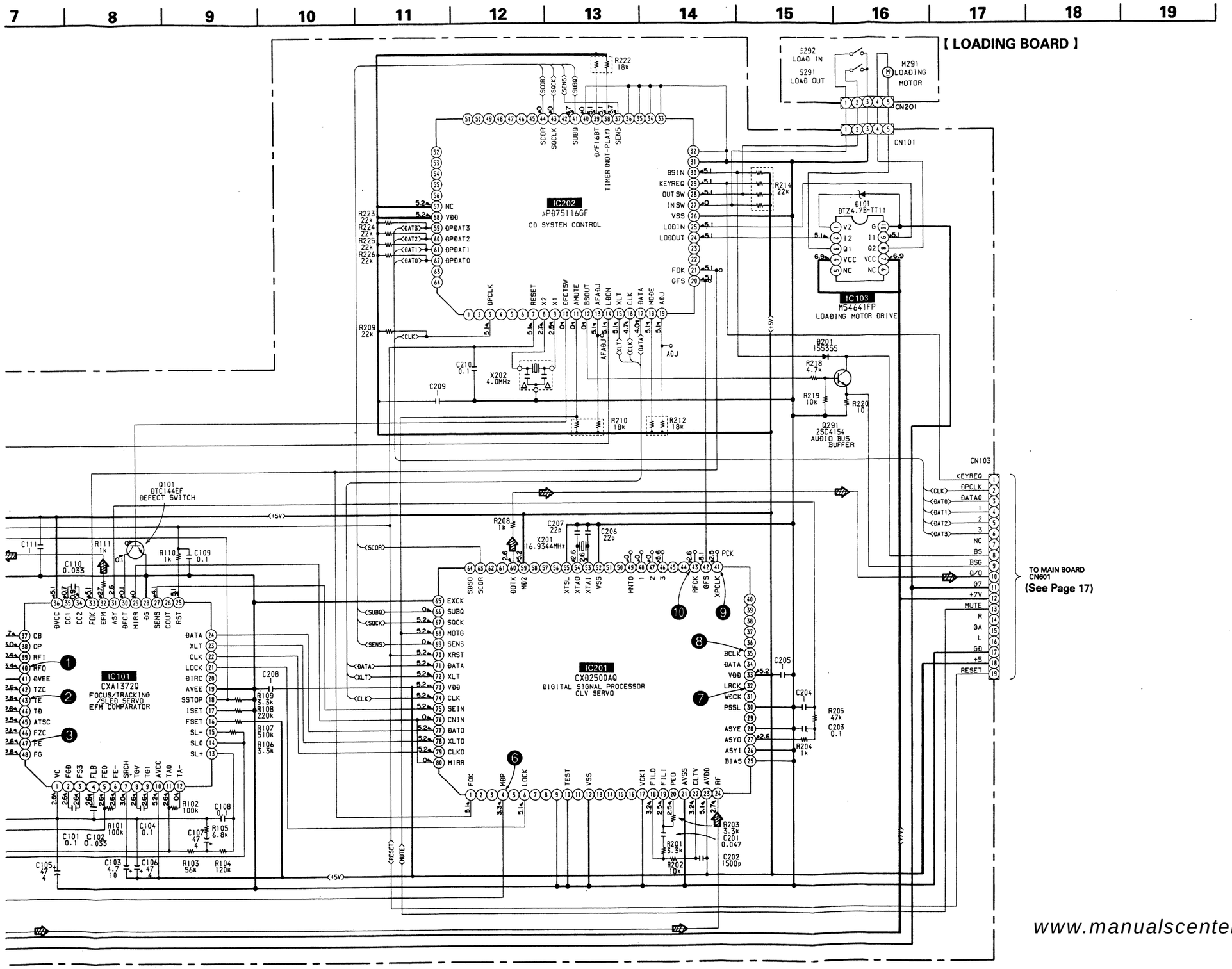

• **WAVEFORMS**

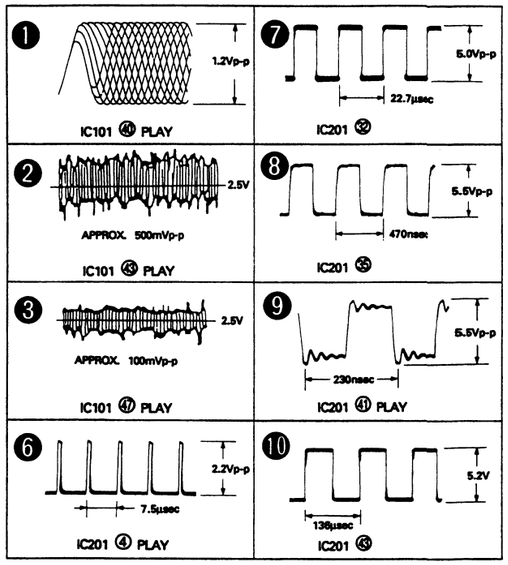

Note:

- All capacitors are in μF unless otherwise noted. pF: μμF 50WV or less are not indicated except for electrolytics and tantalums.
- All resistors are in ohms, 1/4W or less unless otherwise noted.
- △ : internal component.

The components identified by mark ⚠ or dotted line with mark ⚠ are critical for safety.
Replace only with part number specified.

- ▬▬: B + Line.
- ▪▪▪▪: B – Line.
- ▭: adjustment for repair.
- Voltages are DC between measurement points and ground.
- no mark : PLAY
- Voltages are taken with a VOM (input impedance 10MΩ). Voltage variations may be noted due to normal production tolerances.
- Waveforms are taken with a oscilloscope.
- Circled numbers refer to waveforms.
- Signal path
  ⇨: CD

3-5. SCHEMATIC DIAGRAM – MAIN SECTION –

• See page 15 for note.

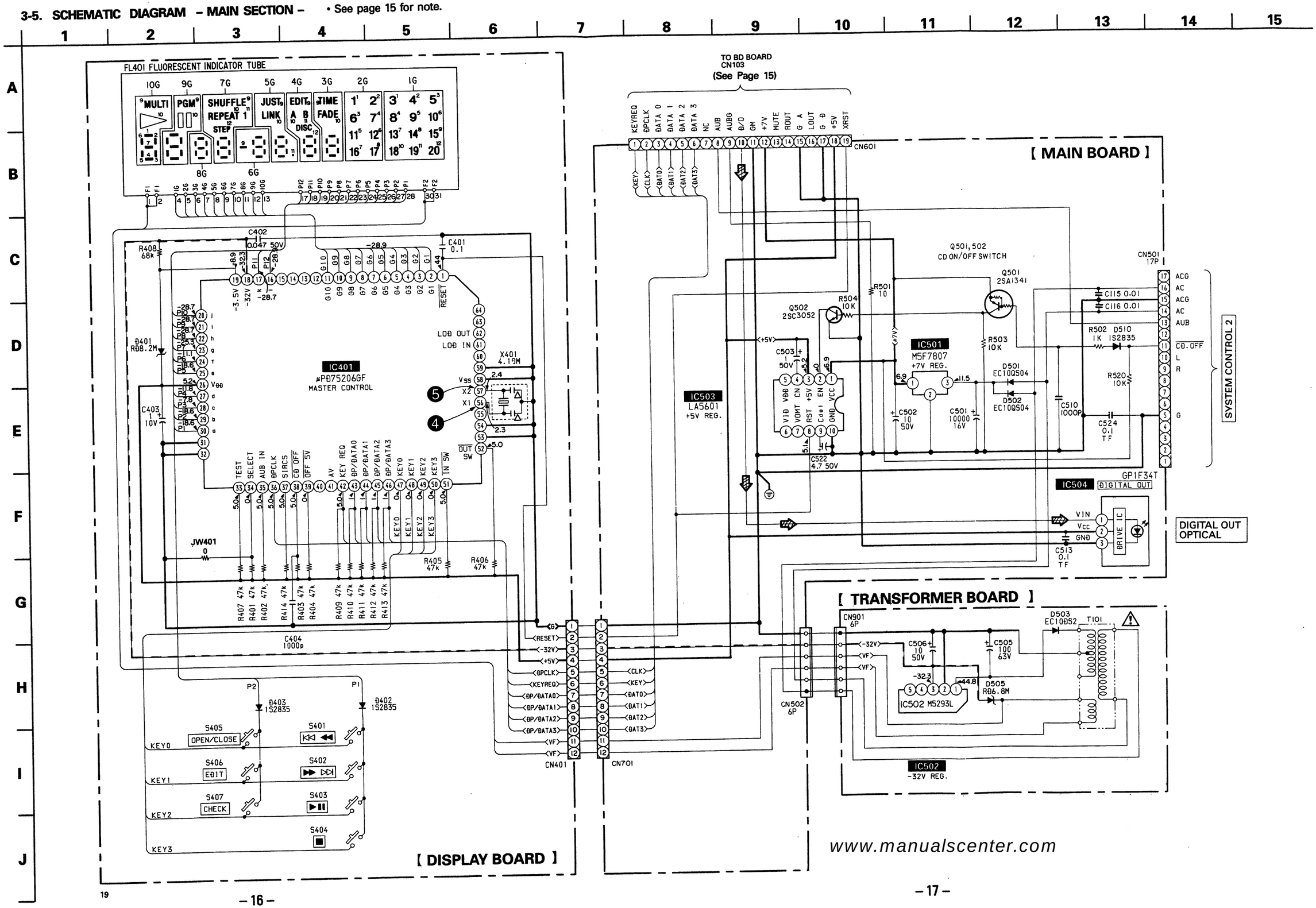

VIDE-13772/Druck 7

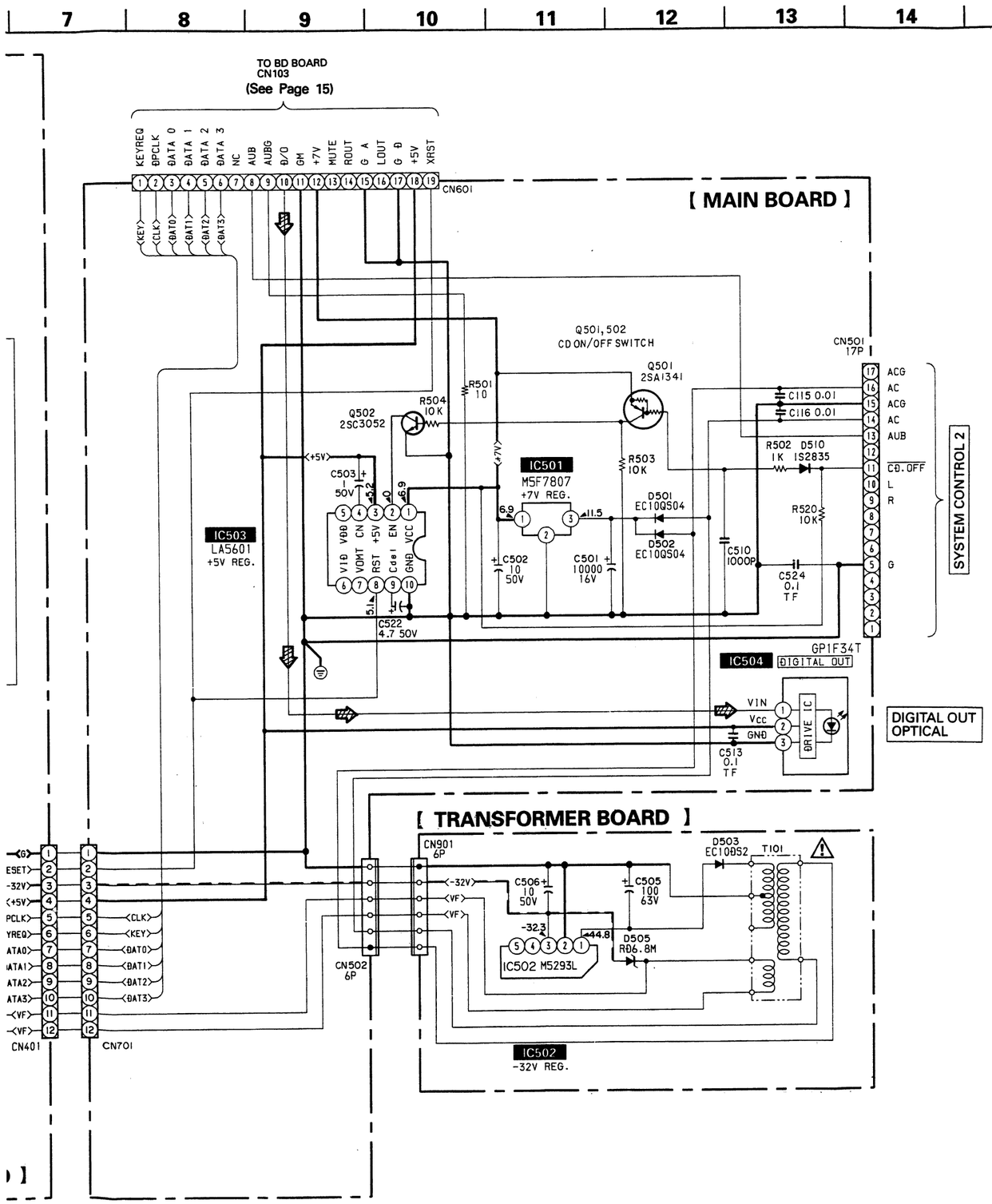
7
8
9
10
11
12
13
14
15
TO BD BOARD
CN103
(See Page 15)
KEYREQ
DPCLK
DATA 0
DATA 1
DATA 2
DATA 3
NC
AUB
AUBG
D/O
GM
+7V
MUTE
ROUT
G A
LOUT
G D
+5V
XRST
CN601
[MAIN BOARD]
Q501, 502
CD ON/OFF SWITCH
Q501
2SA1341
R501
10
R504
10K
Q502
2SC3052
C115 0.01
C116 0.01
CN501
17P
ACG
AC
ACG
AC
AUB
CD.OFF
L
R
G
SYSTEM CONTROL 2
R502 1K
D510 IS2835
R503
10K
IC501
M5F7807
+7V REG.
D501
EC10QS04
D502
EC10QS04
R520
10K
C510
1000P
C524
0.1
TF
C503
1
50V
IC503
LA5601
+5V REG.
VIB
VDD
VDMT
CN
RST
+5V
Cdel
EN
VCC
GND
C502
10
50V
C501
10000
16V
C522
4.7 50V
IC504
GP1F34T
DIGITAL OUT
VIN
Vcc
GND
DRIVE IC
C513
0.1
TF
DIGITAL OUT
OPTICAL
[TRANSFORMER BOARD]
CN901
6P
D503
EC10DS2
T101
C506
10
50V
C505
100
63V
-32.3
-44.8
D505
RD6.8M
IC502 M5293L
CN502
6P
IC502
-32V REG.
CN401
CN701

• **WAVEFORMS**

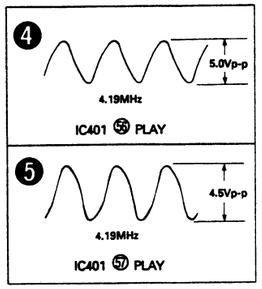
4
5.0Vp-p
4.19MHz
IC401 58 PLAY
5
4.5Vp-p
4.19MHz
IC401 57 PLAY

3-6. IC BLOCK DIAGRAMS

IC101 CXA1372Q

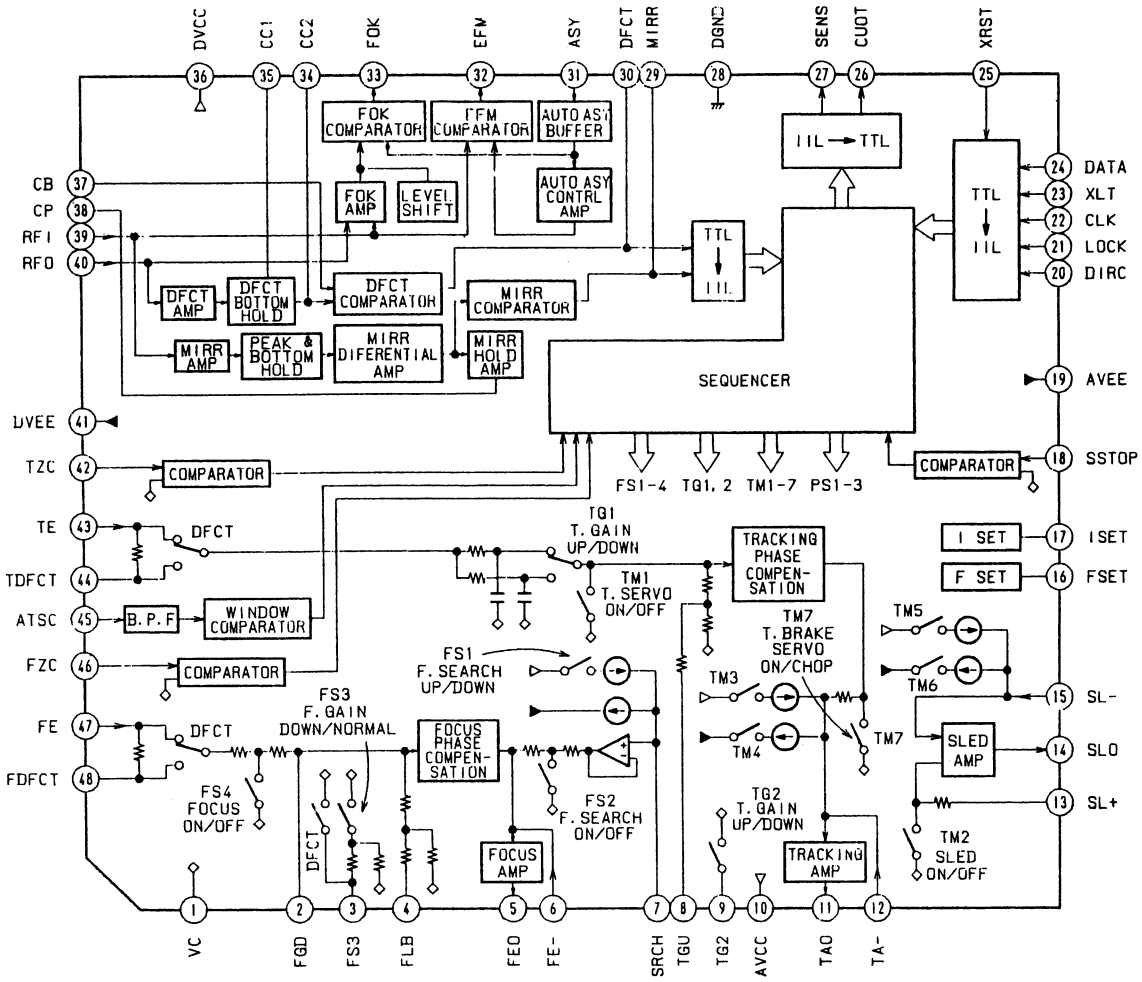

IC103 M54641FP

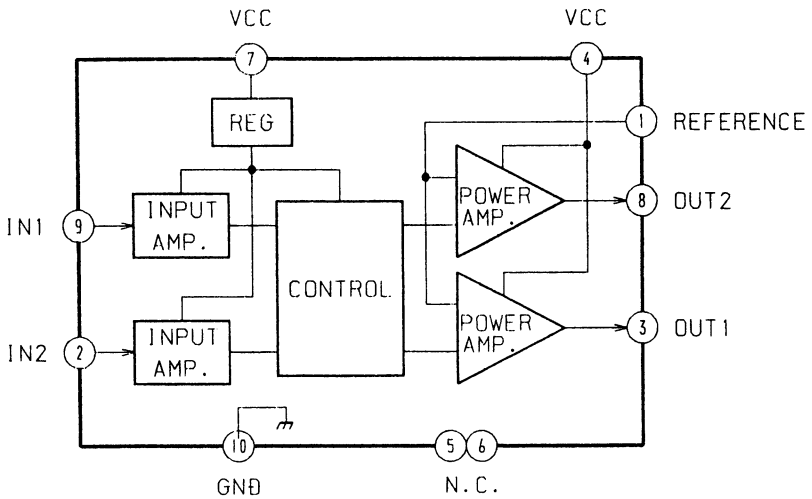

IC201 CXD2500AQ

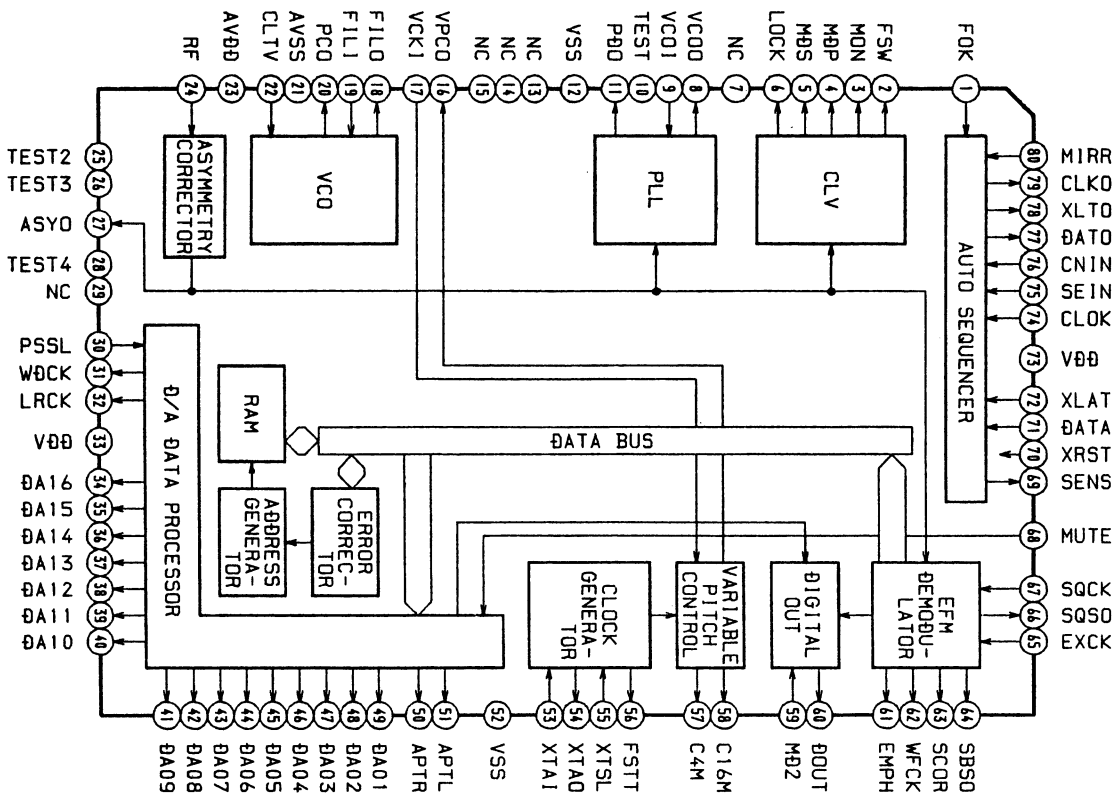

IC502 M5293L

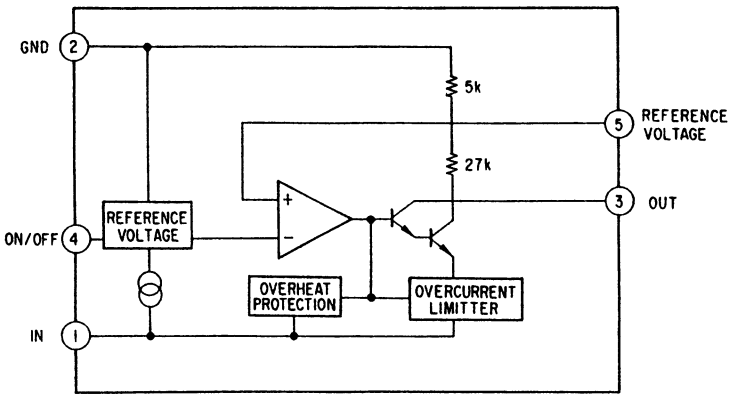

IC503 LA5601

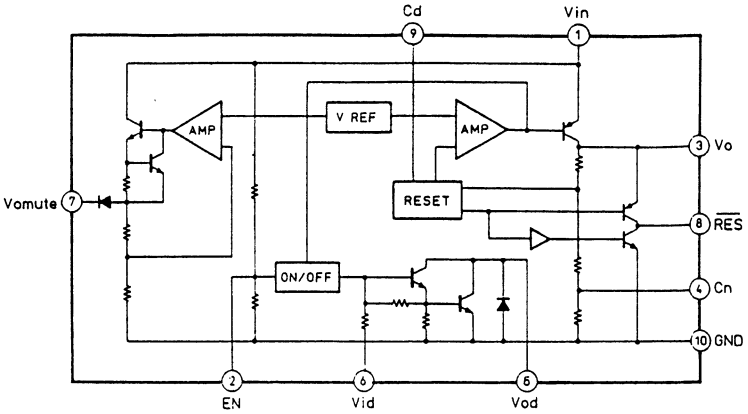

3-7. PIN FUNCTION OF IC202 AND IC401

- **IC202 CD System Controller (μPD75116GF-760-3BE)**

Functions effected by the captioned controller include IC101 (RF signal processing servo) and IC201 (DSP digital filter) loading control in the CD unit, data exchange with IC401 (master controller), audio bus entry, etc.

Pin No.	Pin Name	I/O	Description
1-2		O	Not in use with the model (open).
3	DPCLK	O	Display data transfer clock output to IC401 (display micon)
4-6		O	Not in use with the model (open)
7	$\overline{\text{RESET}}$	I	System reset input. "L": Reset
8	X2	I	Clock input
9	X1	I	Clock input (4 MHz)
10	DPCF SW	O	DEFECT circuit ON/OFF switching output of IC101 (CXA1372Q). It is turned OFF ("H") to focus-search the DISK flaw detection circuit.
11	AMUTE	O	Muting control output. "H": Mute
12	BSOUT	O	Audio bus output
13	AFADJ	I	Test mode input. Various test operations are effected upon "L" after turning ON the POWER.
14	LDON	O	Optical pickup laser diode ON/OFF switching output. "H": ON
15	XLT	O	Serial data latch output to IC201 (CXD2500AQ)
16	CLK	O	Serial data transfer clock output to IC201 (CXD2500AQ)
17	DATA	O	Serial data output to IC201 (CXD2500AQ)
18	MODE	I	Not in use with the model (GND)
19	ADJ	I	Test mode input. Upon "L," GFS checking is disabled while continuously rotating the spindle no matter whether frame synch is issued during PLAY, PAUSE or SEARCH.
20	GFS	I	GFS signal input from IC201 (CXD2500AQ). "L": NG "H": OK
21	FOK	I	Focus OK signal input from IC101 (CXA1372Q). "H": OK
22 - 23		O	Not in use with the model (open)
24	LODOUT	O	Output to rotate M291 (loading motor) in the loading out direction. *1
25	LODIN	O	Output to rotate M291 (loading motor) in the loading in direction. *1
26	Vss	–	Power terminal (GND)
27	$\overline{\text{IN SW}}$	I	S292 (Loading in switch) input
28	$\overline{\text{OUT SW}}$	I	S291 (Loading out switch) input
29	KEY REQ	I	Key data request input from IC401 (display micon)
30	BS IN	I	Audio bus input
31 - 36			Not in use with the model (GND)
37	$\overline{\text{SENS}}$	I	SENS input from IC101 (CXA1372Q) and IC201 (CXD2500AQ)
38	$\overline{\text{TIMER}}$	I	Not in use with the model (pull up)
39	D/F 16BIT	I	IC201 (CXD2500AQ) digital filter mode setting input. It is fixed at 16 bit, 4Fs with the model (pull up).
40		I	Not in use with the model (GND)
41	SUBQ	I	Subcode Q data input from IC201 (CXD2500AQ)
42		O	Not in use with the model (open)
43	SQCLK	O	Subcode Q data reading clock output to IC201 (CXD2500AQ)
44	SCOR	I	Subcode synch S0 + S1 detection input from IC201 (CXD2500AQ)
45 - 56		O	Not in use with the model (open)
57	N.C.	I	Not in use with the model (+5V)
58	VDD	–	Power terminal (+5V)
59 - 62	DPDATA3-0	I/O	Key data input and display data output with IC401 (display micon)
63 - 64		O	Not in use with the model (open)

*1 Loading motor control

	IN	OUT	BRAKE
LODOUT ㉔	L	H	H
LODIN ㉕	H	L	H

• **IC401 Display controller (μPD75206GF-716-3BE)**

In charge of displaying the FL tube and keying in, it exchanges data with the IC202 (CD syscon) in 4-bit parallel mode.

Pin No.	Pin Name	I/O	Description
1	$\overline{\text{RESET}}$	I	System reset input. "L": Reset
2 - 11	G1-10	O	Digital output to the FL tube
12 - 15		O	Not in use with the model (open)
16, 17	l, k	O	FL tube segment output
18	VLOAD	–	Power supply for the FL tube controller (builtin) (-32V)
19	VPRE	–	Power supply for the FL tube predriver (-3.5V)
20 - 25	j - e	O	FL tube segment output
26	VDD	–	Power terminal (+5V)
27, 28	d, c	O	FL tube segment output
29, 30	b, a	O	FL tube segment, key scan output
31, 32		I	Not in use with the model (GND)
33	$\overline{\text{TEST}}$	I	Test mode input. "L": Test mode
34	SELECT	I	Not in use with the model (pull up)
35	BSIN	I	Not in use with the model (pull up)
36	DPCLK	I	Display data transfer clock input from IC202 (CD syscon)
37, 38		I	Not in use with the model (pull up)
39		O	Not in use with the model (pull up)
40, 41		O	Not in use with the model (open)
42	KEY REQ	O	Key data request output to IC202 (CD syscon)
43 - 46	DPDATA0-3	I/O	Key data output and display data input with IC202 (CD syscon)
47 - 50	KEY0-3	I	Key data input
51, 52		I	Not in use with the model (pull up)
53, 54		I	Not in use with the model (GND)
55		O	Not in use with the model (open)
56	X1	I	System clock input (4.19 MHz)
57	X2	I	System clock input
58	Vss	–	Power supply terminal (GND)
59		I	Not in use with the model (GND)
60 - 64		O	Not in use with the model (open)

SECTION 4
EXPLODED VIEWS

NOTE:
- -XX, -X mean standardized parts, so they may have some differences from the original one.
- Color Indication of Appearance Parts
  Example:
  KNOB,BALANCE(WHITE)...(RED)
  ↑ ↑
  Parts color Cabinet's color
- Items marked "*" are not stocked since they are seldom required for routine service. Some delay should be anticipated when ordering these items.
- The mechanical parts with no reference number in the exploded views are not supplied.
- Hardware(# mark) list is given in the last of this parts list.

The components identified by mark ⚠ or dotted line with mark ⚠ are critical for safety.
Replace only with part number specified.

When indicating parts by reference number, please include the board name.

(1) CHASSIS SECTION

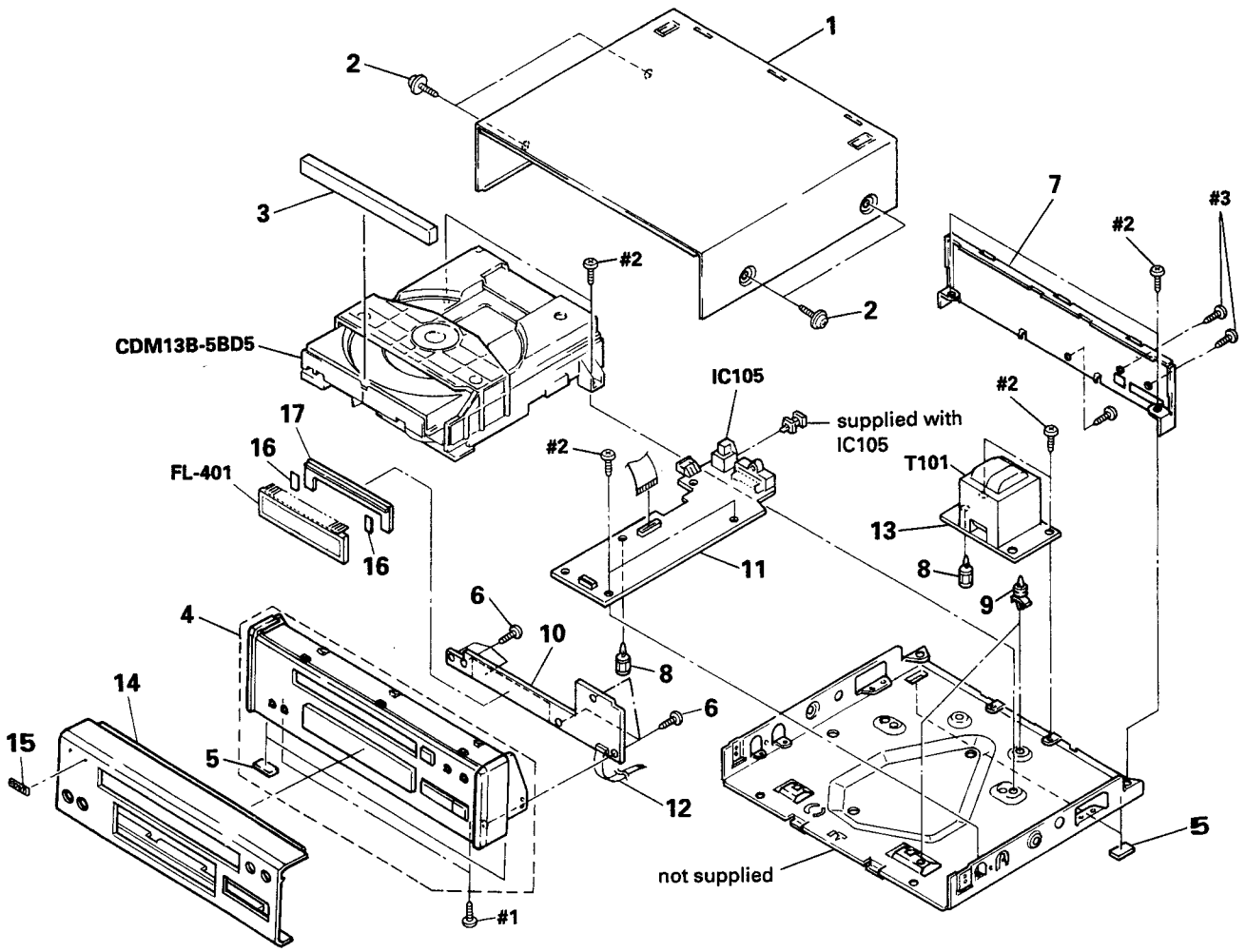

Ref. No.	Part No.	Description	Remarks
1	4-932-844-01	CASE	
2	3-363-099-01	SCREW (CASE +3X8 TP2)	
3	X-4941-527-1	LID (TRAY) ASSY	
4	X-4941-525-1	PANEL ASSY, FRONT	
5	4-930-336-01	FOOT (FELT)	
6	4-928-635-01	SCREW, +BV (2.6X8) TAPPING	
7	* 4-943-175-11	PAENL, BACK	
8	* 3-669-610-00	SPACER	
9	* 4-924-098-11	HOLDER, PC BOARD	
10	* A-4617-802-A	DISPLAY BOARD, COMPLETE	
11	* 1-638-264-11	MAIN BOARD	
12	1-575-001-11	WIRE, FLAT TYPE (12 CORE)	
13	* 1-638-266-11	TRANSFORMER BOARD	
14	4-944-445-01	PANEL, FRONT	
15	4-942-636-01	EMBLEM (NO.3.5), SONY	
16	* 4-932-810-11	CUSHION (FL)	
17	* 4-944-444-01	HOLDER (FL TUBE)	
T101	⚠ 1-450-341-11	TRANSFORMER, POWER	

(2) CD MECHANISM SECTION (CDM13B-5BD5)

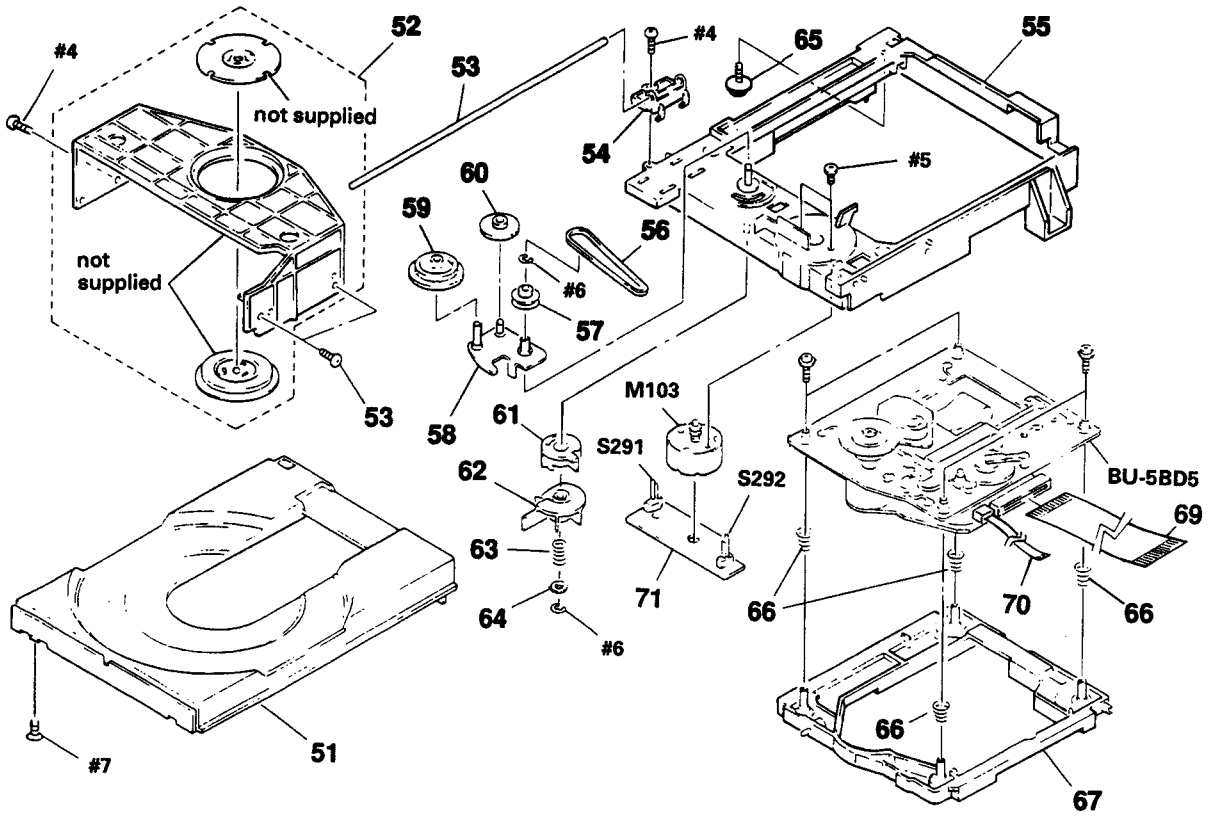

Ref. No.	Part No.	Description	Remarks
51	4-944-012-01	TABLE, DISC	
52	A-4604-752-A	HOLDER (MG) ASSY	
53	4-929-764-01	SHAFT (TABLE GUIDE)	
54	4-944-006-01	BEARING	
55	X-4941-462-1	CHASSIS (MD) ASSY	
56	4-927-649-01	BELT	
57	4-929-724-01	PULLEY (B)	
58	X-4929-703-1	ARM ASSY, SWING	
59	4-927-620-11	GEAR (P)	
60	4-927-628-01	GEAR (C)	
61	4-929-727-01	CAM (A)	
62	4-929-729-01	CAM (B)	
63	3-659-338-00	SPRING, COMPRESSION	
64	4-927-654-01	WASHER (LIMITER)	
65	* 4-917-583-21	BRACKET, YOKE	
66	4-917-541-01	SPRING (B)	
67	4-929-747-01	HOLDER (BU)	
68	4-933-134-01	SCREW (+PTPWH M2.6X6)	
69	1-590-909-21	WIRE, FLAT TYPE (19 CORE)	
70	1-590-530-11	WIRE, FLAT TYPE	
71	* 1-638-308-11	LOADING BOARD	
M103	A-4608-362-A	MOTOR (L) ASSY	

(3) OPTICAL PICK-UP BLOCK (BU-5BD5)

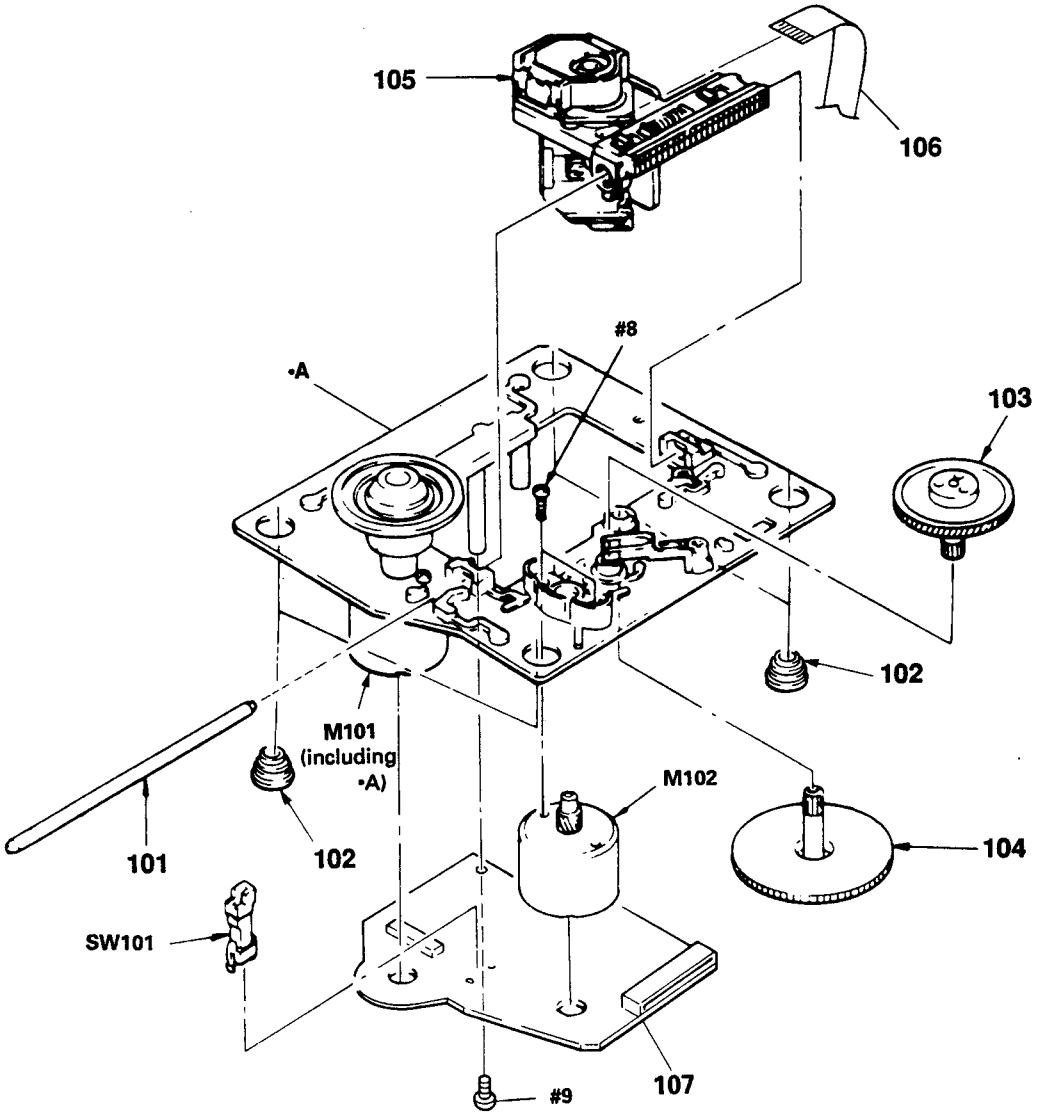

Ref. No.	Part No.	Description	Remarks
101	4-917-565-01	SHAFT, SLED	
102	4-933-126-01	INSULATOR (A)	
103	4-917-567-01	GEAR (M)	
104	4-917-564-01	GEAR (P), FLATNESS	
105	⚠ 8-848-144-11	DEVICE, OPTICAL KSS-240A	
106	1-575-001-11	WIRE, FLAT TYPE (12 CORE)	
107	* A-4617-762-A	BD BOARD, COMPLETE	
M101	X-4917-523-3	ASSY, MOTOR (SPINDLE)	
M102	X-4917-504-1	ASSY, MOTOR (SLED)	
SW101	1-572-085-11	SWITCH, LEAF (LIMIT)	

The components identified by mark ⚠ or dotted line with mark ⚠ are critical for safety.
Replace only with part number specified.

SECTION 5
ELECTRICAL PARTS LIST

BD

NOTE:

The components identified by mark ⚠ or dotted line with mark ⚠ are critical for safety.
Replace only with part number specified.

When indicating parts by reference number, please include the board name.

- Due to standardization, replacements in the parts list may be different from the parts specified in the diagrams or the components used on the set.
- -XX, -X mean standardized parts, so they may have some difference from the original one.
- RESISTORS
  All resistors are in ohms
  METAL : Metal-film resistor
  METAL OXIDE : Metal Oxide-film resistor
  F : nonflammable
- Items marked "*" are not stocked since they are seldom required for routine service. Some delay should be anticipated when ordering these items.
- SEMICONDUCTORS
  In each case, u : µ, for example :
  uA...: µA..., uPA...: µPA...,
  uPB...: µPB..., uPC...: µPC...,
  uPD...: µPD...
- CAPACITORS
  uF :µF
- COILS
  uH : µH

Ref. No.	Part No.	Description			Remarks
	* A-4617-762-A	BD BOARD, COMPLETE			
		**********			
		(CAPACITOR)			
C101	1-163-038-00	CERAMIC CHIP	0.1uF		25V
C102	1-163-989-11	CERAMIC CHIP	0.033uF	10%	25V
C103	1-135-155-21	TANTALUM CHIP	4.7uF	10%	10V
C104	1-163-038-00	CERAMIC CHIP	0.1uF		25V
C105	1-126-607-11	ELECT CHIP	47uF	20%	4V
C106	1-126-607-11	ELECT CHIP	47uF	20%	4V
C107	1-126-607-11	ELECT CHIP	47uF	20%	4V
C108	1-163-038-00	CERAMIC CHIP	0.1uF		25V
C109	1-163-038-00	CERAMIC CHIP	0.1uF		25V
C110	1-163-989-11	CERAMIC CHIP	0.033uF	10%	25V
C111	1-164-346-11	CERAMIC CHIP	1uF		16V
C112	1-164-232-11	CERAMIC CHIP	0.01uF		50V
C113	1-164-232-11	CERAMIC CHIP	0.01uF		50V
C114	1-164-695-11	CERAMIC CHIP	0.0022uF	5%	50V
C115	1-164-695-11	CERAMIC CHIP	0.0022uF	5%	50V
C117	1-163-038-00	CERAMIC CHIP	0.1uF		25V
C118	1-163-038-00	CERAMIC CHIP	0.1uF		25V
C119	1-164-695-11	CERAMIC CHIP	0.0022uF	5%	50V
C120	1-163-989-11	CERAMIC CHIP	0.033uF	10%	25V
C151	1-163-019-00	CERAMIC CHIP	0.0068uF	10%	50V
C152	1-164-346-11	CERAMIC CHIP	1uF		16V
C153	1-163-135-00	CERAMIC CHIP	560PF	5%	50V
C154	1-164-695-11	CERAMIC CHIP	0.0022uF	5%	50V
C155	1-163-023-00	CERAMIC CHIP	0.015uF	5%	50V
C171	1-163-038-00	CERAMIC CHIP	0.1uF		25V
C172	1-163-038-00	CERAMIC CHIP	0.1uF		25V
C173	1-163-038-00	CERAMIC CHIP	0.1uF		25V
C174	1-163-038-00	CERAMIC CHIP	0.1uF		25V
C201	1-163-809-11	CERAMIC CHIP	0.047uF	10%	25V
C202	1-163-145-00	CERAMIC CHIP	0.0015uF	5%	50V
C203	1-163-038-00	CERAMIC CHIP	0.1uF		25V
C204	1-164-346-11	CERAMIC CHIP	1uF		16V
C205	1-164-346-11	CERAMIC CHIP	1uF		16V
C206	1-163-101-00	CERAMIC CHIP	22PF	5%	50V
C207	1-163-101-00	CERAMIC CHIP	22PF	5%	50V
C208	1-164-346-11	CERAMIC CHIP	1uF		16V
C209	1-164-346-11	CERAMIC CHIP	1uF		16V
C210	1-163-038-00	CERAMIC CHIP	0.1uF		25V
		(CONNECTOR)			
CN101	1-580-858-11	SOCKET, CONNECTOR (SMT) 5P			
CN102	1-580-866-11	SOCKET, CONNECTOR (SMT) 12P			
CN103	1-580-872-41	SOCKET, CONNECTOR (SMT) 19P			
		(DIODE)			
D101	8-719-976-96	DIODE	DTZ4.7B		
D201	8-719-988-62	DIODE	1SS355		
		(IC)			
IC101	8-752-050-82	IC	CXA1372Q		
IC102	8-759-823-48	IC	LA6525M		
IC103	8-759-636-20	IC	M54641FP		
IC201	8-752-337-26	IC	CXD2500AQ		
IC202	8-759-153-16	IC	uPD75116GF-760-3BE		
		(TRANSISTOR)			
Q101	8-729-805-45	TRANSISTOR	2SC3395		
Q201	8-729-602-21	TRANSISTOR	2SC4154-F		
		(RESISTOR)			
R101	1-216-097-00	METAL CHIP	100K	5%	1/10W
R102	1-216-097-00	METAL CHIP	100K	5%	1/10W
R103	1-216-091-00	METAL CHIP	56K	5%	1/10W
R104	1-216-099-00	METAL CHIP	120K	5%	1/10W
R105	1-216-069-00	METAL CHIP	6.8K	5%	1/10W
R106	1-216-061-00	METAL CHIP	3.3K	5%	1/10W
R107	1-216-114-00	METAL GLAZE	510K	5%	1/10W
R108	1-216-105-00	METAL CHIP	220K	5%	1/10W
R109	1-216-061-00	METAL CHIP	3.3K	5%	1/10W
R110	1-216-049-00	METAL CHIP	1K	5%	1/10W

DISPLAY MAIN TRANSFORMER LOADING

Ref. No.	Part No.	Description	Remarks
		〈 IC 〉	
IC401	8-759-154-14	IC uPD75206GF-716-3BE	
IC501	8-759-604-86	IC M5F7807L	
IC502	8-759-633-42	IC M5293L	
IC503	8-759-821-93	IC LA5601	
IC504	8-749-922-39	IC GP1F34T	
		〈 JUMPER 〉	
JW401	1-216-295-00	METAL CHIP 0 5% 1/10W	
		〈 TRANSISTOR 〉	
Q501	8-729-805-69	TRANSISTOR 2SA1341	
Q502	8-729-620-06	TRANSISTOR 2SC3052EF	
		〈 RESISTOR 〉	
R401	1-216-089-00	METAL CHIP 47K 5% 1/10W	
R402	1-216-089-00	METAL CHIP 47K 5% 1/10W	
R403	1-216-089-00	METAL CHIP 47K 5% 1/10W	
R404	1-216-089-00	METAL CHIP 47K 5% 1/10W	
R405	1-216-089-00	METAL CHIP 47K 5% 1/10W	
R406	1-216-089-00	METAL CHIP 47K 5% 1/10W	
R407	1-216-089-00	METAL CHIP 47K 5% 1/10W	
R408	1-216-093-00	METAL CHIP 68K 5% 1/10W	
R409	1-216-089-00	METAL CHIP 47K 5% 1/10W	
R410	1-216-089-00	METAL CHIP 47K 5% 1/10W	
R411	1-216-089-00	METAL CHIP 47K 5% 1/10W	
R412	1-216-089-00	METAL CHIP 47K 5% 1/10W	
R413	1-216-089-00	METAL CHIP 47K 5% 1/10W	
R501	1-216-001-00	METAL CHIP 10 5% 1/10W	
R502	1-216-049-00	METAL CHIP 1K 5% 1/10W	
R503	1-216-073-00	METAL CHIP 10K 5% 1/10W	
R504	1-216-073-00	METAL CHIP 10K 5% 1/10W	
R520	1-249-429-11	CARBON 10K 5% 1/4W	
		〈 SWITCH 〉	
S401	1-572-184-11	SWITCH, KEYBOARD (◀◀ |◁◁)	
S402	1-572-184-11	SWITCH, KEYBOARD (▶▶ ▷▷|)	
S403	1-572-184-11	SWITCH, KEYBOARD (▷II)	
S404	1-572-184-11	SWITCH, KEYBOARD (■)	
S405	1-572-184-11	SWITCH, KEYBOARD (OPEN/CLOSE ⏏)	
S406	1-572-184-11	SWITCH, KEYBOARD (EDIT)	
S407	1-572-184-11	SWITCH, KEYBOARD (CHECK)	
		〈 TRANSFORMER 〉	
T101	⚠ 1-450-341-11	TRANSFORMER, POWER	
		〈 CRYSTAL 〉	
X401	1-577-359-21	VIBRATOR, CERAMIC (4.19MHz)	

Ref. No.	Part No.	Description	Remarks
	* 1-638-308-11	LOADING BOARD	
		**********	
		〈 CONNECTOR 〉	
CN201	1-580-918-11	HOUSING, CONNECTOR 5P	
		〈 SWITCH 〉	
S291	1-571-924-11	SWITCH, LEAF (LOAD OUT)	
S292	1-571-924-11	SWITCH, LEAF (LOAD IN)	
		MISCELLANEOUS	
		**********	
12	1-575-001-11	WIRE, FLAT TYPE (12 CORE)	
69	1-590-909-21	WIRE, FLAT TYPE (19 CORE)	
70	1-590-530-11	WIRE, FLAT TYPE	
105	⚠ 8-848-144-11	DEVICE, OPTICAL KSS-240A	
106	1-575-001-11	WIRE, FLAT TYPE (12 CORE)	
M101	X-4917-523-3	ASSY, MOTOR (SPINDLE)	
M102	X-4917-504-1	ASSY, MOTOR (SLED)	
M291	A-4608-362-A	MOTOR (L) ASSY (LOADING)	
		ACCESSORY & PACKING MATERIAL	
		**********	
	4-920-941-01	SHEET (B), PROTECTION	
	* 4-941-548-01	LABEL, CLASS 1	
	* 4-945-079-01	CUSHION	
		HARDWARE LIST	
		**********	
# 1	7-682-547-09	SCREW +BVTT 3X6 (S)	
# 2	7-682-547-04	SCREW +BVTT 3X6 (S)	
# 3	7-685-647-79	SCREW +BVTP 3X10 TYPE2 N-S	
# 4	7-685-646-79	SCREW +BVTP 3X8 TYPE2 N-S	
# 5	7-621-775-10	SCREW +B 2.6X4	
# 6	7-624-105-04	STOP RING 2.3, TYPE -E	
# 7	7-685-234-19	SCREW +KTP 2.6X8 TYPE2NON-SLIT	
# 8	7-621-255-15	SCREW +P 2X3	
# 9	7-685-134-19	SCREW +BTP 2.6X8 TYPE2 N-S	
#10	7-682-548-04	SCREW +BVTT 3X8 (S)	

The components identified by mark ⚠ or dotted line with mark ⚠ are critical for safety.
Replace only with part number specified.

When indicating parts by reference number, please include the board name.

BD DISPLAY MAIN TRANSFORMER

Ref. No.	Part No.	Description				Remarks
R111	1-216-049-00	METAL CHIP	1K	5%	1/10W	
R112	1-216-083-00	METAL CHIP	27K	5%	1/10W	
R113	1-216-071-00	METAL CHIP	8.2K	5%	1/10W	
R114	1-216-105-00	METAL CHIP	220K	5%	1/10W	
R152	1-216-073-00	METAL CHIP	10K	5%	1/10W	
R153	1-216-085-00	METAL CHIP	33K	5%	1/10W	
R154	1-216-085-00	METAL CHIP	33K	5%	1/10W	
R155	1-216-093-00	METAL CHIP	68K	5%	1/10W	
R156	1-216-081-00	METAL CHIP	22K	5%	1/10W	
R157	1-236-427-11	NETWORK, RES	18K			
R159	1-216-079-00	METAL CHIP	18K	5%	1/10W	
R160	1-216-049-00	METAL CHIP	1K	5%	1/10W	
R171	1-216-001-00	METAL CHIP	10	5%	1/10W	
R172	1-216-001-00	METAL CHIP	10	5%	1/10W	
R173	1-216-001-00	METAL CHIP	10	5%	1/10W	
R174	1-216-001-00	METAL CHIP	10	5%	1/10W	
R201	1-216-061-00	METAL CHIP	3.3K	5%	1/10W	
R202	1-216-073-00	METAL CHIP	10K	5%	1/10W	
R203	1-216-061-00	METAL CHIP	3.3K	5%	1/10W	
R204	1-216-049-00	METAL CHIP	1K	5%	1/10W	
R205	1-216-089-00	METAL CHIP	47K	5%	1/10W	
R208	1-216-049-00	METAL CHIP	1K	5%	1/10W	
R209	1-216-081-00	METAL CHIP	22K	5%	1/10W	
R210	1-236-427-11	NETWORK, RES	18K			
R212	1-236-427-11	NETWORK, RES	18K			
R214	1-239-039-11	NETWORK, RES	22K			
R218	1-216-065-00	METAL CHIP	4.7K	5%	1/10W	
R219	1-216-073-00	METAL CHIP	10K	5%	1/10W	
R220	1-216-001-00	METAL CHIP	10	5%	1/10W	
R222	1-236-427-11	NETWORK, RES	18K			
R223	1-216-081-00	METAL CHIP	22K	5%	1/10W	
R224	1-216-081-00	METAL CHIP	22K	5%	1/10W	
R225	1-216-081-00	METAL CHIP	22K	5%	1/10W	
R226	1-216-081-00	METAL CHIP	22K	5%	1/10W	
		(VARIABLE RESISTOR)				
RV101	1-241-395-11	RES, ADJ, METAL GLAZE 10K				
RV102	1-241-395-11	RES, ADJ, METAL GLAZE 10K				
		(SWITCH)				
SW101	1-572-085-11	SWITCH, LEAF (LIMIT)				
		(CRYSTAL)				
X201	1-579-280-11	VIBRATOR, CRYSTAL (16.9344MHz)				
X202	1-579-216-11	VIBRATOR, CERAMIC (4MHz)				

****

Ref. No.	Part No.	Description				Remarks
	* A-4617-802-A	DISPLAY BOARD, COMPLETE				
		**********				
	* 1-638-264-11	MAIN BOARD				
		**********				
	* 1-638-266-11	TRANSFORMER BOARD				
		**********				
	* 1-573-099-11	HOUSING, CONNECTOR 12P				
	* 4-880-403-11	HEAT SINK				
	* 4-932-810-11	CUSHION (FL)				
		(CAPACITOR)				
C115	1-164-232-11	CERAMIC CHIP	0.01uF		50V	
C116	1-164-232-11	CERAMIC CHIP	0.01uF		50V	
C401	1-163-038-00	CERAMIC CHIP	0.1uF		25V	
C402	1-163-035-00	CERAMIC CHIP	0.047uF		50V	
C403	1-164-346-11	CERAMIC CHIP	1uF		16V	
C404	1-163-009-11	CERAMIC CHIP	0.001uF	10%	50V	
C501	1-126-939-11	ELECT	10000uF	20%	16V	
C502	1-124-907-11	ELECT	10uF	20%	50V	
C503	1-124-903-11	ELECT	1uF	20%	50V	
C504	1-164-346-11	CERAMIC CHIP	1uF		16V	
C505	1-126-063-11	ELECT	100uF	20%	63V	
C506	1-124-907-11	ELECT	10uF	20%	50V	
C507	1-124-903-11	ELECT	1uF	20%	50V	
C510	1-163-009-11	CERAMIC CHIP	0.001uF	10%	50V	
C513	1-136-165-00	FILM	0.1uF	5%	50V	
C521	1-126-176-11	ELECT	220uF	20%	10V	
C522	1-124-927-11	ELECT	4.7uF	20%	50V	
C524	1-136-165-00	FILM	0.1uF	5%	50V	
		(CONNECTOR)				
CN401	* 1-573-098-11	HOUSING, CONNECTOR 12P				
CN501	* 1-569-624-11	SOCKET, CONNECTOR 17P				
CN502	1-568-662-11	CONNECTOR, BOARD TO BOARD 6P				
CN601	* 1-573-149-11	SOCKET, CONNECTOR 19P				
CN901	1-568-668-11	CONNECTOR, BOARD TO BOARD 6P				
		(DIODE)				
D401	8-719-106-36	DIODE	RD8.2M-B3			
D402	8-719-104-34	DIODE	1S2836			
D403	8-719-104-34	DIODE	1S2836			
D501	8-719-210-39	DIODE	EC10QS-04			
D502	8-719-210-39	DIODE	EC10QS-04			
D503	8-719-210-33	DIODE	EC10DS2			
D505	8-719-106-17	DIODE	RD6.8M-B2			
D510	8-719-104-34	DIODE	1S2836			
		(FLUORESCENT TUBE)				
FL401	1-519-652-11	INDICATOR TUBE, FLUORESCENT				

When indicating parts by reference number, please include the board name.

ST-H3600/H6600

SERVICE MANUAL

AEP Model
UK Model

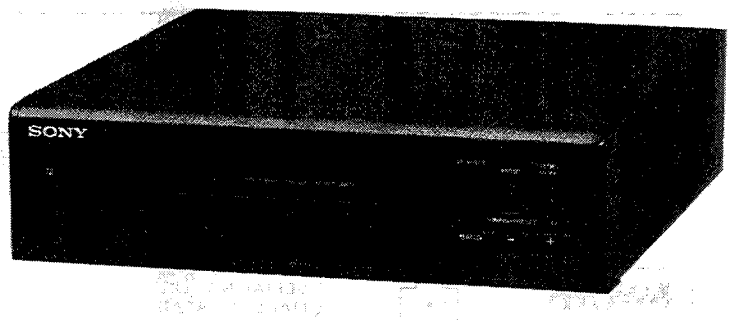

ST-H3600 and ST-H6600 are the tuner section in MHC-2600/3600 and MHC-5600/6600 respectively.

Photo : ST-H6600

SPECIFICATIONS

System	FM stereo, FM/AM superheterodyne tuner
FM tuner section	
Tuning range	87.5 — 108 MHz
Antenna terminals	75 ohm unbalanced
Intermediate frequency	10.7 MHz
AM tuner section	
Tuning range	For AEP, UK models MW: 531 — 1,602 kHz LW: 153 — 279 kHz For Italian model MW: 522 — 1,611 kHz LW: 144 — 288 kHz
Antenna	AM loop antenna. External antenna terminals
Intermediate frequency	450 kHz

Note :
G : Germany model
IT : Italian model

TABLE OF CONTENTS

FM STEREO/FM-AM TUNER

SONY®

MODEL IDENTIFICATION

– BACK PANEL –

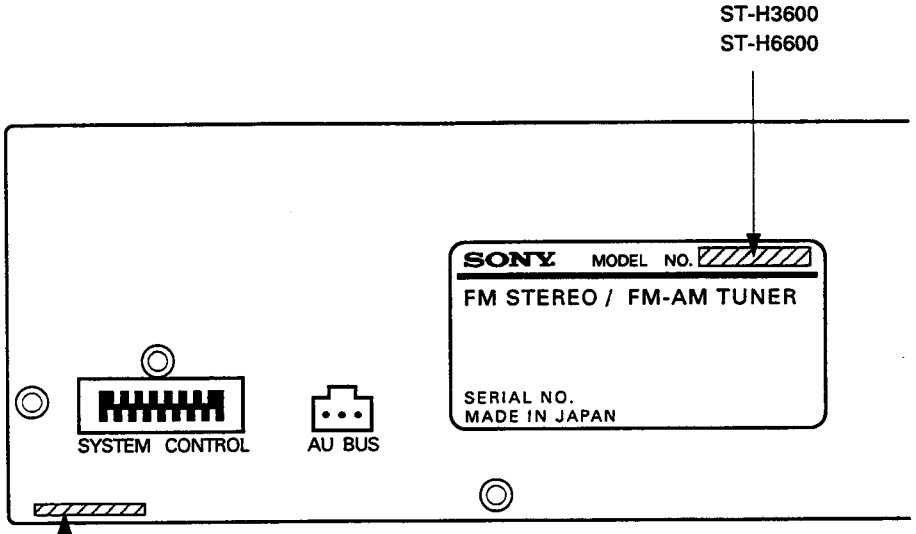

4-942-893-51. AE ..... ST-H3600 AEP,UK model
4-942-893-81. AE4 ..... ST-H3600 G model
4-942-893-91. IT ..... ST-H3600 IT model

4-942-893-01. AE ..... ST-H6600 AEP model
4-942-893-31. AE4 ..... ST-H6600 G model
4-942-893-41. IT ..... ST-H6600 IT model

SECTION 1
SERVICING NOTES

SUPPLY OF POWER DURING SERVICES

Because the equipment is not provided with any power supply, it is operated with power supplied from the amplifier TA-H2600, H3600, H5600 or H6600 used in the series. The equipment requires the following 4 types of voltages. Therefore, connect the equipment to TA-H2600, H3600, H5600 or H6600 for services such as repairing with power supplied, because it will be too complicated to supply these voltages individually.

VOLTAGE	MAJOR CIRCUIT IN USE
AC 3.9V	FL tube filament voltage (VF)
DC -24V	Display controller IC701 grid voltage (VG)
DC -5.6V	Display controller IC701, Tuner PLL IC81 Vcc
DC 12V	Tuner RF, FM/AM DET IC21 Vcc

SERVICE MODE TO CHECK TIMER ON-OFF

It is possible to check whether the timer normally functions while being connected with an amplifier.

(1) Connect the equipment to the amplifier TA-H2600, H3600, H5600 or H6600 and set the POWER switch to STANDBY state.
(2) Set the time of the tuner to any time.
(3) Press 3 switches "BAND","-" and "MEMORY/NEXT" at the same time (while pressing "BAND" and "-" beforehand, finally press "MEMORY/NEXT")

(4) FL display tube

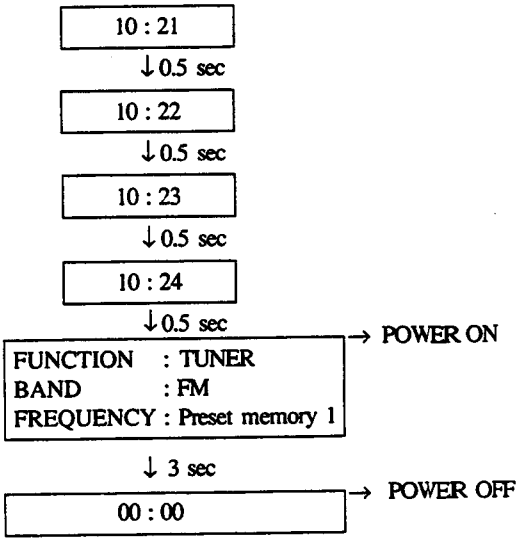

(5) Completion

Note : After completion of the checking above, data preset in the memory IC702 is erased while resetting the memory to the following state upon shipping from the works, so be sure to recover the same frequency as that before the repairing.

• **Frequencies initially preset**

	AEP/UK model			G/IT model		
	FM	MW	LW	FM	MW	LW
1	87.5MHz	531KHz	153KHz	87.5MHz	522KHz	144KHz
2	88.0MHz	603KHz	162KHz	88.0MHz	603KHz	162KHz
3	98.0MHz	999KHz	216KHz	98.0MHz	999KHz	216KHz
4	100.0MHz	1404KHz	270KHz	100.0MHz	1404KHz	270KHz
5	108.0MHz	1602KHz	279KHz	108.0MHz	1611KHz	288KHz
6 - 20	*1	*2	*2	*1	*2	*2

*1 The same frequency values are set for the preset memory No.6 - No.10, No.11 - No.15 and No.16 - No.20 as for No.1 - No.5 respectively.
*2 The same frequency values are set for the preset menory No.6 -No.10 as for No.1 - No.5.

SERVICE MODE TO CHECK FL TUBE AND KEY INPUT

It is possible to check FL tube all ON grid, segment and key input.

(1) Connect the equipment to the amplifier TA-H2600, H3600, H5600 or H6600 and remove the AC cord of the amplifier out of the AC receptacle.

(2) While pressing 3 switches "BAND","-" and "MEMORY/NEXT" at the same time, insert the AC cord of the amplifier into the receptacle.

(3) Thus, all FL display tubes light up. By pressing "+" or "TIMER CONTROL" in this state, partial lighting or key input checking, respectively, is effected.

Partial lighting: Indicates the mode to check complete connection between the grid and segment of the FL tube. The condition is normal when the following indication is effected. By pressing "+" or "-" in the partial lighting mode, the status returns to key input checking or all ON in (3), respectively.

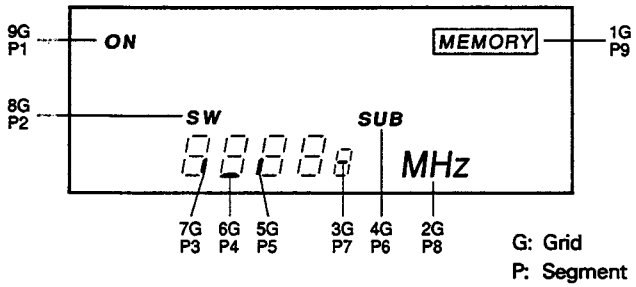

Key input checking: Shows the mode to check key input into 9 keys on the front panel. "0" is indicated at first and, every time a different key is pressed, indicated number is increased. After completion of pressing all 9 keys, "PASS" is indicated. (Once a key is pressed, pressing it again is rejected.)

(4) After the completion of the checking, the equipment recovers normal operation by once removing the AC cord and inserting it again into the AC receptacle.

HOW TO FORCEFULLY TURN POWER ON

The equipment is not provided with any power switch. Therefore, power ON/OFF is controlled in the amplifier side. However, even without an amplifier, power is supplyable to the equipment according to the following methods provided any type of power is available, e.g. using a special jig or supplying the 4 types of voltages individually.

(When power is supplied from the amplifier, power is turned ON only for the tuner.)

(1) Supply power.

(2) Press 3 switches "STEREO/MONO","-" and "MEMORY/NEXT" at the same time.
(Press "STEREO/MONO" and "-" beforehand, and finally press "MEMORY/NEXT.")

However, when the equipment is started up by the methods above, service modes TIMER ON/OFF and FL tube and key input checking are not operable.

Clock Setting

Setting the Clock

Example: Set to 9:25 in the morning.

1 **Press CLOCK SET.**

2 **Set the hour with the – or + button.**

3 **Press MEMORY/NEXT.**

4 **Set the minute with the – or + button.**

5 **Press MEMORY/NEXT.**
The clock starts operating.

Information on the time

The European and U.K. model shows the time in 24-hour cycle.
The model for other countries shows the time in 12-hour cycle.
AM 12:00 = midnight
PM 12:00 = noon

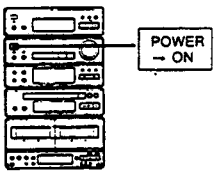

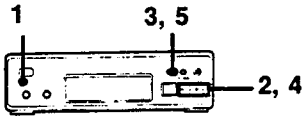

1

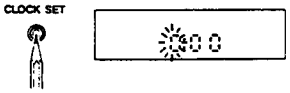

2

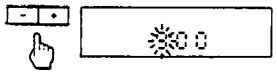

3

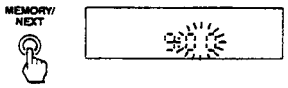

4

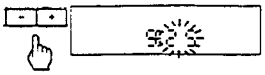

5

When a power interruption occurs
If the power is recovered within several hours, there is no need to reset the clock, timer, and Wake Up Volume settings. If the power interruption is long, all the above settings are erased, and "0:00" ("AM 12:00") will flash on the display.

To change the frequency display to the time display
Press CLOCK DISP. on the remote commander. Press it again to change to the frequency display.

Radio

The automatic tuning allows you to receive stations whose signal is strong enough. When the signal is too weak, use the manual tuning.

Tuning in Automatically

1 **Press BAND repeatedly until the desired band appears.**
As you press BAND, the band changes as follows:
European and U.K. model:
FM → MW → LW
Model for other countries:
FM → SW → MW

2 **Press MODE so that the TUNING indicator lights up.**

3 **Keep – or + depressed for more than 1 second.**
"AUTO" appears on the display and the unit tunes in a station automatically.

Repeat step 3 until the desired station appears.

Tuning in Manually

1 **Press BAND repeatedly until the desired band appears.**

2 **Press MODE so that the TUNING indicator lights up.**

3 **Press – or + repeatedly until the desired station appears.**

Indicator on the display

TUNED: Appears when a station of sufficient signal strength is tuned in.
STEREO: Appears when an FM stereo program of sufficient signal strength is received.

Antenna adjustment A

For MW and LW (SW) reception, find the best location for the supplied AM loop antenna.

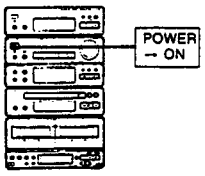

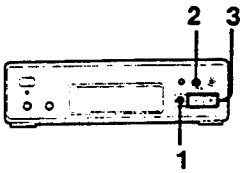

1

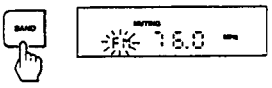

2

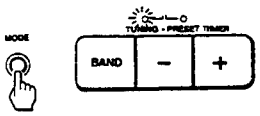

3

A

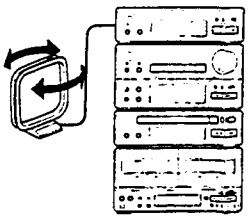

SECTION 2
GENERAL

This section is extracted from instruction manual.

Parts Identification

Refer to the pages indicated in ● for use of the buttons.

Tuner Section A

1. Display window
2. CLOCK SET button 24
3. TIMER SELECT button 117
4. TIMER SET button 119
5. MEMORY/NEXT button 25 60 117
6. MODE button 58 62
7. STEREO/MONO (stereo/monaural) button
8. TUNING PRESET/TIMER –/+ buttons
9. BAND selector 58

A

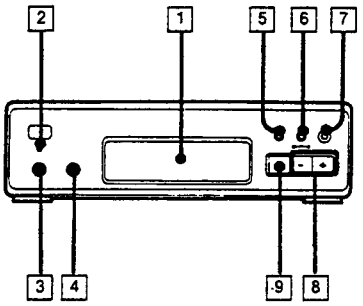

Radio

Storing Stations

You can store up to 20 FM stations and 10 MW stations and 10 LW (SW) stations in a desired sequence, so that you can tune in the stored station directly by entering the preset station number.
This operation is not possible with the remote commander.

1 Tune in the desired station.

2 Press MEMORY/NEXT.
"MEMORY" and the preset station numbers appear on the display.

3 While "MEMORY" is on (for several seconds), press – or + to select a desired preset number.

4 Press MEMORY/NEXT.
"MEMORY" disappears, and the station is stored.

Repeat step 1 to 4 for each station to be stored.

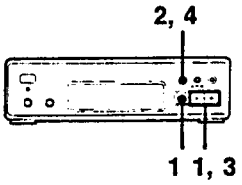

1

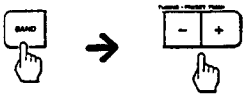

2

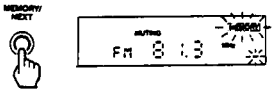

3

4

If you cannot store a station successfully
Press MEMORY/NEXT again so that "MEMORY" appears, and then proceed with steps 3 and 4 above.
Be sure to operate while "MEMORY" is on (about 4 seconds).

When you have selected the wrong preset station number
Press MEMORY/NEXT again and then proceed with the steps 3 and 4.

To change the preset station
Store a desired station at the desired preset number by proceeding with the above steps.
The station previously preset will be erased.
Erasing only is not possible.

Radio

To Tune in a Preset Station

Notes:
- When you use the remote commander for the following operations make sure that the display of the remote commander shows "TUNER" If not, press TUNER on the remote commander.
- You cannot operate the buttons on the lid if the lid is open.

1 Press BAND to select a desired band.

2 Press MODE so that the PRESET indicator lights up.

3 Press – or + (◀ or ▶ on the remote commander) to select the desired preset station number.

To tune in a preset station directly

Possible only with the remote commander.
1 Press BAND to select a desired band.
2 Press the numeric buttons to select the desired preset station number.

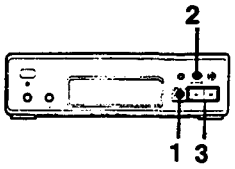

1

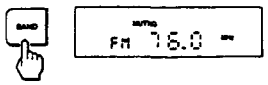

2

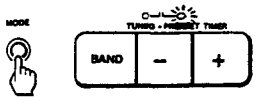

3

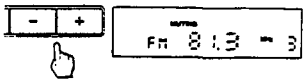

SECTION 3
ELECTRICAL ADJUSTMENTS

PRECAUTIONS IN REPAIRING

If the front end unit fails, it is difficult to repair the inner circuits, so replace the entire front end unit.

FM SECTION

FM DISCRIMINATOR ALIGNMENT (NULL CHECK)

Setting :

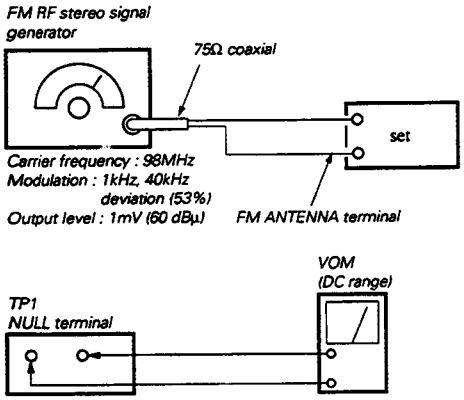

Procedure :

1. Tune the set to 98MHz.
2. Adjust T21 for 0V reading on the VOM.

Note : FM TUNING LEVEL adjustment shoud be made after FM discriminator alignment.

FM TUNING LEVEL ADJUSTMENT

Setting :

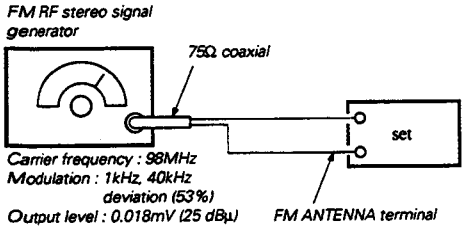

Procedure :

1. Tune the set to 98MHz.
2. Adjust T24 so that the TUNED LED goes on.

FM STEREO SEPARATION ADJUSTMENT

Setting :

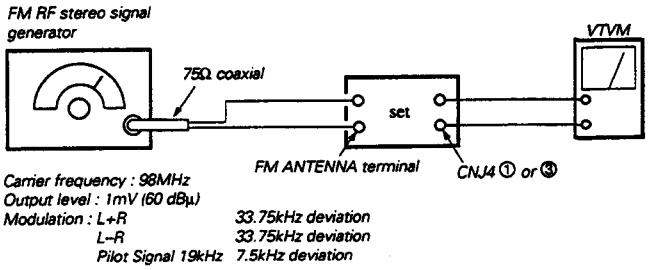

Procedure :
Tune the set to 98MHz.

FM stereo Signal generator Output channel	VTVM connection	VTVM reading (dB)
L-CH	L-CH	Ⓐ
R-CH	L-CH	Ⓑ Adjust RV21 for minimum reading.
R-CH	R-CH	Ⓒ
L-CH	R-CH	Ⓓ Adjust RV21 for minimum reading.

L-CH Stereo separation : Ⓐ – Ⓑ
R-CH Stereo separetion : Ⓒ – Ⓓ

The separations of both channels should be equal.

AM SECTION

AM TUNING LEVEL ADJUSTMENT

Setting :

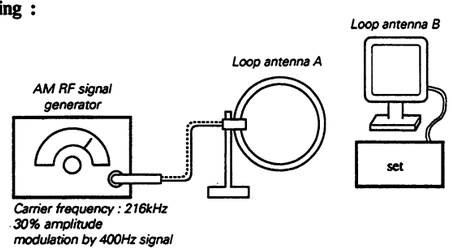

Procedure :

1. Set loop antenna A so that the loop antenna B input level becomes 2.5mV (68dB/m).
2. Tune the set to 216kHz.
3. Adjust the RV22 so that the TUNED LED goes on.

[PARTS ARRANGEMENT DIAGRAM FOR ADJUSTMENT]

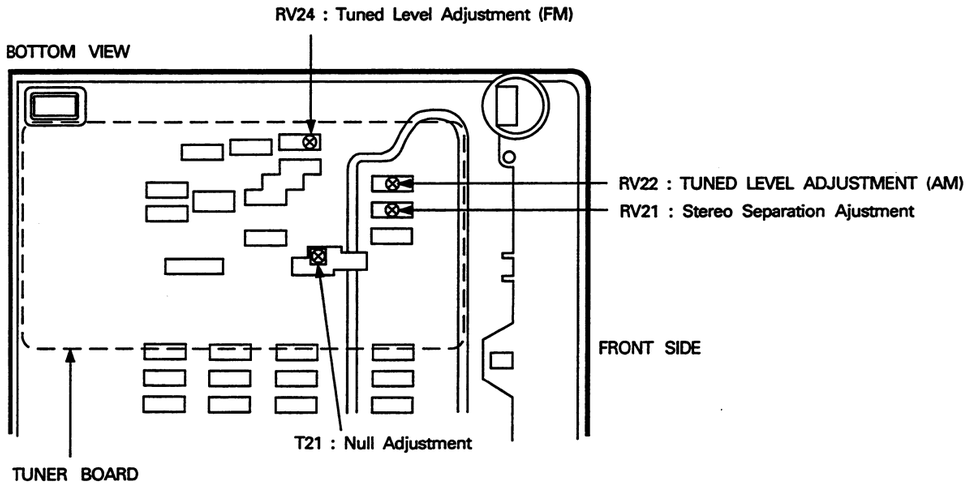

ST-H3600/H6600

SECTION 4
DIAGRAMS

4-1. BLOCK DIAGRAM

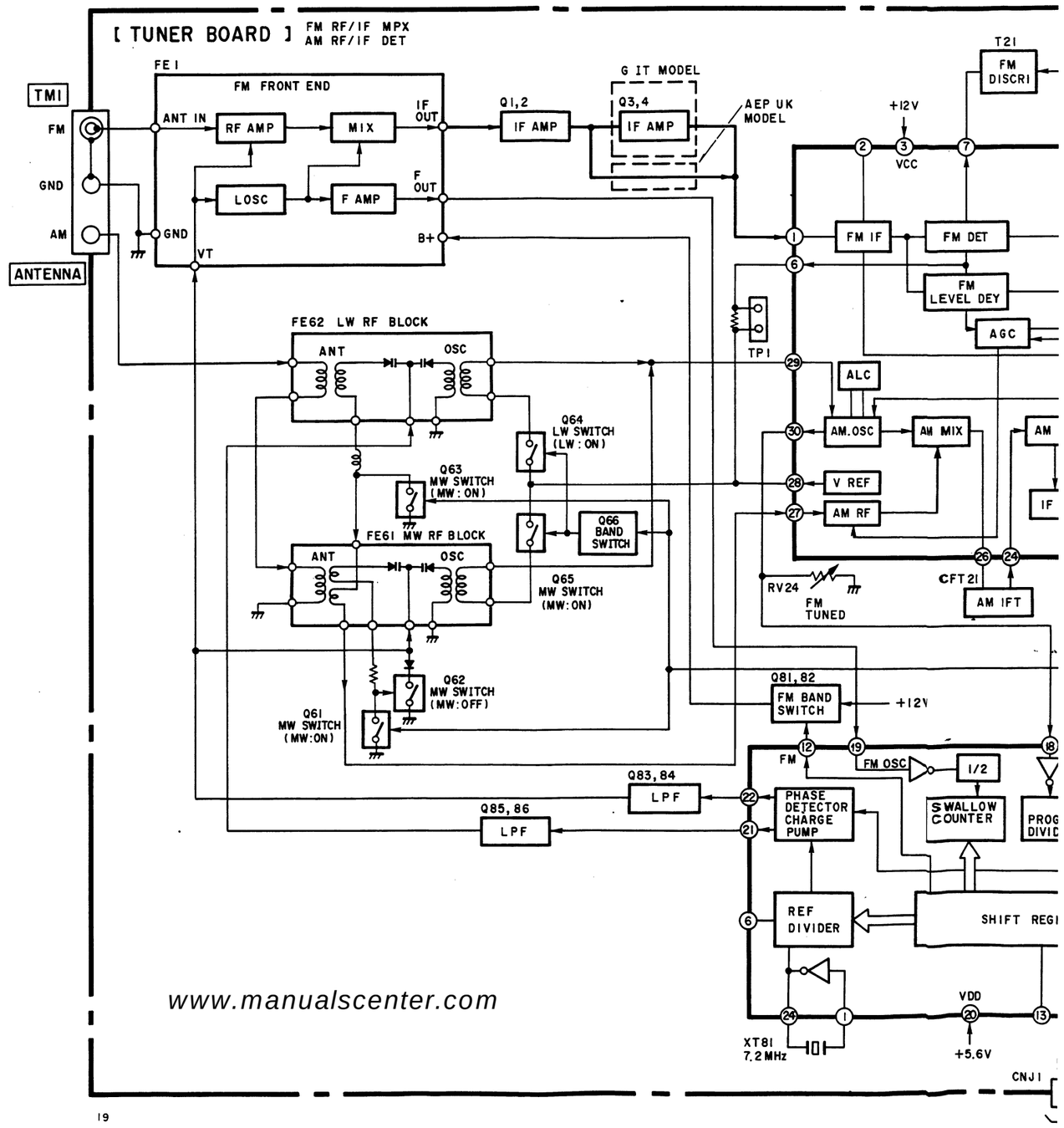

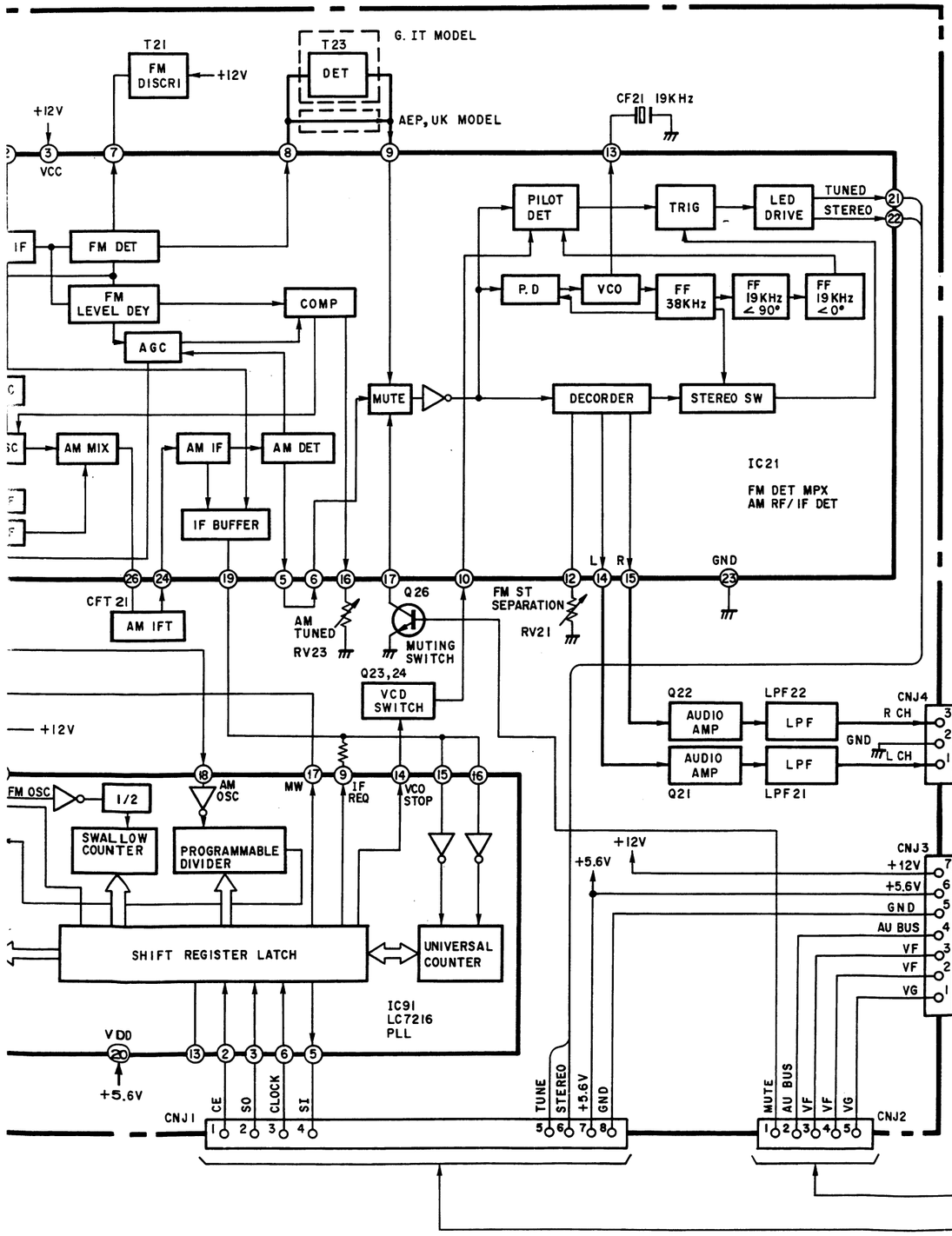
T21
FM DISCRI
+12V
T23
DET
G. IT MODEL
AEP, UK MODEL
CF21 19KHz
VCC
PILOT DET
TRIG
LED DRIVE
TUNED
STEREO
FM DET
FM LEVEL DEY
COMP
AGC
P.D
VCO
FF 38KHz
FF 19KHz ∠90°
FF 19KHz ∠0°
MUTE
DECORDER
STEREO SW
AM MIX
AM IF
AM DET
IF BUFFER
IC21
FM DET MPX
AM RF/IF DET
GND
CFT 21
AM IFT
AM TUNED
RV23
Q26
MUTING SWITCH
FM ST SEPARATION
RV21
Q23,24
VCD SWITCH
Q22
AUDIO AMP
LPF22
LPF
CNJ4
R CH
L CH
Q21
LPF21
FM OSC
1/2
AM OSC
MW
IF REQ
VCO STOP
SWALLOW COUNTER
PROGRAMMABLE DIVIDER
CNJ3
+12V
+5.6V
GND
AU BUS
VF
VG
SHIFT REGISTER LATCH
UNIVERSAL COUNTER
IC91
LC7216
PLL
VDD
CE
SO
CLOCK
SI
TUNE
MUTE
CNJ1
CNJ2

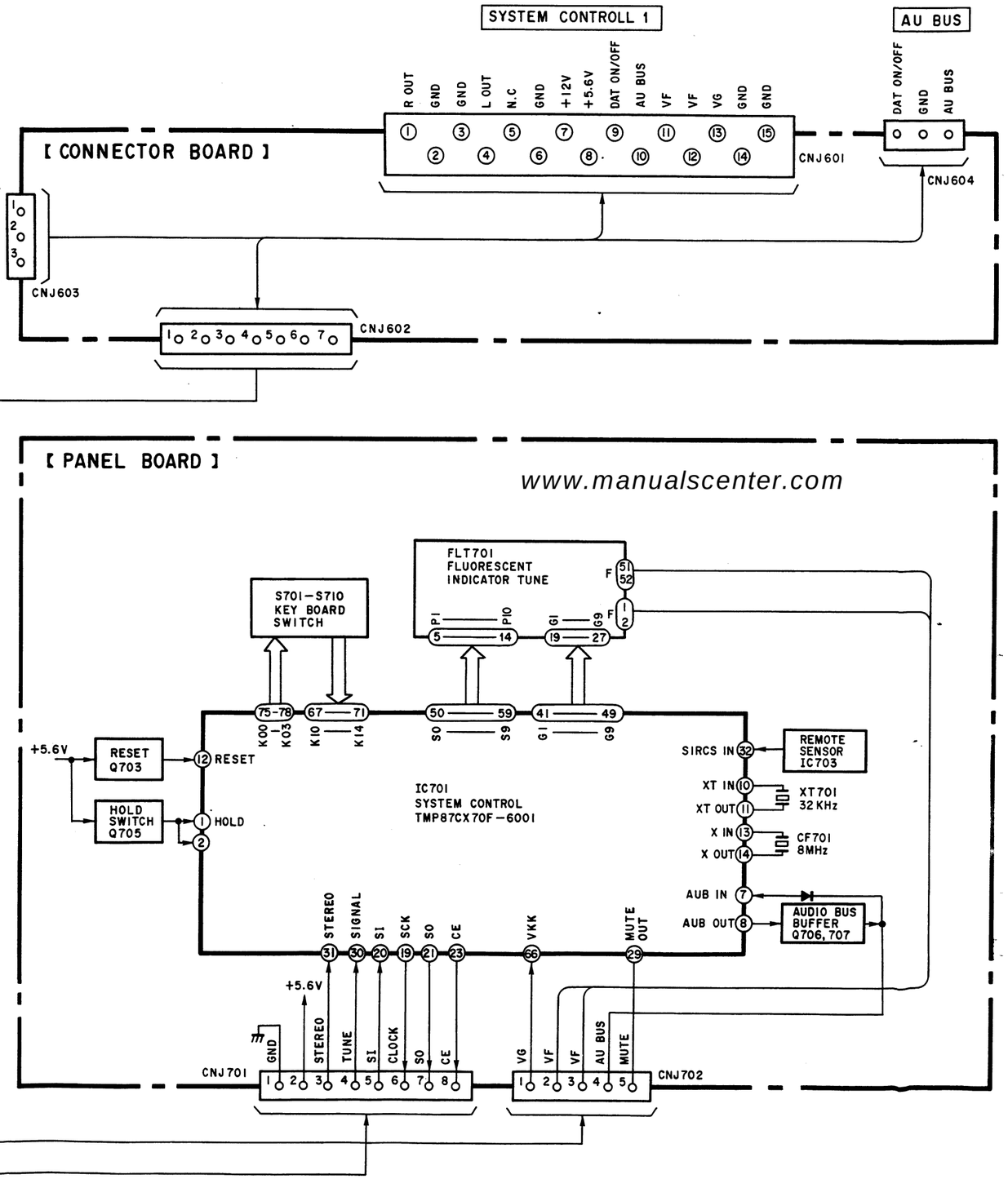
SYSTEM CONTROLL 1
AU BUS
R OUT
GND
L OUT
N.C
+12V
+5.6V
DAT ON/OFF
AU BUS
VF
VG
CNJ601
CNJ604
[CONNECTOR BOARD]
CNJ603
CNJ602
[PANEL BOARD]
www.manualscenter.com
FLT701
FLUORESCENT INDICATOR TUNE
S701-S710
KEY BOARD SWITCH
RESET Q703
HOLD SWITCH Q705
RESET
HOLD
IC701
SYSTEM CONTROL
TMP87CX70F-6001
REMOTE SENSOR IC703
SIRCS IN
XT IN
XT OUT
X IN
X OUT
XT701 32KHz
CF701 8MHz
AUB IN
AUB OUT
AUDIO BUS BUFFER Q706, 707
STEREO
SIGNAL
SI
SCK
SO
CE
VKK
MUTE OUT
GND
TUNE
CLOCK
CNJ701
CNJ702

4-2. SEMICONDUCTOR LEAD LAYOUTS

DTA114ES
DTC114ES
2SC2603-EF
2SC2669-OY
2SC3113-AB

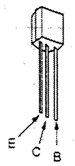

2SK246-GR3

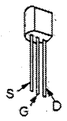

UZ-4.3BSA
1SS120

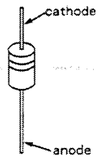

2SA1175-HFE
2SC2785-HFE

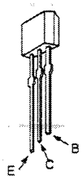

SEL2210S-D

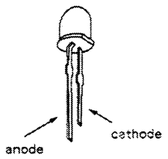

2SA1317-SU
2SC3330-T

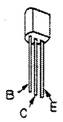

● SEMICONDUCTOR LOCATION

Ref. No	Location	
	H3600	H6600
D61	D – 4	D – 4
D701	G – 4	B – 5
D702	G – 4	B – 2
D707	H – 4	B – 3
D710	G – 2	B – 2
D711	G – 3	B – 3
D712	G – 7	A – 9
D714	G – 9	B – 5
D715	G – 10	B – 9
D716	G – 9	B – 9
D717	G – 8	A – 9
D718	G – 8	B – 2
IC21	C – 5	C – 5
IC81	C – 5	C – 5
IC701	G – 6	B – 6
IC702	G – 9	B – 9
IC703	G – 7	B – 9
Q1	C – 3	C – 3
Q2	C – 4	C – 4
Q3	C – 4	C – 4
Q4	C – 4	C – 4
Q21	C – 7	C – 7
Q22	C – 7	C – 7
Q23	C – 4	C – 4
Q24	C – 4	C – 4
Q26	E – 7	E – 7
Q61	D – 4	D – 4
Q62	D – 4	D – 4
Q63	D – 4	D – 4
Q64	D – 3	D – 3
Q65	D – 5	D – 5
Q66	D – 4	D – 4
Q81	C – 5	C – 5
Q82	C – 5	C – 5
Q701	G – 3	A – 2
Q702	F – 3	A – 2
Q703	G – 8	B – 8
Q705	H – 9	B – 8
Q706	G – 8	B – 9
Q707	G – 9	B – 9

4-3. PRINTED WIRING BOARD – TUNER SECTION –

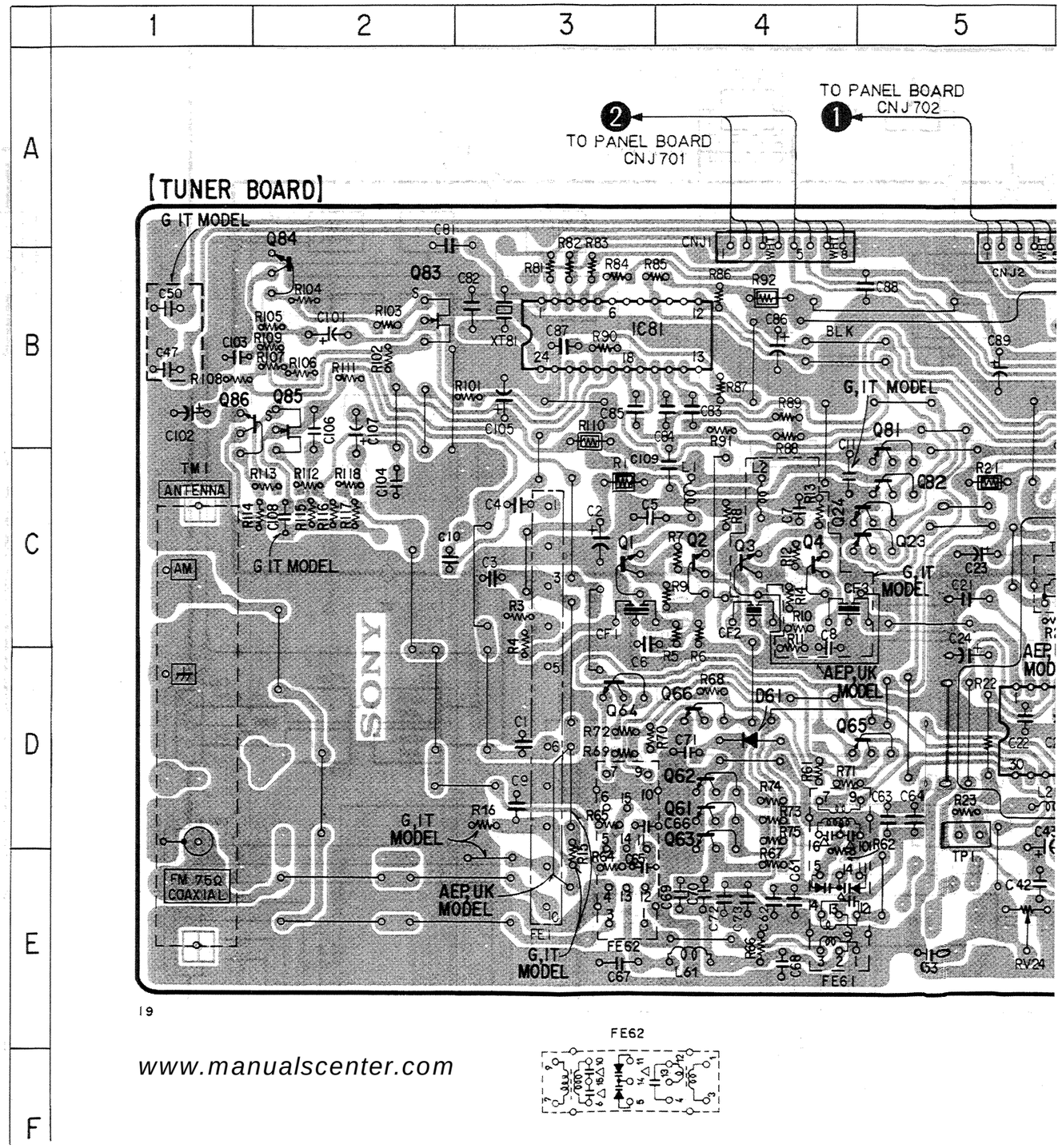

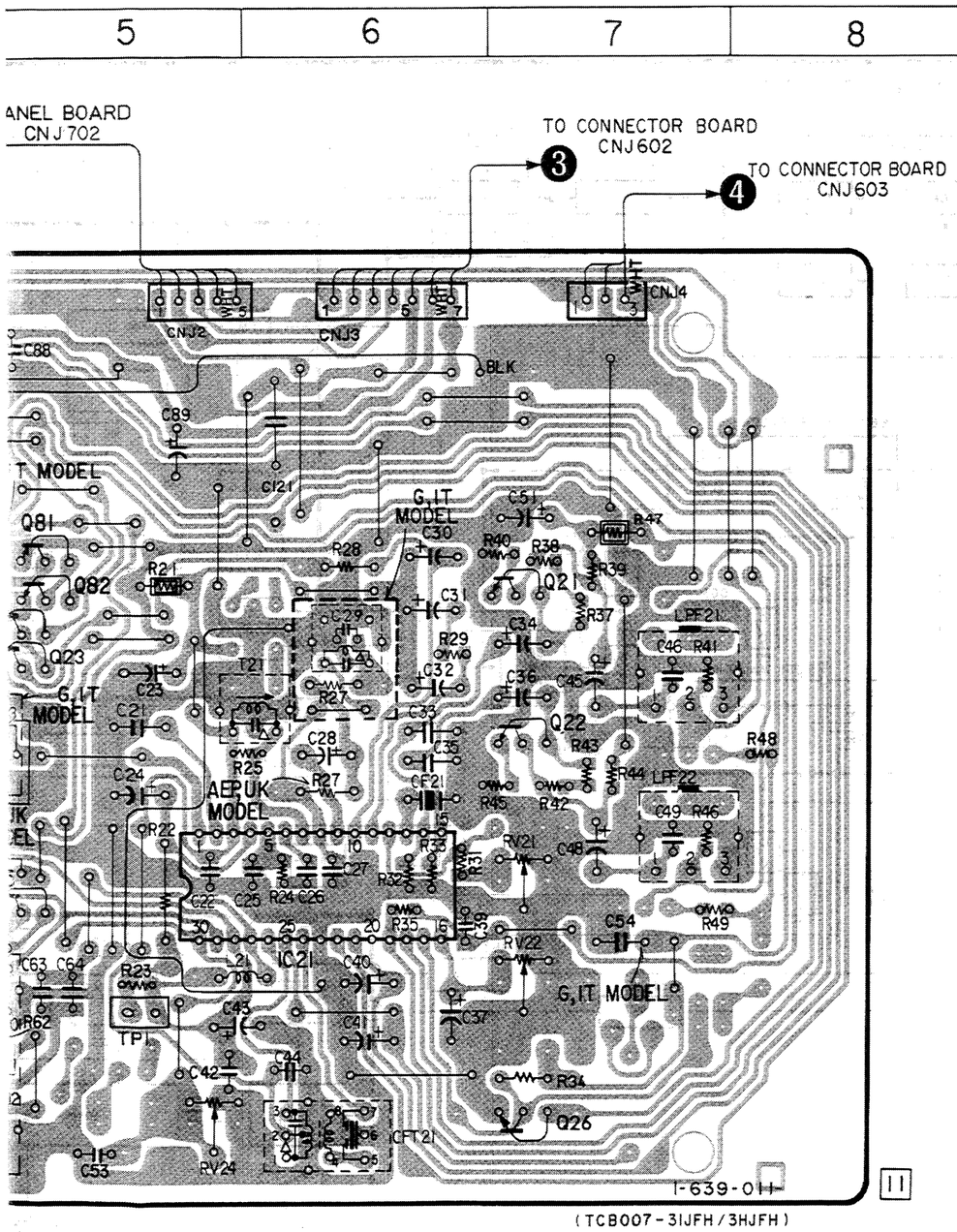

(TCB007-3IJFH/3HJFH)

【CONNECTOR BOARD】

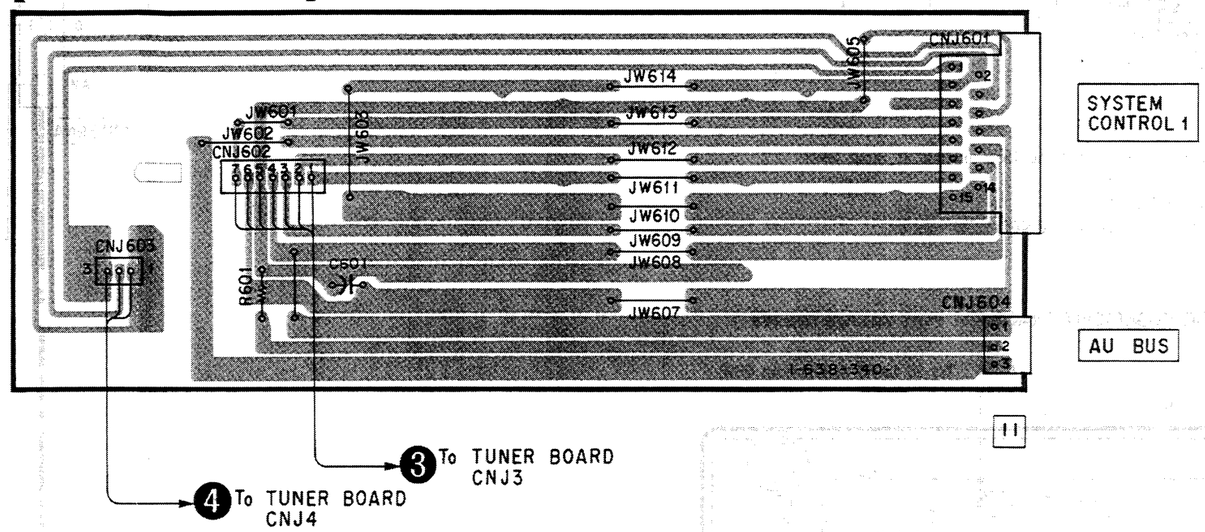

Note for schematic diagram:

- ○——— : indicated a lead wire mounted on the component side.
- ⊡— : indicates side identified with part number.
- All capacitors are in µF unless otherwise noted. pF: µµF 50WV or less are not indicated except for electrolytics and tantalums.
- All resistors are in ohms, 1/4W or less unless otherwise noted.
- △ : internal component.
- ▭ : nonflammable resistor

The components identified by mark ⚠ or dotted line with mark ⚠ are critical for safety.
Replace only with part number specified.

- ▭ : adjustment for repair.
- Voltage and waveforms are dc with respect to ground under no -signal (detuned) conditions.

no mark : FM
( ) : MW
< > : LW

- Voltages are taken with a VOM (input impedance 10MΩ). Voltage variations may be noted due to normal production tolerances.
- Signal path
  ⇨ : FM
- G : Germany Model
- IT : Itarian Model

4-4. SCHEMATIC DIAGRAM – TUNER SECTION –

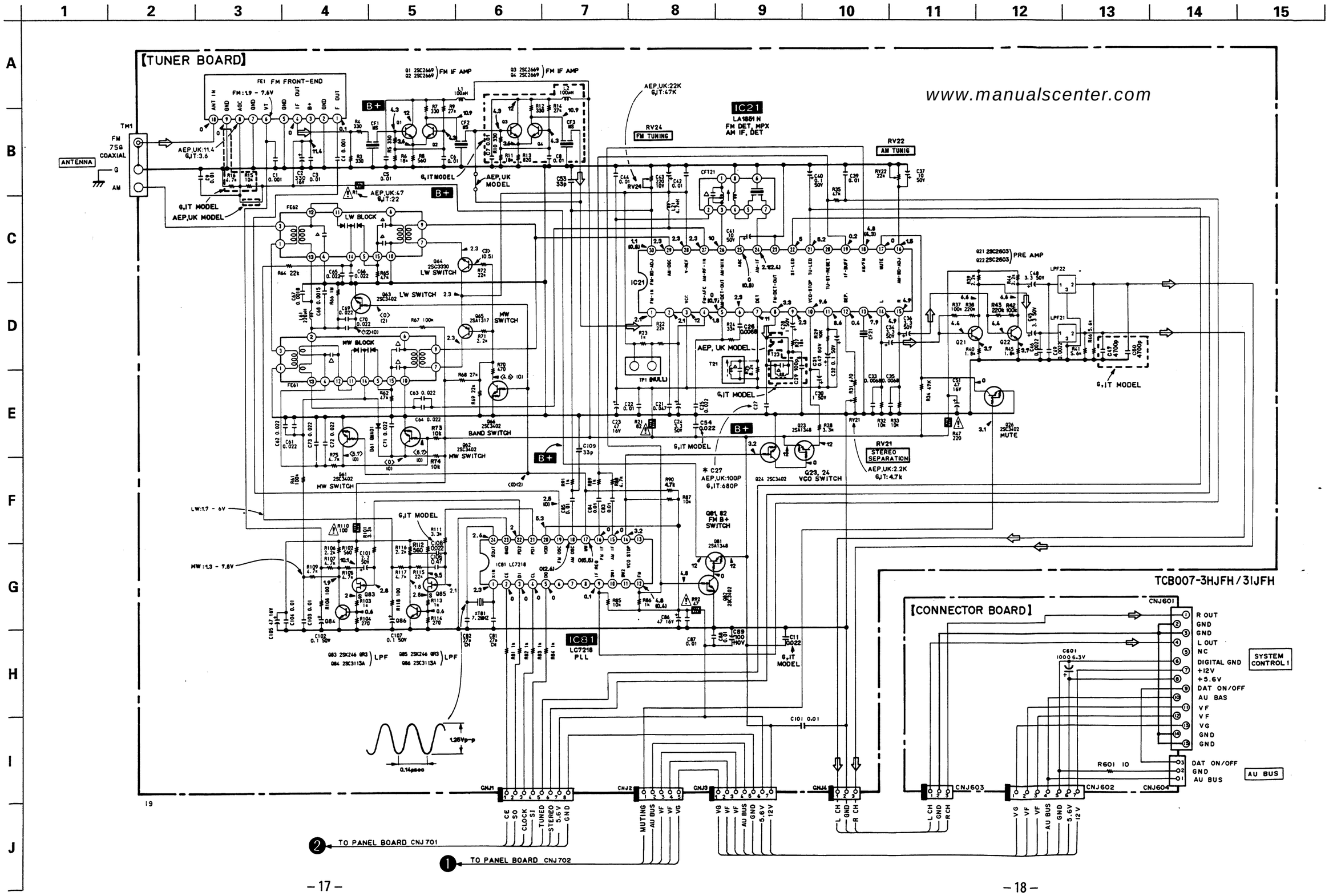

4-5. PRINTED WIRING BOARD – DISPLAY SECTION –

• See page 13 for semiconductor Location.

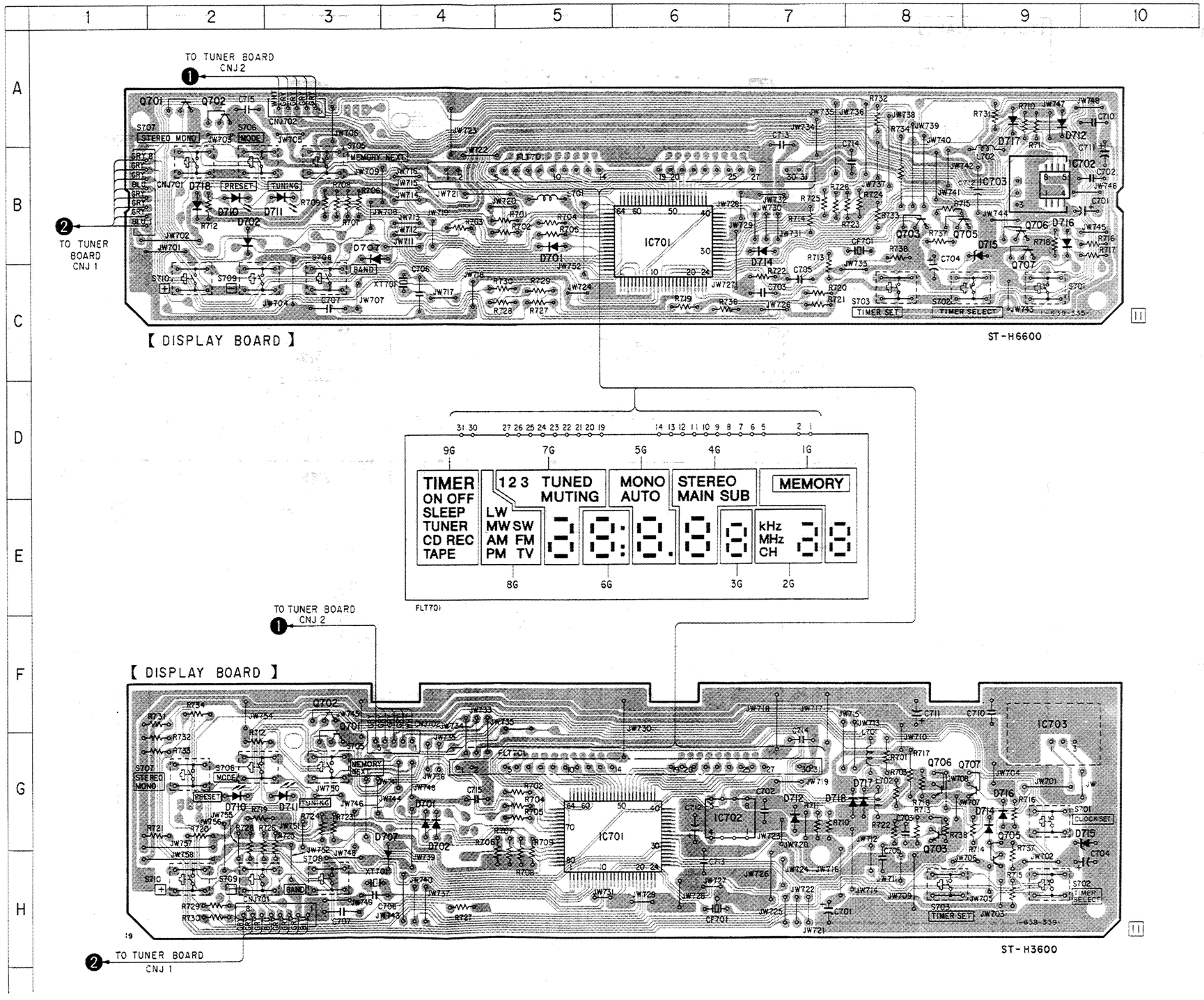

4-6. SCHEMATIC DIAGRAM – DISPLAY SECTION –

• See page 16 for note.

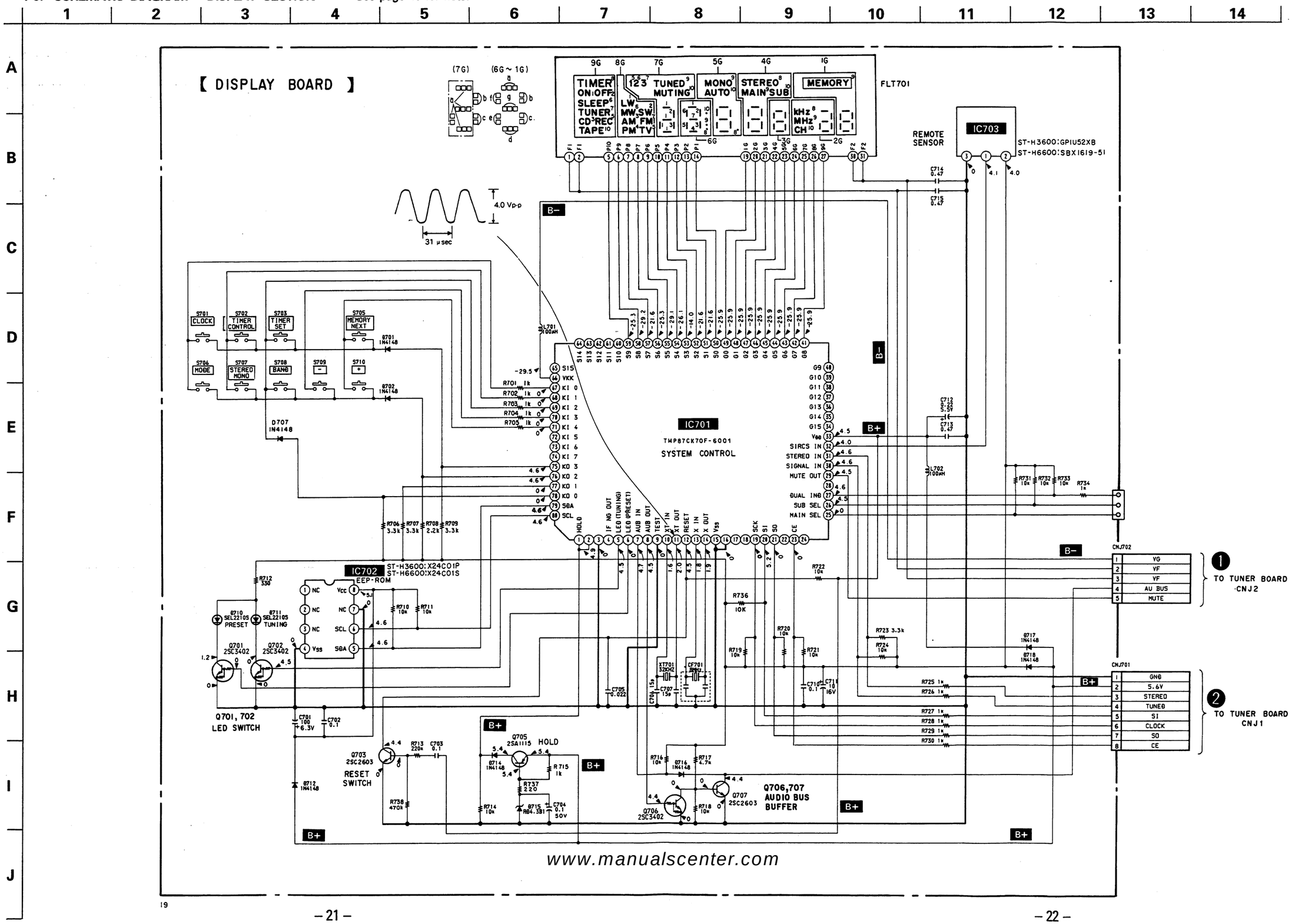

4-7. IC BLOCK DIAGRAMS

IC21 LA1851N

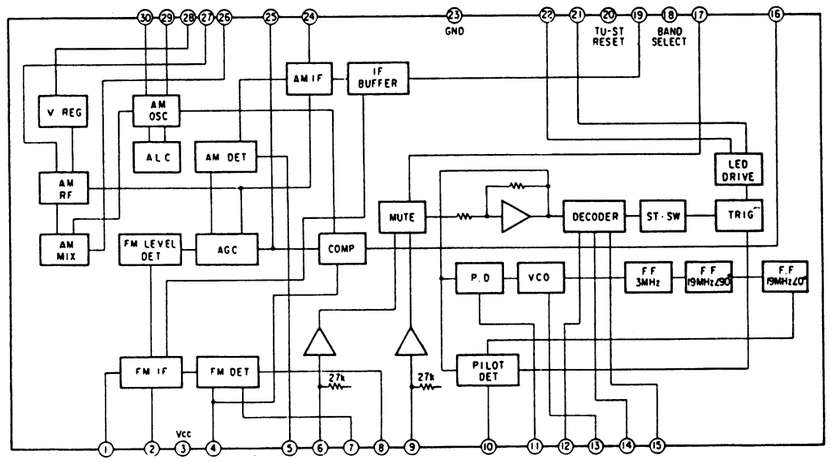

IC81 LC7218

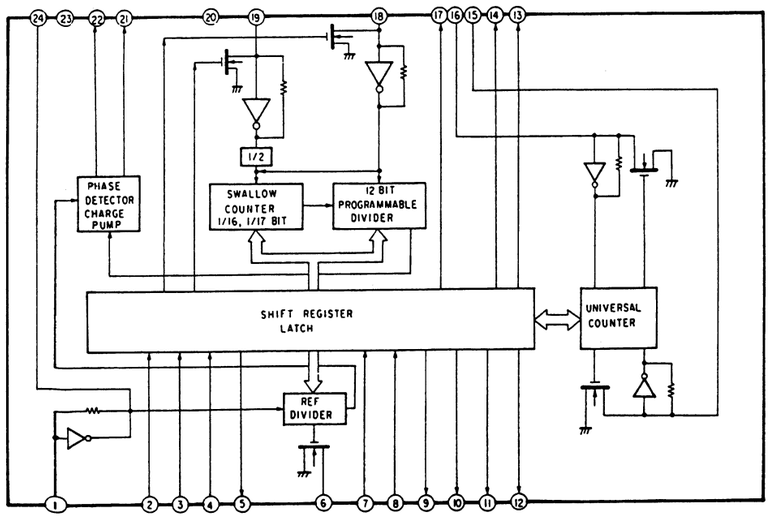

4-8. PIN FUNCTION OF IC701 SYSTEM CONTROLLER (TMP87CK70F-6001)

The terminals work to control tuner section (IC21, 81), FL tube display and reading and writing of IC702 (preset data), etc. according to key input and signal from the remote controller.

PIN No.	PIN NAME	I/O	ACTIVE	PIN FUNCTION
1	HOLD	I	↓	HOLD detecting interrupt terminal
2	HOLD RESET	I	↑	HOLD resetting interrupt terminal
3		I		Not in use
4	IF NGOUT	O	H	IF count NG output
5	LED1	O	H	TUNING LED ON
6	LED2	O	H	PRESET LED ON
7	AUB IN	I	L	AUDIO BUS input
8	AUB OUT	O	L	AUDIO BUS output
9	TEST	I	H	Test terminal
10	XT IN	I		Low frequency oscillator connection terminal (32KHz)
11	XT OUT	O		Low frequency oscillator connection terminal (32KHz)
12	RESET	I	L	Reset signal input
13	X IN	I		High frequency oscillator connection terminal (8MHz)
14	X OUT	O		High frequency oscillator connection terminal (8MHz)
15	VSS			GND
16		I		Not in use
17, 18		O		Not in use
19	SCK	O		PLL serial clock output
20	SI	I		PLL serial data input
21	SO	O		PLL serial data output
22				Not in use
23	CE	O	H	PLL chip enable
24				Not in use
25	MAIN SEL	O	L	Main sound selection terminal (Not in use)
26	SUB SEL	O	L	Sub sound selection terminal (Not in use)
27	DUAL IND	I	L	Sound dual signal detection terminal (Not in use)
28				Not in use
29	MUTE OUT	O	L	MUTING output
30	SIGNAL IN	I	L	TUNED input
31	STEREO IN	I	L	STEREO input
32	SIRCS IN	I	L	SIRCS input
33	VDD			+5V
34 - 40		O		Not in use
41 - 49	G0 - G8	O	H	FL tube digit output
50 - 59	S0 - S9	O	H	FL tube segment output
60 - 65		O	H	Not in use
66	VKK			FL tube driving power supply
67 - 71	KI0 - KI4	I	H	Key input
72		I		Not in use
73, 74				Not in use
75 - 78	KO0 - KO3	O	H	Key output
79	SDA	I/O		Data input/output for EEPROM
80	SCL	O		Clock output for EEPROM

SECTION 5
EXPLODED VIEW

NOTE:
- -XX, -X mean standardized parts, so they may have some differences from the original one.
- Color Indication of Appearance Parts
  Example:
  KNOB,BALANCE(WHITE)...(RED)
  ↑ Parts color ↑ Cabinet's color
- Items marked "*" are not stocked since they are seldom required for routine service. Some delay should be anticipated when ordering these items.
- The mechanical parts with no reference number in the exploded views are not supplied.

The components identified by mark ⚠ or dotted line with mark ⚠ are critical for safety.
Replace only with part number specified.

(1) CHASSIS SECTION

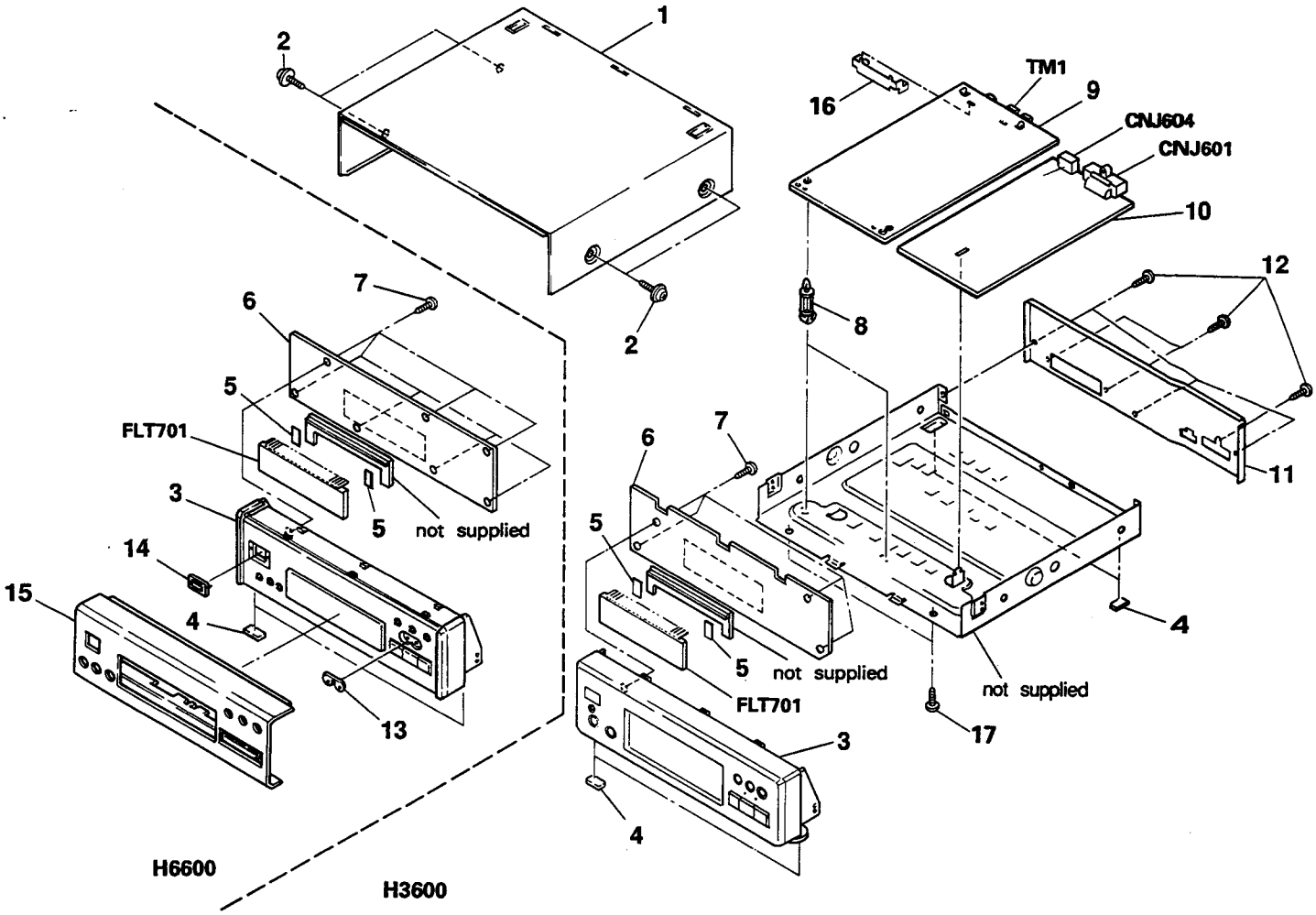

Ref. No.	Part No.	Description	Remarks
1	4-944-423-11	CASE (K206522) (H3600)	
	4-932-844-01	CASE (H6600)	
2	3-363-099-01	SCREW (CASE +3X8 TP2)	
3	X-4941-544-1	PANEL ASSY, ASSY (H3600)	
	X-4942-523-1	PANEL ASSY, ASSY (H6600)	
4	4-930-336-01	FOOT (FELT)	
5	* 4-932-810-11	CUSHION (FL)	
6	* A-4341-562-A	DISPLAY BOARD, COMPLETE (H3600: AEP, UK)	
	* A-4341-563-A	DISPLAY BOARD, COMPLETE (H3600: G, IT)	
	* A-4341-554-A	DISPLAY BOARD, COMPLETE (H6600: AEP, UK)	
	* A-4341-556-A	DISPLAY BOARD, COMPLETE (H6600: G, IT)	
7	7-685-534-19	SCREW +BTP 2.6X8 TYPE2 N-S	
8	* 4-914-008-01	HOLDER, PCB	
9	A-4303-367-A	TUNER BOARD(TCB007-3HJFH), COMPLETE(AEP, UK)	
	A-4303-368-A	TUNER BOARD(TCB007-3IJFH), COMPLETE(G, IT)	
10	1-638-340-11	CONNECTOR BOARD (H3600)	
	1-638-336-11	CONNECTOR BOARD (H6600)	
11	* 4-942-893-51	PANEL, BACK (H3600: AEP, UK)	
	* 4-942-893-81	PANEL, BACK (H3600: G)	
	* 4-942-893-91	PANEL, BACK (H3600: IT)	
	* 4-942-893-01	PANEL, BACK (H6600: AEP, UK)	
	* 4-942-893-31	PANEL, BACK (H6600: G)	
	* 4-942-893-41	PANEL, BACK (H6600: IT)	
12	7-685-647-79	SCREW +BVTP 3X10 TYPE2 N-S	
13	4-944-427-01	INDICATOR (H6600)	
14	4-944-425-01	FILTER (H6600)	
15	4-944-429-11	PANEL (ST), FRONT (H6600)	
16	* 4-924-988-11	PLATE (ST), GROUND	
17	7-682-547-09	SCREW +BVTT 3X6(S) (H6600)	

SECTION 6
ELECTRICAL PARTS LIST

TUNER

NOTE:

The components identified by mark ⚠ or dotted line with mark ⚠ are critical for safety.
Replace only with part number specified.

When indicating parts by reference number, please include the board name.

- Due to standardization, replacements in the parts list may be different from the parts specified in the diagrams or the components used on the set.
- -XX, -X mean standardized parts, so they may have some difference from the original one.
- RESISTORS
  All resistors are in ohms
  METAL : Metal-film resistor
  METAL OXIDE : Metal Oxide-film resistor
  F : nonflammable
- Items marked "*" are not stocked since they are seldom required for routine service. Some delay should be anticipated when ordering these items.
- SEMICONDUCTORS
  In each case, u : µ, for example :
  uA...: µA..., uPA...: µPA...,
  uPB...: µPB..., uPC...: µPC...,
  uPD...: µPD...
- CAPACITORS
  uF :µF
- COILS
  uH : µH

Ref. No.	Part No.	Description				Remarks
	A-4303-367-A	TUNER BOARD(TCB007-3HJFH), COMPLETE(AEP, UK)				
	A-4303-368-A	TUNER BOARD(TCB007-3IJFH), COMPLETE(G, IT)				
		**********				
*	4-324-988-11	PLATE (ST), GROUND				
		(CAPACITOR)				
C1	1-162-294-11	CERAMIC CHIP	0.001uF	20%	25V	
C2	1-124-477-11	ELECT	330uF	20%	16V	
C3	1-163-059-00	CERAMIC MELF	0.01uF	20%	16V	
C4	1-162-294-31	CERAMIC CHIP	0.001uF	20%	25V	
C5	1-163-059-00	CERAMIC MELF	0.01uF	20%	16V	
C6	1-163-059-00	CERAMIC MELF	0.01uF	20%	16V	
C7	1-163-059-00	CERAMIC MELF	0.01uF	20%	16V	(G, IT)
C8	1-163-059-00	CERAMIC MELF	0.01uF	20%	16V	(G, IT)
C9	1-163-059-00	CERAMIC MELF	0.01uF	20%	16V	
C11	1-101-005-00	CERAMIC	0.022uF		50V	(G, IT)
C21	1-101-006-00	CERAMIC	0.047uF		50V	
C22	1-163-059-00	CERAMIC MELF	0.01uF	20%	16V	
C23	1-124-477-11	ELECT	47uF	20%	25V	
C24	1-123-382-00	ELECT	3.3uF	20%	100V	
C25	1-163-063-00	CERAMIC MELF	0.022uF		25V	
C26	1-163-019-00	CERAMIC CHIP	0.0068uF	20%	12V	
C27	1-162-516-11	CERAMIC CHIP	100pF	10%	50V	(AEP, UK)
C27	1-163-007-11	CERAMIC CHIP	680pF	20%	50V	(G, IT)
C28	1-124-903-11	ELECT	1.0uF	20%	50V	
C29	1-162-516-11	CERAMIC CHIP	100pF	10%	50V	(G, IT)
C30	1-124-903-11	ELECT	1.0uF	20%	50V	
C31	1-124-902-00	ELECT	0.47uF	20%	50V	
C32	1-124-463-00	ELECT	0.1uF	20%	50V	
C33	1-130-481-00	MYLAR	0.0068uF	5%	50V	
C34	1-123-382-00	ELECT	3.3uF	20%	100V	
C35	1-130-481-00	MYLAR	0.0068uF	5%	50V	
C36	1-123-382-00	ELECT	3.3uF	20%	100V	
C37	1-124-907-11	ELECT	10uF	20%	50V	
C39	1-163-059-00	CERAMIC MELF	0.01uF	20%	16V	
C40	1-124-463-00	ELECT	0.1uF	20%	50V	
C41	1-124-907-11	ELECT	10uF	20%	50V	
C42	1-163-059-00	CERAMIC MELF	0.01uF	20%	16V	
C43	1-126-176-11	ELECT	220uF	20%	10V	
C44	1-163-059-00	CERAMIC MELF	0.01uF	20%	16V	
C45	1-123-382-00	ELECT	3.3uF	20%	100V	
C46	1-161-375-00	CERAMIC CHIP	0.0022uF	20%	25V	
C47	1-163-170-00	CERAMIC CHIP	0.0047uF	20%	25V	(G, IT)
C48	1-123-382-00	ELECT	3.3uF	20%	100V	
C49	1-161-375-00	CERAMIC CHIP	0.0022uF	20%	25V	
C50	1-163-170-00	CERAMIC CHIP	0.0047uF	20%	25V	(G, IT)
C51	1-124-477-11	ELECT	47uF	20%	25V	
C53	1-163-105-00	CERAMIC CHIP	33pF	5%	50V	
C54	1-101-005-00	CERAMIC	0.022uF		50V	(G, IT)
C61	1-163-063-00	CERAMIC MELF	0.022uF		25V	
C62	1-163-063-00	CERAMIC MELF	0.022uF		25V	
C63	1-163-063-00	CERAMIC MELF	0.022uF		25V	
C64	1-163-063-00	CERAMIC MELF	0.022uF		25V	
C65	1-163-063-00	CERAMIC MELF	0.022uF		25V	
C66	1-163-063-00	CERAMIC MELF	0.022uF		25V	
C67	1-102-120-00	CERAMIC	0.0018uF	10%	50V	
C68	1-163-111-11	CERAMIC CHIP	0.0015uF	20%	25V	
C69	1-163-063-00	CERAMIC MELF	0.022uF		25V	
C70	1-163-063-00	CERAMIC MELF	0.022uF		25V	
C71	1-163-063-00	CERAMIC MELF	0.022uF		25V	
C72	1-163-063-00	CERAMIC MELF	0.022uF		25V	
C73	1-163-063-00	CERAMIC MELF	0.022uF		25V	
C81	1-102-961-00	CERAMIC	27pF	5%	50V	
C82	1-102-961-00	CERAMIC	27pF	5%	50V	
C83	1-163-059-00	CERAMIC MELF	0.01uF	20%	16V	
C84	1-163-059-00	CERAMIC MELF	0.01uF	20%	16V	

TUNER

Ref. No.	Part No.	Description				Remarks
C85	1-163-059-00	CERAMIC MELF	0.01uF	20%	16V	
C86	1-124-477-11	ELECT	47uF	20%	25V	
C87	1-163-059-00	CERAMIC MELF	0.01uF	20%	16V	
C88	1-163-059-00	CERAMIC MELF	0.01uF	20%	16V	
C89	1-124-443-00	ELECT	100uF	20%	10V	
C101	1-124-925-11	ELECT	2.2uF	20%	100V	
C102	1-124-463-00	ELECT	0.1uF	20%	50V	
C103	1-163-059-00	CERAMIC MELF	0.01uF	20%	16V	
C104	1-163-059-00	CERAMIC MELF	0.01uF	20%	16V	
C105	1-124-477-11	ELECT	47uF	20%	25V	
C106	1-136-173-00	FILM	0.47uF	5%	50V	
C107	1-124-463-00	ELECT	0.1uF	20%	50V	
C108	1-163-063-00	CERAMIC MELF	0.022uF		25V	(G, IT)
C109	1-162-211-31	CERAMIC	33pF	5%	50V	
C121	1-161-379-00	CERAMIC	0.01uF	30%	16V	(G, IT)
		(FILTER)				
CF1	1-567-389-11	FILTER, CERAMIC				
CF2	1-567-389-11	FILTER, CERAMIC				
CF3	1-567-389-11	FILTER, CERAMIC (G, IT)				
		(OSCILLATOR)				
CF21	1-577-075-11	OSCILLATOR, CERAMIC (19KHz)				
		(IF TRANSFORMER)				
CFT21	1-404-853-11	TRANSFORMER, IF (CERAMIC FILTER)				
		(CONNECTOR)				
CNJ1	* 1-564-342-11	SOCKET, CONNECTOR 8P				
CNJ2	* 1-564-339-00	PIN, CONNECTOR 5P				
CNJ3	* 1-564-341-11	PIN, CONNECTOR 7P				
CNJ4	* 1-564-337-00	PIN, CONNECTOR 3P				
		(DIODE)				
D61	8-719-912-20	DIODE ISS120				
		(FM FRONT END)				
FE1	1-463-857-11	FRONT END, FM (G, IT)				
FE1	1-463-862-21	FRONT END, FM (AEP, UK)				
		(ENCAPSULATED COMPONENT)				
FE61	1-236-462-11	ENCAPSULATED COMPONENT (MW RF)				
FE62	1-236-463-11	ENCAPSULATED COMPONENT (LW RF)				
		(IC)				
IC21	8-759-821-45	IC LA1851N				
IC81	8-759-820-91	IC LC7218				

Ref. No.	Part No.	Description				Remarks
		(INDUCTOR)				
L1	1-410-645-31	MICRO INDUCTOR 100uH				
L2	1-410-645-31	MICRO INDUCTOR 100uH (G, IT)				
L21	1-407-500-00	MICRO INDUCTOR 4.7mH				
L61	1-410-525-11	MICRO INDUCTOR 220uH				
		(LOW PASS FILTER)				
LPF21	1-235-164-00	FILTER, LOW PASS				
LPF22	1-235-164-00	FILTER, LOW PASS				
		(TRANSISTOR)				
Q1	8-729-230-99	TRANSISTOR 2SC2669-OY				
Q2	8-729-230-99	TRANSISTOR 2SC2669-OY				
Q3	8-129-230-99	TRANSISTOR 2SC2669-OY (G, IT)				
Q4	8-129-230-99	TRANSISTOR 2SC2669-OY (G, IT)				
Q21	8-729-119-78	TRANSISTOR 2SC2785-HFE				
Q22	8-729-119-78	TRANSISTOR 2SC2785-HFE				
Q23	8-729-900-61	TRANSISTOR DTA114ES				
Q24	8-729-900-80	TRANSISTOR DTC114ES				
Q26	8-729-900-80	TRANSISTOR DTC114ES				
Q61	8-729-900-80	TRANSISTOR DTC114ES				
Q62	8-729-900-80	TRANSISTOR DTC114ES				
Q63	8-729-900-80	TRANSISTOR DTC114ES				
Q64	8-729-820-24	TRANSISTOR 2SC3330-T				
Q65	8-729-119-76	TRANSISTOR 2SA1175-HFE				
Q66	8-729-900-80	TRANSISTOR DTC114ES				
Q81	8-729-900-61	TRANSISTOR DTA114ES				
Q82	8-729-900-80	TRANSISTOR DTC114ES				
Q83	8-729-202-67	TRANSISTOR 2SK246GR3				
Q84	8-729-230-93	TRANSISTOR 2SC3113-AB				
Q85	8-729-202-67	TRANSISTOR 2SK246GR3				
Q86	8-729-230-93	TRANSISTOR 2SC3113-AB				
		(RESISTOR)				
R1	⚠ 1-249-397-11	CARBON (SMALL)	22	5%	1/4W F	(G, IT)
R1	⚠ 1-249-401-11	CARBON (SMALL)	47	5%	1/4W F	(AEP, UK)
R3	1-249-329-11	CARBON MELF	330	5%	1/8W	
R4	1-249-329-11	CARBON MELF	330	5%	1/8W	
R5	1-249-329-11	CARBON MELF	330	5%	1/8W	
R6	1-249-350-11	CARBON MELF	18K	5%	1/8W	
R7	1-249-329-11	CARBON MELF	330	5%	1/8W	
R8	1-249-332-11	CARBON MELF	560	5%	1/8W	
R9	1-249-352-11	CARBON MELF	27K	5%	1/8W	
R10	1-249-329-11	CARBON MELF	330	5%	1/8W	(G, IT)
R11	1-249-350-11	CARBON MELF	18K	5%	1/8W	(G, IT)
R12	1-249-329-11	CARBON MELF	330	5%	1/8W	(G, IT)
R13	1-249-334-11	CARBON MELF	820	5%	1/8W	(G, IT)
R14	1-249-352-11	CARBON MELF	27K	5%	1/8W	(G, IT)

The components identified by mark ⚠ or dotted line with mark ⚠ are critical for safety.
Replace only with part number specified.

When indicating parts by reference number, please include the board name.

TUNER CONNECTOR DISPLAY

Ref. No.		Part No.	Description				Remarks
R15		1-249-374-11	CARBON MELF	10K	5%	1/8W (G, IT)	
R16		1-249-343-11	CARBON MELF	4.7K	5%	1/8W (G, IT)	
R21	⚠	1-249-404-00	CARBON (SMALL)	82	5%	1/4W	F
R22		1-249-433-11	CARBON (SMALL)	22K	5%	1/4W	
R23		1-249-335-11	CARBON MELF	1K	5%	1/8W	
R24		1-249-353-11	CARBON MELF	33K	5%	1/8W	
R25		1-249-346-11	CARBON MELF	8.2K	5%	1/8W	
R27		1-249-432-11	CARBON (SMALL)	18K	5%	1/4W	
R28		1-249-423-11	CARBON (SMALL)	3.3K	5%	1/4W	
R29		1-249-347-11	CARBON MELF	10K	5%	1/8W	
R31		1-249-331-11	CARBON MELF	470	5%	1/8W	
R32		1-249-347-11	CARBON MELF	10K	5%	1/8W	
R33		1-249-347-11	CARBON MELF	10K	5%	1/8W	
R34		1-249-437-11	CARBON (SMALL)	47K	5%	1/4W	
R35		1-249-355-11	CARBON MELF	47K	5%	1/8W	
R37		1-249-359-11	CARBON MELF	100K	5%	1/8W	
R38		1-249-363-11	CARBON MELF	220K	5%	1/8W	
R39		1-249-339-11	CARBON MELF	2.2K	5%	1/8W	
R40		1-249-338-11	CARBON MELF	1.8K	5%	1/8W	
R41		1-249-344-11	CARBON MELF	5.6K	5%	1/8W	
R42		1-249-359-11	CARBON MELF	100K	5%	1/8W	
R43		1-249-363-11	CARBON MELF	220K	5%	1/8W	
R44		1-249-339-11	CARBON MELF	2.2K	5%	1/8W	
R45		1-249-338-11	CARBON MELF	1.8K	5%	1/8W	
R46		1-249-344-11	CARBON MELF	5.6K	5%	1/8W	
R47	⚠	1-249-409-11	CARBON (SMALL)	220	5%	1/4W	F
R48		1-249-359-11	CARBON MELF	100K	5%	1/8W	
R49		1-249-359-11	CARBON MELF	100K	5%	1/8W	
R61		1-249-359-11	CARBON MELF	100K	5%	1/8W	
R62		1-249-355-11	CARBON MELF	47K	5%	1/8W	
R64		1-249-351-11	CARBON MELF	22K	5%	1/8W	
R65		1-249-355-11	CARBON MELF	47K	5%	1/8W	
R66		1-215-493-00	CARBON MELF	1M	5%	1/5W	
R67		1-249-359-11	CARBON MELF	100K	5%	1/8W	
R68		1-249-352-11	CARBON MELF	27K	5%	1/8W	
R69		1-249-351-11	CARBON MELF	22K	5%	1/8W	
R70		1-249-331-11	CARBON MELF	470	5%	1/8W	
R71		1-249-339-11	CARBON MELF	2.2K	5%	1/8W	
R72		1-249-351-11	CARBON MELF	22K	5%	1/8W	
R73		1-249-347-11	CARBON MELF	10K	5%	1/8W	
R74		1-249-347-11	CARBON MELF	10K	5%	1/8W	
R75		1-249-343-11	CARBON MELF	4.7K	5%	1/8W	
R81		1-249-335-11	CARBON MELF	1K	5%	1/8W	
R82		1-249-335-11	CARBON MELF	1K	5%	1/8W	
R83		1-249-335-11	CARBON MELF	1K	5%	1/8W	
R84		1-249-335-11	CARBON MELF	1K	5%	1/8W	
R85		1-249-347-11	CARBON MELF	10K	5%	1/8W	
R86		1-249-335-11	CARBON MELF	1K	5%	1/8W	
R87		1-249-347-11	CARBON MELF	10K	5%	1/8W	
R88		1-249-343-11	CARBON MELF	4.7K	5%	1/8W	
R89		1-249-335-11	CARBON MELF	1K	5%	1/8W	
R90		1-249-343-11	CARBON MELF	4.7K	5%	1/8W	
R91		1-249-335-11	CARBON MELF	1K	5%	1/8W	
R92	⚠	1-249-401-11	CARBON (SMALL)	47	5%	1/4W	F
R101		1-249-341-11	CARBON MELF	3.3K	5%	1/8W	
R102		1-249-332-11	CARBON MELF	560	5%	1/8W	
R103		1-249-335-11	CARBON MELF	1K	5%	1/8W	
R104		1-249-328-11	CARBON MELF	270	5%	1/8W	
R105		1-249-343-11	CARBON MELF	4.7K	5%	1/8W	
R106		1-249-339-11	CARBON MELF	2.2K	5%	1/8W	
R107		1-249-343-11	CARBON MELF	4.7K	5%	1/8W	
R108		1-249-323-11	CARBON MELF	100	5%	1/8W	
R109		1-249-343-11	CARBON MELF	4.7K	5%	1/8W	
R110	⚠	1-249-405-11	CARBON (SMALL)	100	5%	1/4W	F
R111		1-249-341-11	CARBON MELF	3.3K	5%	1/8W	
R112		1-249-332-11	CARBON MELF	560	5%	1/8W	
R113		1-249-335-11	CARBON MELF	1K	5%	1/8W	
R114		1-249-328-11	CARBON MELF	270	5%	1/8W	
R115		1-249-351-11	CARBON MELF	22K	5%	1/8W	
R116		1-249-339-11	CARBON MELF	2.2K	5%	1/8W	
R117		1-249-343-11	CARBON MELF	4.7K	5%	1/8W	
R118		1-249-323-11	CARBON MELF	100	5%	1/8W	
			(VARIABLE RESISTOR)				
RV21		1-238-598-11	RES, ADJ, CARBON 2.2K (AEP, UK)				
RV21		1-238-599-11	RES, ADJ, CARBON 4.7K (G, IT)				
RV22		1-238-601-11	RES, ADJ, CARBON 22K				
RV24		1-238-601-11	RES, ADJ, CARBON 22K (AEP, UK)				
RV24		1-238-602-11	RES, ADJ, CARBON 47K (G, IT)				
			(TRANSFORMER)				
T21		1-404-807-11	TRANSFORMER, DISCRIMINATOR				
T23		1-236-465-11	ENCAPSULATED COMPONENT (G, IT)				
			(TERMINAL)				
TM1	*	1-537-138-31	TERMINAL BOARD (ANTENNA)				
			(CONNECTOR PIN)				
TP1	*	1-560-060-00	PIN, CONNECTOR 2P				
			(CRYSTAL VIBRATOR)				
XT81		1-577-126-11	VIBRATOR, CRYSTAL (7.2MHz)				

****

1-638-340-11 CONNECTOR BOARD (H3600)
1-638-336-11 CONNECTOR BOARD (H6600)
****

The components identified by mark ⚠ or dotted line with mark ⚠ are critical for safety.
Replace only with part number specified.

When indicating parts by reference number, please include the board name.

CONNECTOR DISPLAY

Ref. No.	Part No.	Description				Remarks
	* A-4341-562-A	DISPLAY BOARD, COMPLETE (H3600: AEP, UK)				
	* A-4341-563-A	DISPLAY BOARD, COMPLETE (H3600: G, IT)				
	* A-4341-554-A	DISPLAY BOARD, COMPLETE (H6600: AEP, UK)				
	* A-4341-556-A	DISPLAY BOARD, COMPLETE (H6600: G, IT)				
		**********				
	* 4-932-810-11	CUSHION (FL)				
		〈 CAPACITOR 〉				
C601	1-124-471-00	ELECT	1000uF	20%	6.3V	
C701	1-126-177-11	ELECT	100uF	20%	10V	
C702	1-164-159-11	CERAMIC	0.1uF		50V	
C703	1-164-159-11	CERAMIC	0.1uF		50V	
C704	1-124-463-00	ELECT	0.1uF	20%	50V	
C705	1-161-494-00	CERAMIC	0.022uF		25V	
C706	1-162-203-31	CERAMIC	15PF	5%	50V	
C707	1-162-203-31	CERAMIC	15PF	5%	50V	
C710	1-164-159-11	CERAMIC	0.1uF		50V	
C711	1-126-157-11	ELECT	10uF	20%	16V	
C712	1-125-624-11	DUBLE LAYERS	0.22F		5.5V	
C713	1-136-173-00	FILM	0.47uF	5%	50V	
C714	1-136-173-00	FILM	0.47uF	5%	50V	
C715	1-136-173-00	FILM	0.47uF	5%	50V	
		〈 CERAMIC VIBRATOR 〉				
CF701	1-579-125-11	VIBRATOR, CERAMIC (8MHz)				
		〈 CONNECTOR 〉				
CNJ601	* 1-566-859-11	SOCKET, CONNECTOR 15P				
CNJ602	* 1-564-341-11	PIN, CONNECTOR 7P				
CNJ603	* 1-564-337-00	PIN, CONNECTOR 3P				
CNJ604	* 1-565-561-11	PIN, CONNECTOR 3P				
CNJ701	* 1-564-342-11	PIN, CONNECTOR 8P				
CNJ702	* 1-564-339-00	PIN, CONNECTOR 5P				
		〈 DIODE 〉				
D701	8-719-912-20	DIODE	1SS120			
D702	8-719-912-20	DIODE	1SS120			
D707	8-719-912-20	DIODE	1SS120			
D710	8-719-301-39	DIODE	SEL2210S-D (PRESET)			
D711	8-719-301-39	DIODE	SEL2210S-D (TUNING)			
D712	8-719-912-20	DIODE	1SS120			
D714	8-719-912-20	DIODE	1SS120			
D715	8-719-010-28	DIODE	UZ-4.3BSA			
D716	8-719-912-20	DIODE	1SS120			
D717	8-719-912-20	DIODE	1SS120			
D718	8-719-912-20	DIODE	1SS120			

Ref. No.	Part No.	Description				Remarks
		〈 INDICATOR 〉				
FLT701 ⚠	1-519-651-11	INDICATOR TUBE, FLUORESCENT				
		〈 IC 〉				
IC701	8-759-246-31	IC	TMP87CK70F-6001			
IC702	8-759-500-31	IC	X24C01P (H3600)			
IC702	8-759-504-12	IC	X24C01S (H6600)			
IC703	8-749-920-83	IC	GP1U52XB (H3600)			
IC703	8-741-100-63	IC	SBX1619-51 (H6600)			
		〈 COIL 〉				
L701	1-410-521-11	INDUCTOR	100uH			
L702	1-410-521-11	INDUCTOR	100uH			
		〈 TRANSISTOR 〉				
Q701	8-729-900-80	TRANSISTOR	DTC114ES			
Q702	8-729-900-80	TRANSISTOR	DTC114ES			
Q703	8-729-620-05	TRANSISTOR	2SC2603-EF			
Q705	8-729-119-76	TRANSISTOR	2SA1175-HFE			
Q706	8-729-900-80	TRANSISTOR	DTC114ES			
Q707	8-729-620-05	TRANSISTOR	2SC2603-EF			
		〈 RESISTOR 〉				
R601	1-249-393-11	CARBON	10	5%	1/4W	
R701	1-249-417-11	CARBON	1K	5%	1/4W	
R702	1-249-417-11	CARBON	1K	5%	1/4W	
R703	1-249-417-11	CARBON	1K	5%	1/4W	
R704	1-249-417-11	CARBON	1K	5%	1/4W	
R705	1-249-417-11	CARBON	1K	5%	1/4W	
R706	1-249-423-11	CARBON	3.3K	5%	1/4W	
R707	1-249-423-11	CARBON	3.3K	5%	1/4W	
R708	1-249-421-11	CARBON	2.2K	5%	1/4W	
R709	1-249-423-11	CARBON	3.3K	5%	1/4W	
R710	1-249-429-11	CARBON	10K	5%	1/4W	
R711	1-249-429-11	CARBON	10K	5%	1/4W	
R712	1-249-411-11	CARBON	330	5%	1/4W	
R713	1-247-887-00	CARBON	220K	5%	1/4W	
R714	1-249-429-11	CARBON	10K	5%	1/4W	
R715	1-249-417-11	CARBON	1K	5%	1/4W	
R716	1-249-429-11	CARBON	10K	5%	1/4W	
R717	1-249-425-11	CARBON	4.7K	5%	1/4W	
R718	1-249-429-11	CARBON	10K	5%	1/4W	
R719	1-249-429-11	CARBON	10K	5%	1/4W	
R720	1-249-429-11	CARBON	10K	5%	1/4W	
R721	1-249-429-11	CARBON	10K	5%	1/4W	
R722	1-249-429-11	CARBON	10K	5%	1/4W	
R723	1-249-423-11	CARBON	3.3K	5%	1/4W	
R724	1-249-429-11	CARBON	10K	5%	1/4W	

The components identified by mark ⚠ or dotted line with mark ⚠ are critical for safety.
Replace only with part number specified.

When indicating parts by reference number, please include the board name.

CONNECTOR DISPLAY

Ref. No.	Part No.	Description				Remarks
R725	1-249-417-11	CARBON	1K	5%	1/4W	
R726	1-249-417-11	CARBON	1K	5%	1/4W	
R727	1-249-417-11	CARBON	1K	5%	1/4W	
R728	1-249-417-11	CARBON	1K	5%	1/4W	
R729	1-249-417-11	CARBON	1K	5%	1/4W	
R730	1-249-417-11	CARBON	1K	5%	1/4W	
R731	1-249-429-11	CARBON	10K	5%	1/4W	
R732	1-249-429-11	CARBON	10K	5%	1/4W	
R733	1-249-429-11	CARBON	10K	5%	1/4W	
R734	1-249-417-11	CARBON	1K	5%	1/4W	
R736	1-249-429-11	CARBON	10K	5%	1/4W	
R737	1-249-409-11	CARBON	220	5%	1/4W	
R738	1-247-895-00	CARBON	470K	5%	1/4W	
		〈 SWITCH 〉				
S701	1-554-303-21	SWITCH, TACTILE (CLOCK)				
S702	1-554-303-21	SWITCH, TACTILE (TIMER CONTROL)				
S703	1-554-303-21	SWITCH, TACTILE (TIMER SET)				
S705	1-554-303-21	SWITCH, TACTILE (MEMORY NEXT)				
S706	1-554-303-21	SWITCH, TACTILE (MODE)				
S707	1-554-303-21	SWITCH, TACTILE (STEREO/MONO)				
S708	1-554-303-21	SWITCH, TACTILE (BAND)				
S709	1-554-303-21	SWITCH, TACTILE (TUNING -)				
S710	1-554-303-21	SWITCH, TACTILE (TUNING +)				
		〈 CRYSTAL VIBRATOR 〉				
XT701	1-527-997-22	VIBRATOR, CRYSTAL (32kHz)				

9-956-240-21

Sony Corporation
Audio Group

English
91C1957-1
Printed in Japan

Published by Customer Relations and Service Group

ST-H3600/H6600

SONY
SERVICE MANUAL

4/18
AEP Model
UK Model

CORRECTION-1

Correct your service manual as shown below.

☛ : indicates corrected portion.

Page	INCORRECT			CORRECT	
25	No.	Part No.	Description	Part No.	Description
	3	X-4941-544-1	PANEL ASSY, ASSY (H3600)	X-4941-544-1	PANEL ASSY, ASSY (H3600)
		X-4942-523-1	PANEL ASSY, ASSY (H6600)	X-4941-523-1	PANEL ASSY, ASSY (H6600)

9-956-240-81

Sony Corporation
Audio Group

English
93E0958-1
Printed in Japan

Published by Audio Sector Quality Assurance Dept.

SONY-04687

TC-H5600

SERVICE MANUAL

AEP Model
UK Model
E Model

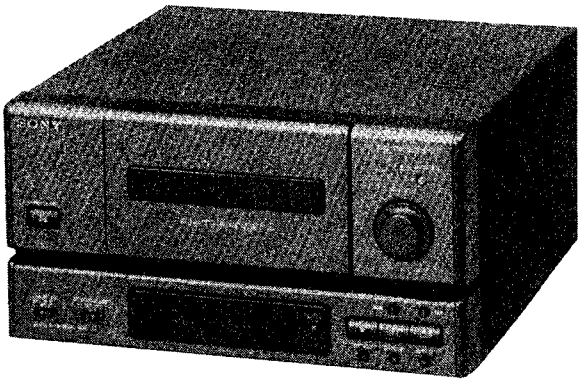

This unit is the cassette deck for the MHC-5600 component system.

Model Name Using Similar Mechanism	TC-WR97ES/WR870
Tape Transport Mechanism Type	TCM-200R8

SPECIFICATIONS

Recoding system	4-track 2-channel stereo
Frequency response	(DOLBY NR OFF) 30 – 14,000 Hz (±3 dB), using TYPE I cassette (Sony HF-S) 30 – 15,000 Hz (±3 dB) using TYPE II cassette 30 – 16,000 Hz (±3 dB) using TYPE IV cassette
Wow and flutter	0.06% WRMS±0.16% (DIN)
Inputs	PHONO (phono jacks): sensitivity 5 mV impedance 47 kohms VIDEO (phono jacks) sensitivity 300 mV impedance 47 kohms

Design and specifications subject to change without notice.

Dolby noise reduction manufactured under license from Dolby Laboratories Licensing Corporation.
"DOLBY" and the double-D symbol DD are trademarks of Dolby Laboratories Licensing Corporation.

Notes on chip component replacement

- Never reuse a disconnected chip component.
- Notice that the minus side of a tantalum capacitor may be damaged by heat.

Flexible Circuit Board Repairing

- Keep the temperature of the soldering iron around 270°C during repairing.
- Do not touch the soldering iron on the same conductor of the circuit board (within 3 times).
- Be careful not to apply force on the conductor when soldering or unsoldering.

STEREO CASSETTE DECK

SONY®

TABLE OF CONTENTS

SAFETY-RELATED COMPONENT WARNING!!

COMPONENTS IDENTIFIED BY MARK ⚠ OR DOTTED LINE WITH MARK ⚠ ON THE SCHEMATIC DIAGRAMS AND IN THE PARTS LIST ARE CRITICAL TO SAFE OPERATION. REPLACE THESE COMPONENTS WITH SONY PARTS WHOSE PART NUMBERS APPEAR AS SHOWN IN THIS MANUAL OR IN SUPPLEMENTS PUBLISHED BY SONY.

Caution when repairing

Normally the power of this set is supplied from the TA-H5600 amplifier connected. When only this set is repaired, connect the power of 18V AC as shown in the figure below.

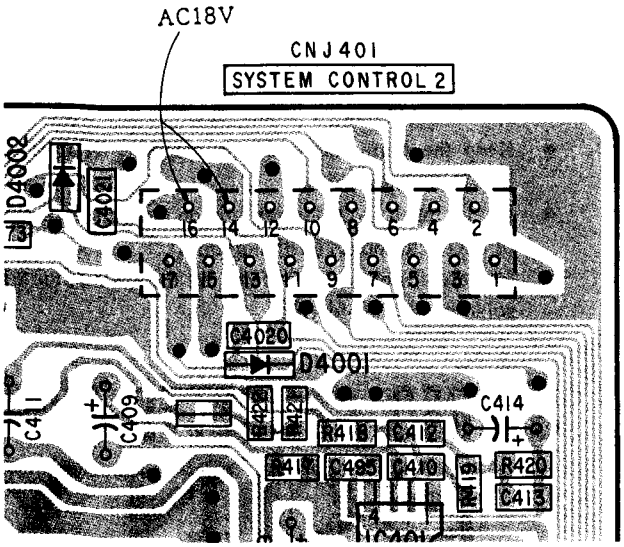

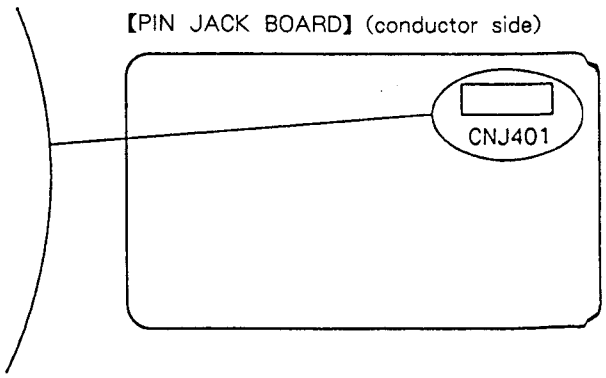

SECTION 1
GENERAL

This section is extracted from instruction manual.

LOCATION AND FUNCTION CONTROLS

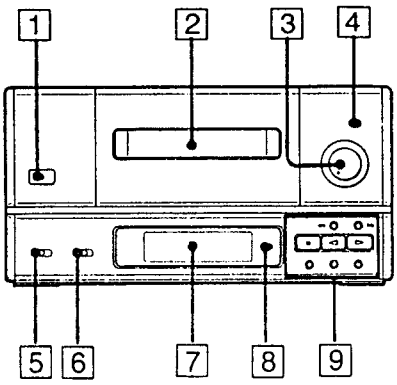

1. ≙ OPEN/CLOSE button
2. Cassette holder
3. REC LEVEL (recording level) control ⓬
4. AUTO REC LEVEL (automatic recording level) button ⓰
5. DOLBY NR (Dolby Noise Reduction) button ⓮
6. DIRECTION MODE button ⓬
7. Display window
8. COUNTER RESET button
   Resets the counter of the cassette deck to "0".
9. Tape operation buttons
   - ◀◀ ▶▶ : Fast winding
   - ■ : Stop
   - ▷ : Forward play
   - ◁ : Reverse play
   - ❚❚ : PAUSE
   - : MUTE (Muting)
   - ● : REC (recording)

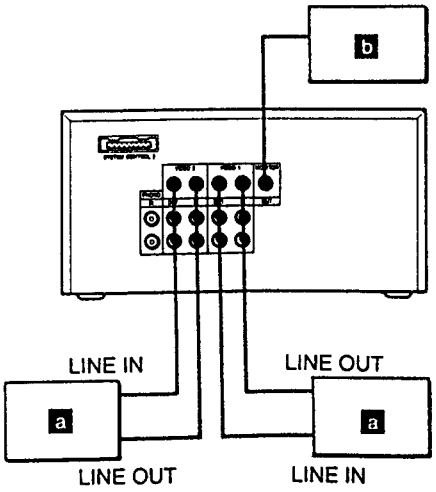

You can connect a VCR a to the VIDEO 1 or VIDEO 2 jacks. You can also connect a monitor TV b to MONITOR OUT. (TV with MONITOR IN jacks only.) To select VCR, press the VIDEO FUNCTION selector and light up the VIDEO 1 or VIDEO 2 indicator.

SECTION 2
DISASSEMBLY

NOTE : Follow the disassembly procedure in the numerical order given.

• FRONT PANEL

LEVER (LIFTER)

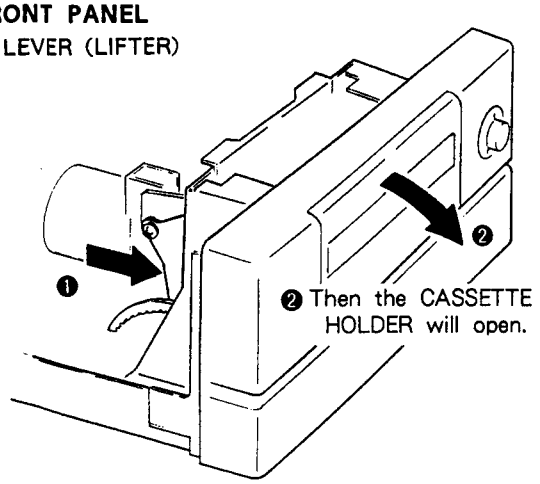

❶ Push LEVER (LIFTER) in the direction of arrow ❶. (Refer to the item of CASSETTE HOLDER on page 5.)

CASSETTE LID

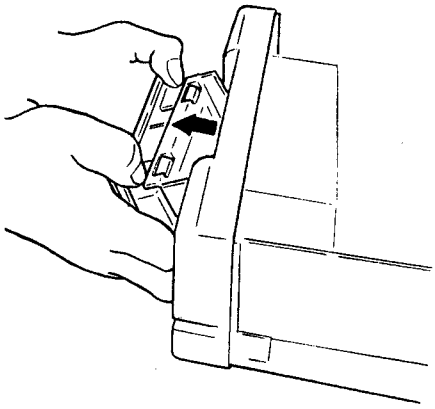

FRONT PANEL

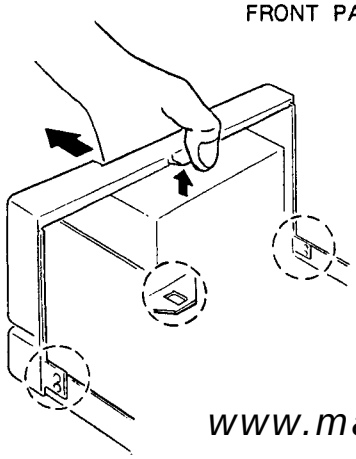

• MECHANISM DECK

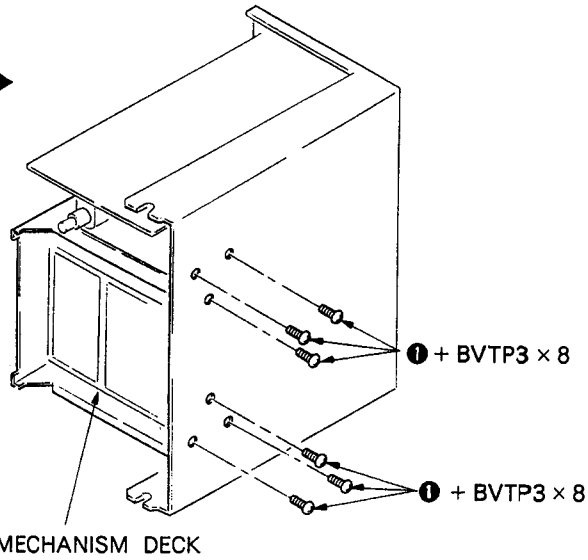

• PIN JACK/POWER BOARD

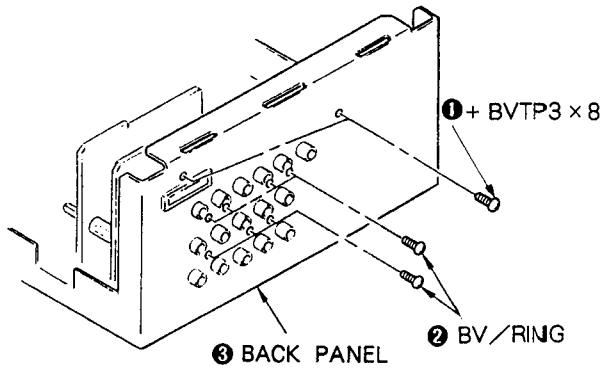

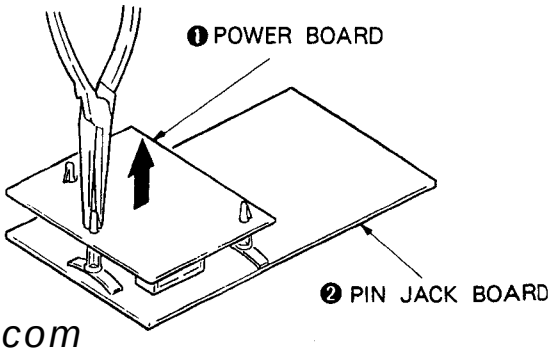

• CASSETTE HOLDER

❸ Push LEVER (LIFTER) in the direction of arrow and remove CASSETTE HOLDER.

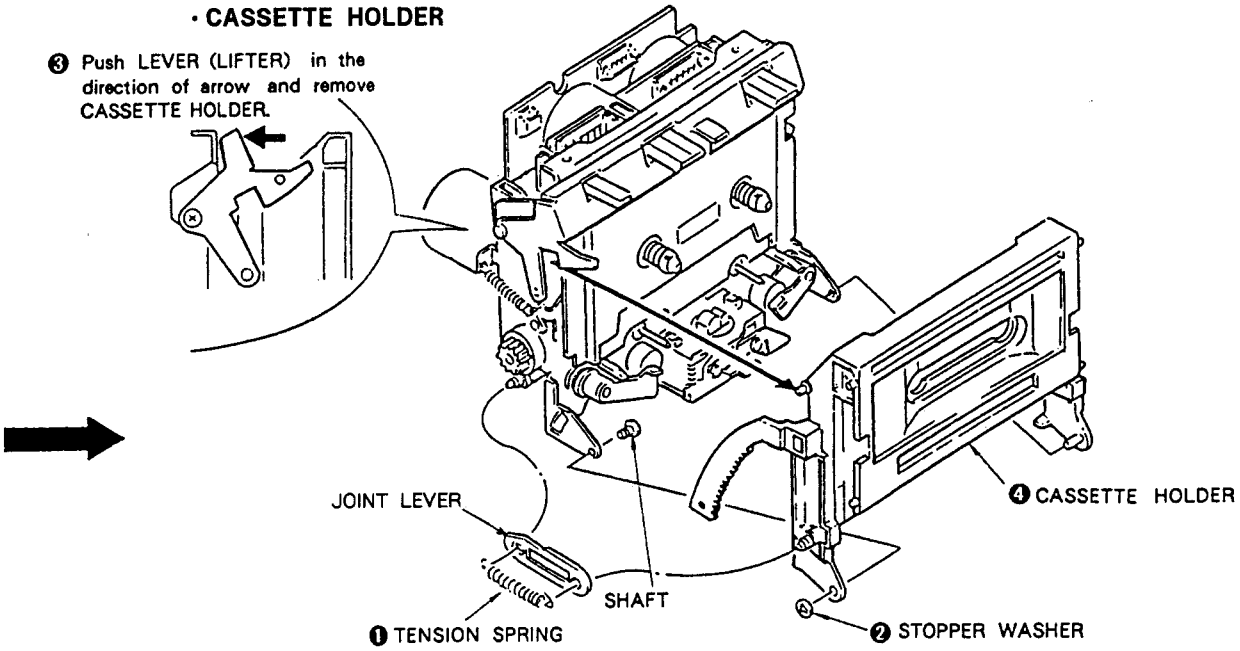

• ORNAMENTAL PLATE

❷ Push LEVER (LIFTER) in the direction of arrow and remove ORNAMENTAL PLATE.

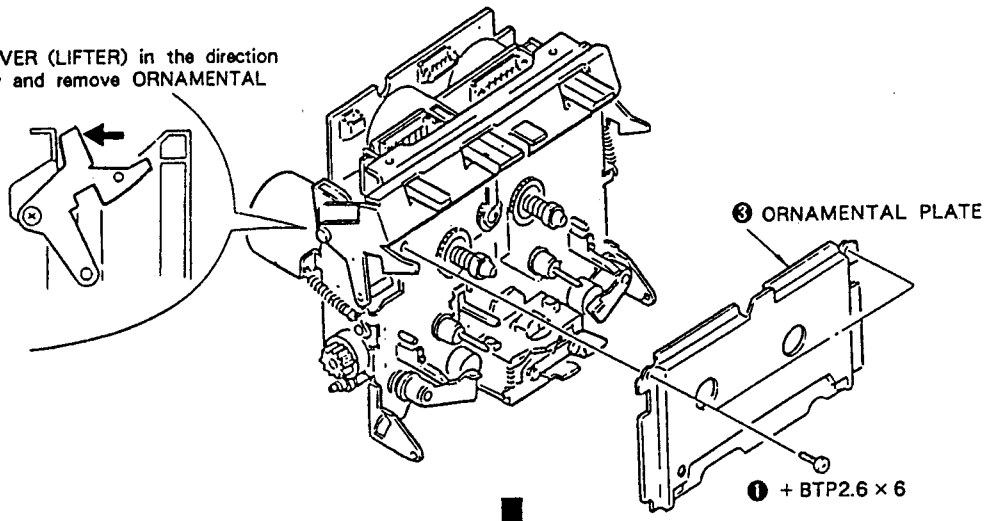

•PINCH LEVER/HEAD

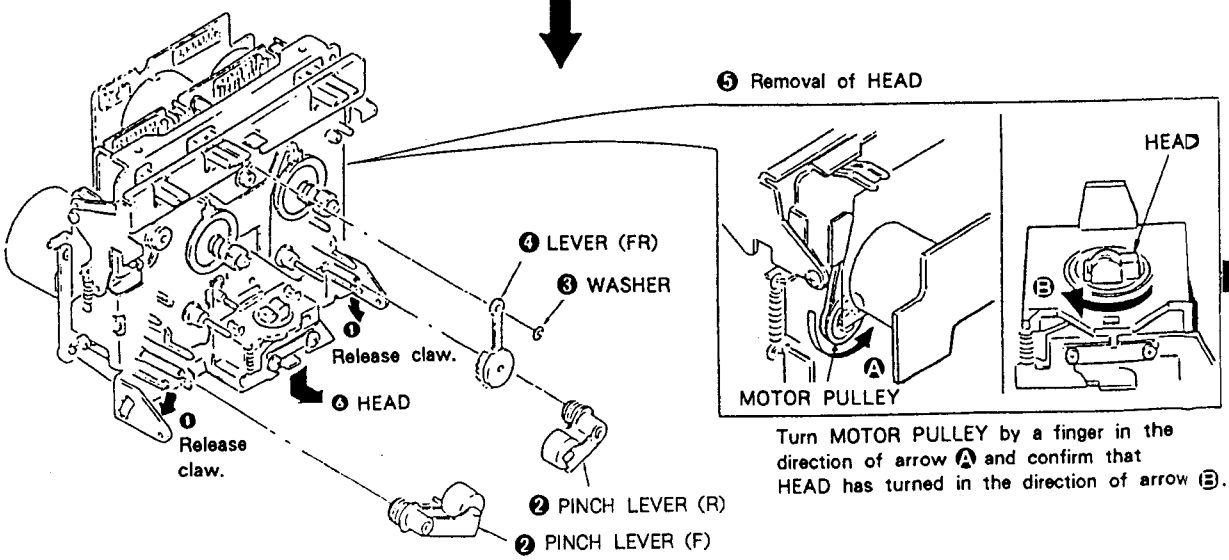

Turn MOTOR PULLEY by a finger in the direction of arrow Ⓐ and confirm that HEAD has turned in the direction of arrow Ⓑ.

CAPSTAN MOTOR/FLYWHEEL

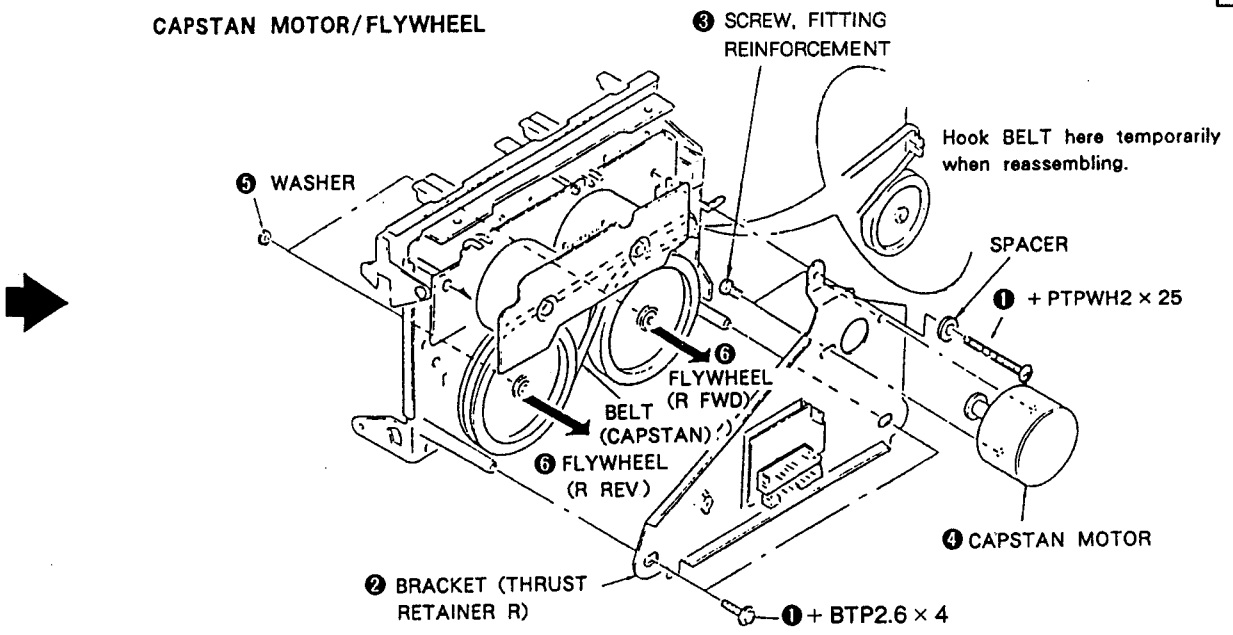

REEL and ASSIST MOTORS

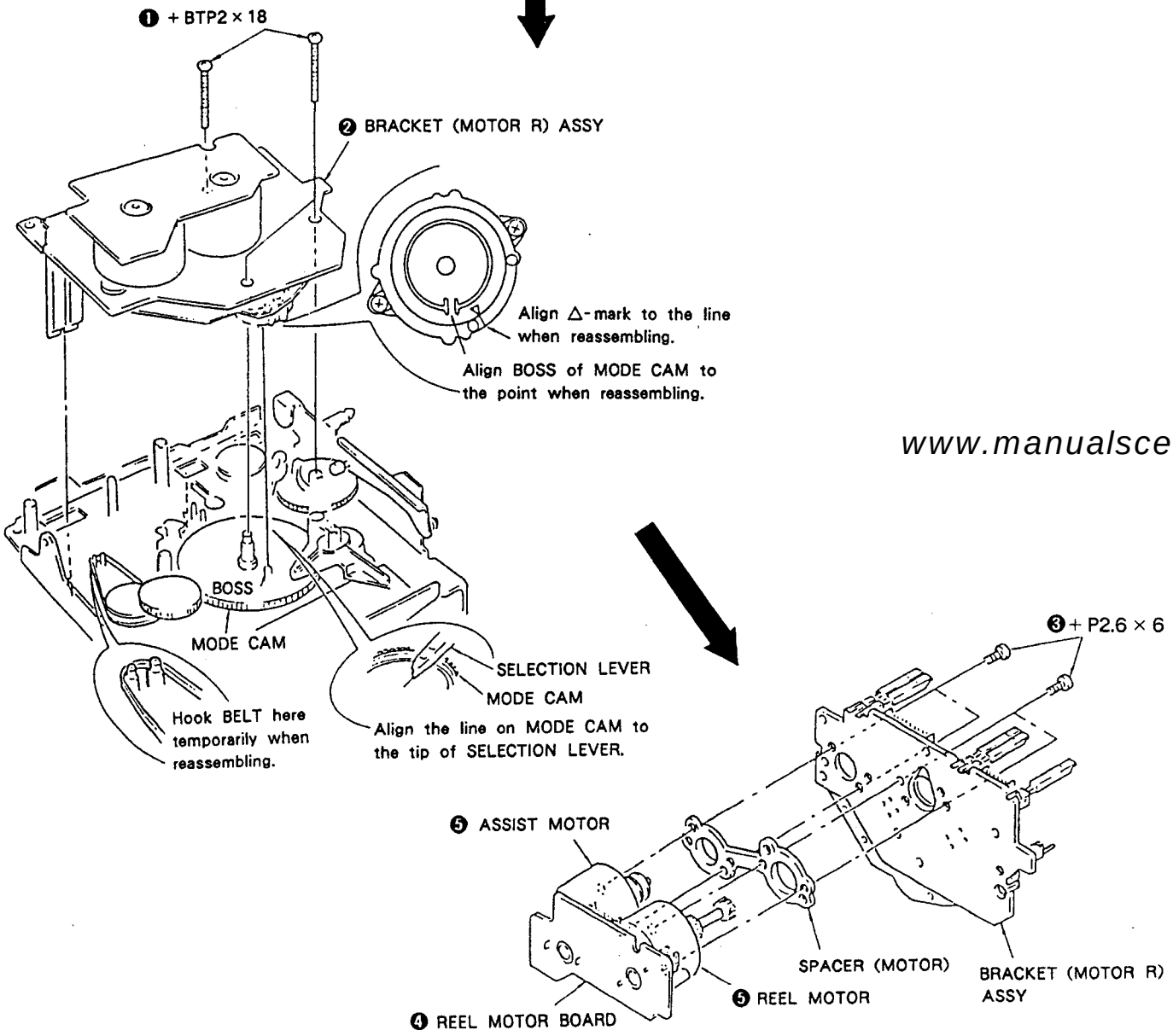

SECTION 3
MECHANICAL ADJUSTMENTS

PRECAUTION

1. Clean the following parts with a denatured alcohol-moistened swab:
   record/playback head — pinch roller
   erase head — rubber belts
   capstan — idlers
2. Demagnetize the record/playback head with a head demagnetizer.
   (Head demagnetizer do not approach for the erase head.)
3. Do not use a magnetized screwdriver for the adjustment.
4. After the adjustments, apply suitable locking compound to the parts adjusted.
5. The adjustments should be perfomed with the rated power supply voltage unless otherwise noted.

Torque Measurement

Torque	Torque meter	Meter reading
Forward	CQ-102C	30 to 60g·cm (0.42to 0.83 oz·inch)
Forward back tension	CQ-102C	1 to 5g · cm (0.014 to0.069oz · inch)
Reverse	CQ-102RC	30 to 60g · cm (0.42 to 0.83oz · inch)
Reverse back tension	CQ-102RC	1 to 5g · cm (0.014 to0.069oz · inch)
Forward, Reverse	CQ-201B	65 to 90g·cm (0.9 to 1.25 oz·inch)

LINE IN/OUT Terminal (CNJ401)

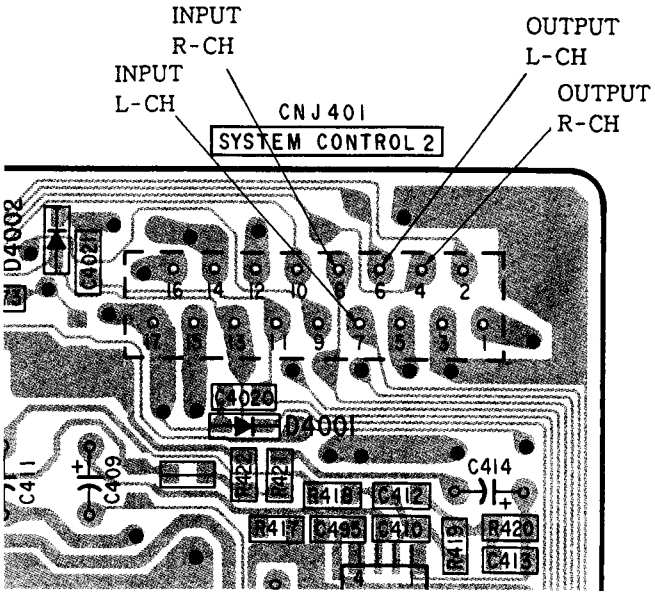

SECTION 4
ELECTRICAL ADJUSTMENTS

PRECAUTION

1. The adjustment should be performed in the publication. (Be sure to make playback adjustment at first.)
2. The adjustment and measurement should be performed for both L-CH and R-CH.

- Switch position
  DOLBY NR switch : OFF
  DIR MODE switch : ⇄

Test Tape

Tape	Contents	Use
P-4-A100	10kHz, −10dB	Azimuth Adjustment
P-4-L300	315Hz, 0dB	Level Adjustment
WS-48B	3kHz, 0dB	Tape Speed Adjustment

Record/Playback Head Azimuth Adjustment

Procedure:

1. Forward Playback Mode

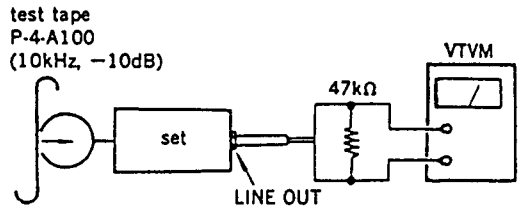

2. Turn the adjustment screw for the maximum output levels. If these levels do notmatch, turn the adjustment screw until both of output levels match together within 1dB.

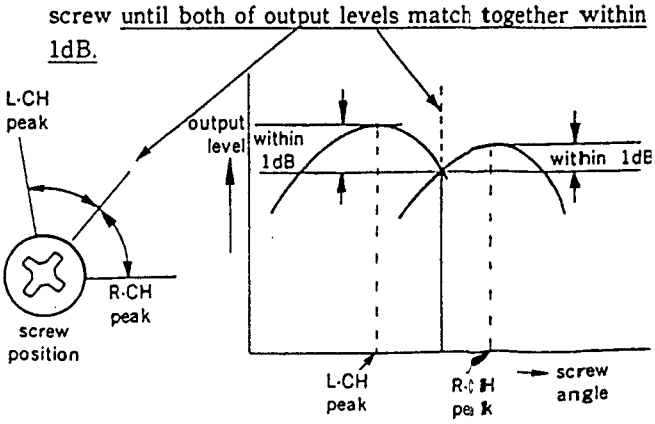

3. Playback Mode

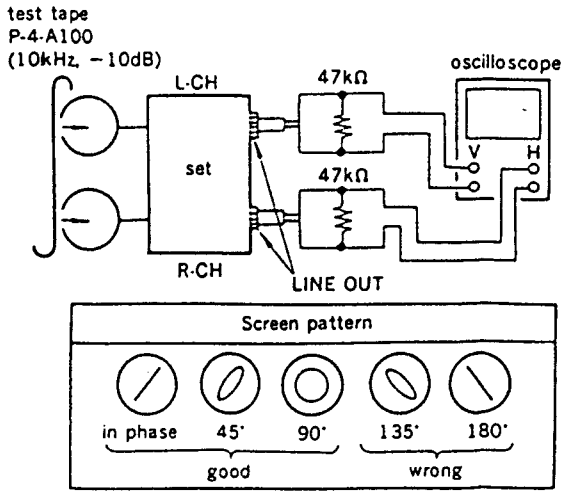

4. Change the reverse playback mode and repeat the steps 1 to 3.
5. After the adjustment, lock the adjustment screw with suitable locking compound.

Adjustment Location : – record/playback head –

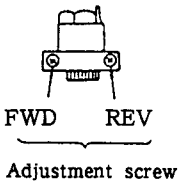

Tape Speed Adjustment

Procedure :

—Forward Playback Mode—

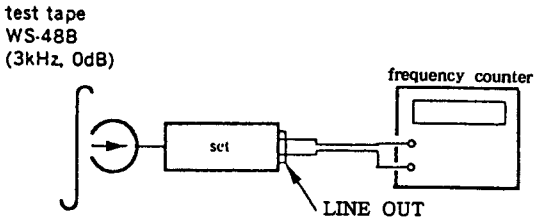

1. Set to FWD playback mode.
2. Adjust motor rear side (variable resistor) so that the frequency counter reading becomes 3,000 ± 15Hz.

Adjustment Location : – capstan motor –

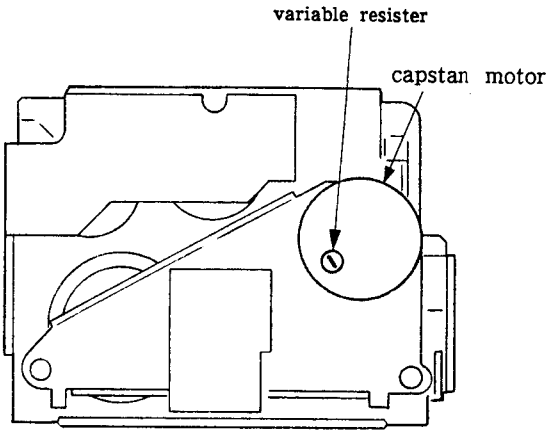

Playback Level Adjustment

Procedure:

—Forward Playback Mode—

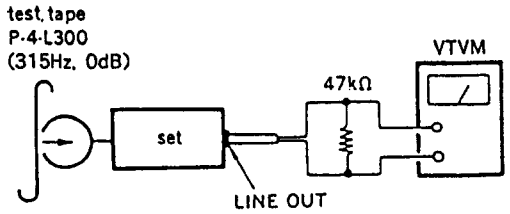

Adjustment RV101 (L-ch) and RV201 (R-ch) so that the reading on VTVM meets the adjustment limits below.

Adjustment Limit:

LINE OUT level: −10 ± 0.5dB (0.23 to 0.26V)

Level Difference between Channels: within 0.5dB

Confirm the LINE OUT level does not change in playback mode while changing the mode from playback to stop several times.

Record Bias Adjustment

Procedure:

1. Record Mode

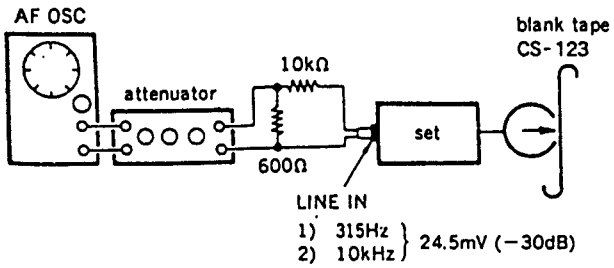

2. Playback Mode

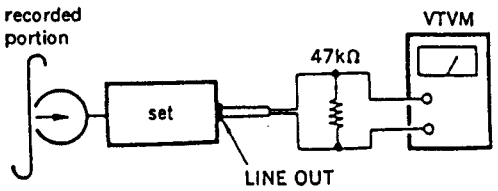

Playback the signal recorded in step 1.
Confirm that the 10kHz playback output is 0 ± 0.5dB relative to the 315Hz output. If necessary, adjust RV103 (L-CH), RV203 (R-CH) and repeat the steps given above.

Record Level Adjustment

Procedure:

1. Record Mode

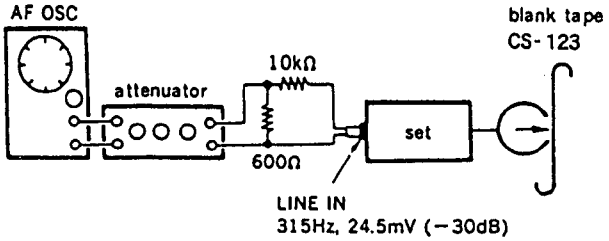

2. Playback Mode

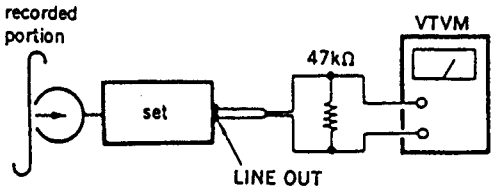

Confirm playback the tape recorded become adjustment level as follows.
If necessary, adjust RV102 (L-CH), RV202 (R-CH) and repeat steps 1 and 2.

Adjustment Limits:

LINE OUT level: −30 ± 0.5dB (23 to 26mV)

Adjustment Location:

【MAIN (B) BOARD】 – component side –

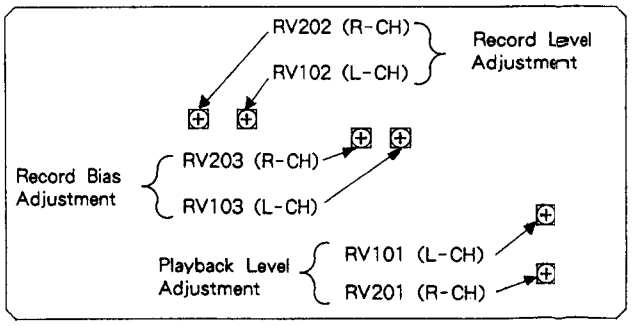

SECTION 5
DIAGRAMS

5-1. IC PIN DESCRIPTION

IC601 display microprocessor HD614023FA89

Fluorescent lamp indicator is activated by receiving data from IC702 (system controller).

Pin	Pin Name	I/O	Description
1～11	k-a	O	FL indicator tube(FL601)segment output.
12			Not used(+5.6 V).
13	VDISP	—	Power supply for activating the FL indicator tube(-22 V).
14～25		I	Not used(GND).
26	Vcc	—	Power supply terminal(+5.6 V).
27	CLK	I	Data transmission clock input from IC702(system controller).
28	DATA	I	Serial data input from IC702(system controller).
29	SYNC	I	Sync signal input which indicates the first byte of data sent from IC702(system controller).
30			Not used(GND).
31	SAF	O	LED(D601)light output in the AUTO REL LEVEL.
32～35		O	Not used.
36～42			Not used(GND).
43	RESET	I	Reset input from IC702(system controller). "L": Reset.
44	TEST	I	Not used(+5.6V).
45	OSC1	I	Clock input(4.19MHz).
46	OSC2	O	Clock output.
47	GND	—	Power supply terminal(GND).
48～50			Not used(GND).
51			Not used(Pull-up).
52			Not used.
53～57	1G－5G	O	FL indicator tube(FL601)grid output.
58～59		O	Not used.
60～64	p－1	O	FL indicator tube(FL601)segment output.

IC406 selector controller M50760-315FP

AV output is switched with the audio bus signal sent from the amplifier (TA-H5600).

Pin	Pin Name	I/O	Description
1	D3	I	Model selection input port. Connected to GND.
2	A0	O	Audio IN switch(IC403 and IC404)control output port.
3			Not used.
4	A1	O	Audio IN switch(IC403 and IC404)control output port.
5	CNVss	—	Power supply terminal(GND).
6	Vss	—	Power supply terminal(GND).
7	A2	O	Audio IN switch(IC403 and IC404)control output port.
8	B0	O	Audio OUT switch(IC405)control output port.
9	B1	O	Audio OUT switch(IC405)control output port.
10			Not used.
11	V0	O	Video IN/OUT switch(IC407)control output port.
12	V1	O	Video IN/OUT switch(IC407)control output port.
13～14			Not used(GND).
15			Not used.
16	RESET	I	Reset input. "L": Reset
17	XOUT	O	Clock output.
18	XIN	I	Clock input.
19	S	I	Serial data input(audio bus).
20	D0	I	Serial data input(audio bus).
21	D1	I	Model selection input port. Connected to +5 V(pull up).
22			Not used.
23	D2	I	Model selection input port. Connected to GND.
24	V_{DD}	—	Power supply terminal(+5 V).

IC702 system controller M50944-155SP

The system is wholly controlled by communication between IC601 (display microprocessor) and IC701 (mechanism controller).

Pin No.	Pin Name	I/O	Description
1	VREF	I	A/D input port reference voltage input(+5.6 V).
2	MET－R	I	Level meter Rch input(analog)from the meter amplifier(IC305).
3	MET－L	I	Level meter Lch input(analog)from the meter amplifier(IC305).
4	VOL A/D	I	REC LEVEL VOLUME(RV301)position detect input(analog).
5		—	Not used.
6	KEY4	I	Key switch input(analog).
7	KEY3	I	Key switch input(analog).
8	KEY2	I	Key switch input(analog).
9	KEY1	I	Key switch input(analog).
10	SYNC	O	Sync signal output which indicates the first byte of data sent to IC601.
11	FL SK	O	Data transmission clock output to IC601.
12	FL SO	O	Serial data output to IC601.
13	AUB OUT	O	Audio bus output.
14	AUB IN	I	Audio bus output(negative edge).
15	POW IN	I	Not used(pull up).
16	PB SEL	O	Not used(open).
17	AMS SEL	O	Not used(open).
18	MD REQ	I	Data request input from IC701.
19	MD SCLK	O	Data transmission clock output to IC701.
20	MD SO	O	Serial data output to IC701.
21	MD SI	I	Serial data input from IC701.
22	RES OUT	O	Reset signal output to IC601.
23		—	Not used(open).
24	AUB IN	I	Audio bus input(positive edge).
25		—	Not used(open).
26	GND	—	Power supply terminal(GND).
27	RES	I	System reset input. "L": Reset.
28	XIN	I	Clock input(4 MHz).
29	XOUT	O	Clock output.
30,31		—	Not used(open).
32	Vss	—	Power supply terminal(GND).
33	ϕ	—	Not used(open).
34	TEST 2	I	Test mode setting input. This set enters into the test mode when the power is on and it is set to "L"(CNP703 is shortened)＊1
35	TEST 1	I	Not used(GND).
36,37	VERSEL	I	Not used(+5.6 V).
38		—	Not used(open).
39	POW ON	I	Not used(GND).
40	VOL LED	O	Volume LED ON/OFF output. "L": light up.
41	VOL－	O	Volume moter(RV301)down control output for IC706.
42	VOL＋	O	Volume moter(RV301)up control output for IC706.
43	VOL SPD	O	Volume moter speed control output. "H": SLOW, "L": FAST.
44～47		O	Not used(open).
48	BIAS 4	O	Tape bias select output. "L": Metal.
49	BIAS 2	O	Tape bias select output. "L": CrO2.
50	BIAS 1	O	Tape bias select output. "L": Normal.
51	RMUTE	O	REC mute control output.
52		O	Not used(open).
53	RELAY	O	Mechanism deck head switch control output. "L": Relay on.
54		O	Not used(open).

Pin No.	Pin Name	I/O	Description
55	B/C	O	Dolby B/C control output. "L": Dolby C, "H": Dolby B.
56	ON/OFF	O	Dolby ON/OFF control output. "C": ON, "H": OFF
57	REC/PB	O	Dolby amplifier REC/PB control output. "L": REC, "H": PB.
58	PB70μs	O	Playback equalizer characteristic switch output. "H": Normal, "L": CrO2 or Metal.
59	AMS IN	O	Signal input from the AMS amplifier(IC304). With music: "H", No music: "L".
60	AMS/BS	O	Not used.
61	PASS	O	Not used(connect to ㊷ pin).
62	L MUTE	O	Line mute control output. "H": MUTE.
63	AVcc	O	Power supply terminal(+5.6 V).
64	Vcc	O	Power supply terminal(+5.6 V).

*1 Test mode
When the power is on and pin ㊹ is set to "L"(CNP703 is shortened.), the set enters the electrical adjustment test mode and the followings can be available.

(1) Source monitor
Recording signals can be monitored through the LINE OUT terminal(see page 7) because the line short is removed in recording.

(2) Recording memory
Recording memory is set to ON when the tape counter is reset at the record start point.

IC701 mechanism controller M50747-B83SP

The mechanism deck is controlled by receiving data from IC702 (system controller).

Pin No.	Pin Name	I/O	Description
1	Vcc	—	Power supply terminal(+5.6 V).
2	BCTRQ	O	Assist motor torque control output. "H": Large torque / "L": Small torque
3	SPEED	O	Not used(open).
4	TYPE 1	O	REC EQ select output. NORMAL tape: "H"
5	TYPE 2	O	REC EQ select output. CrO2 tape: "H"
6～9		O	Not used.
10	$\overline{\text{REVTAB}}$	I	REC switch(reverse:S1009)input. "H": When REC claw is broken.
11	$\overline{70\mu s}$	I	70μ switch(S1008)input. "H": 70μs, "L": 120μs(time constant of playback EQ).
12	$\overline{\text{METAL}}$	I	METAL switch(S1007)input. "H": METAL tape, "L": NORMAL or CrO2 tape.
13	$\overline{\text{HALF}}$	I	HALF switch(S1006)input. "L": When a tape is mounted.
14	S REEL	I	Supply reel base sensor(IC1001)input.
15	T REEL	I	Take-up reel base sensor(IC1002)input.
16,17		I	Not used(GND).
18		—	Not used(open).
19	SCLK	I	Data transmission clock input from IC702.
20	SO	O	Serial data output to IC702.
21	SI	I	Serial data input from IC702.
22	REQ	O	Data request output to IC702.
23～25		—	Not used(open).
26	$\overline{\text{INT}}$	I	Not used(+5.6 V).
27	CN Vss	—	Power supply terminal(GND).
28	$\overline{\text{RES}}$	I	Reset input. "L": Reset.
29	XIN	I	Clock input(4 MHz).
30	XOUT	O	Clock output.
31	ϕ		Not used.
32	Vss	—	Power supply terminal(GND).
33～50			Not used.

Pin No.	Pin Name	I/O	Description
51	ASSIST1	O	Head base is"H" when turned to the FWD direction.) *1
52	ASSIST2	O	Head base is"H" when turned to the RVS direction.)
53	REEL 1	O	Reel motor rotation control output. Reverse: "H") *2
54	REEL 2	O	Reel motor rotation control output. Forward: "H")
55	TQ1	O	Reel motor torque control output. PLAY: "H") *3
56	TQ2	O	Reel motor torque control output. FF/REW: "H")
57～60	CAM1-4	I	Rotary encoder input to detect the position of the head base of the mechanical block. *4
61	$\overline{\text{OPEN}}$	I	OPEN switch(S1004)input. "L": When the cassette holder completely opens.
62	$\overline{\text{CLOSE}}$	I	CLOSE switch(S1003)input. "L": When the cassette holder completely closed.
63	$\overline{\text{DOOR}}$	I	DOOR switch(S1002)input. "L": When the cassette holder is driven from open to close state.
64	$\overline{\text{FWDTAB}}$	I	REC switch (forward : S1005) input. "H" : When REC claw is broken.

*1

	STOP	Turn to FWD directiom	Turn to RVS direction	STOP
$\overline{\text{ASSIST 1}}$	L	H	L	H
$\overline{\text{ASSIST 2}}$	L	L	H	H

*2

	STOP	FWD/CLOSE	REV/OPEN	BRAKE
REEL 1	L	L	H	H
REEL 2	L	H	L	H

*3

	OPEN/CLOSE (large torque)	FF/REW (medium torque)	PLAY (small torque)	INHIBIT
TQ 1	L	L	H	H
TQ 2	L	H	L	H

*4

	Forward					Reverse			
	FWD PLAY	AMS/PAUSE	STOP	FF/REW	EJECT	FF/REW	STOP	AMS/PAUSE	RVS PLAY
CAM1	H	H	L	H	L	H	L	H	H
CAM2	H	L	H	H	L	H	H	L	H
CAM3	H	H	H	H	H	L	L	L	L
CAM4	H	H	H	L	L	L	H	H	H

5-2. SEMICONDUCTOR LEAD LAYOUTS

HD614023FA89

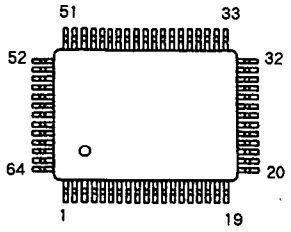

(TOP VIEW)

M50760-315FP

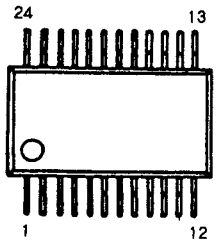

(TOP VIEW)

M5218AFP

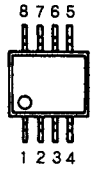

(TOP VIEW)

DTA114ES
DTA144ES
DTC114ES
DTC143TS
DTC144ES
2SA1344

GP2S22B

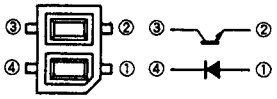

2SA1317-STN
2SD1012-FG

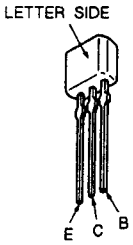

2SB1094-L
2SD2012

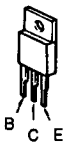

2SC945-P
2SC3330-T

2SD774-34

DCA010

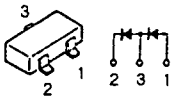

EC10DS2

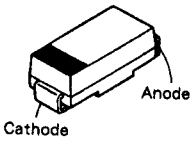

HZS7C2L
RD5.6ESB2
1SS120

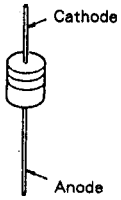

SEL2210S-C

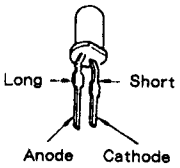

1SS355

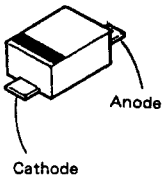

10E2N

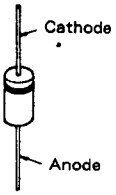

5-3. CRICUIT BOARDS LOCATION

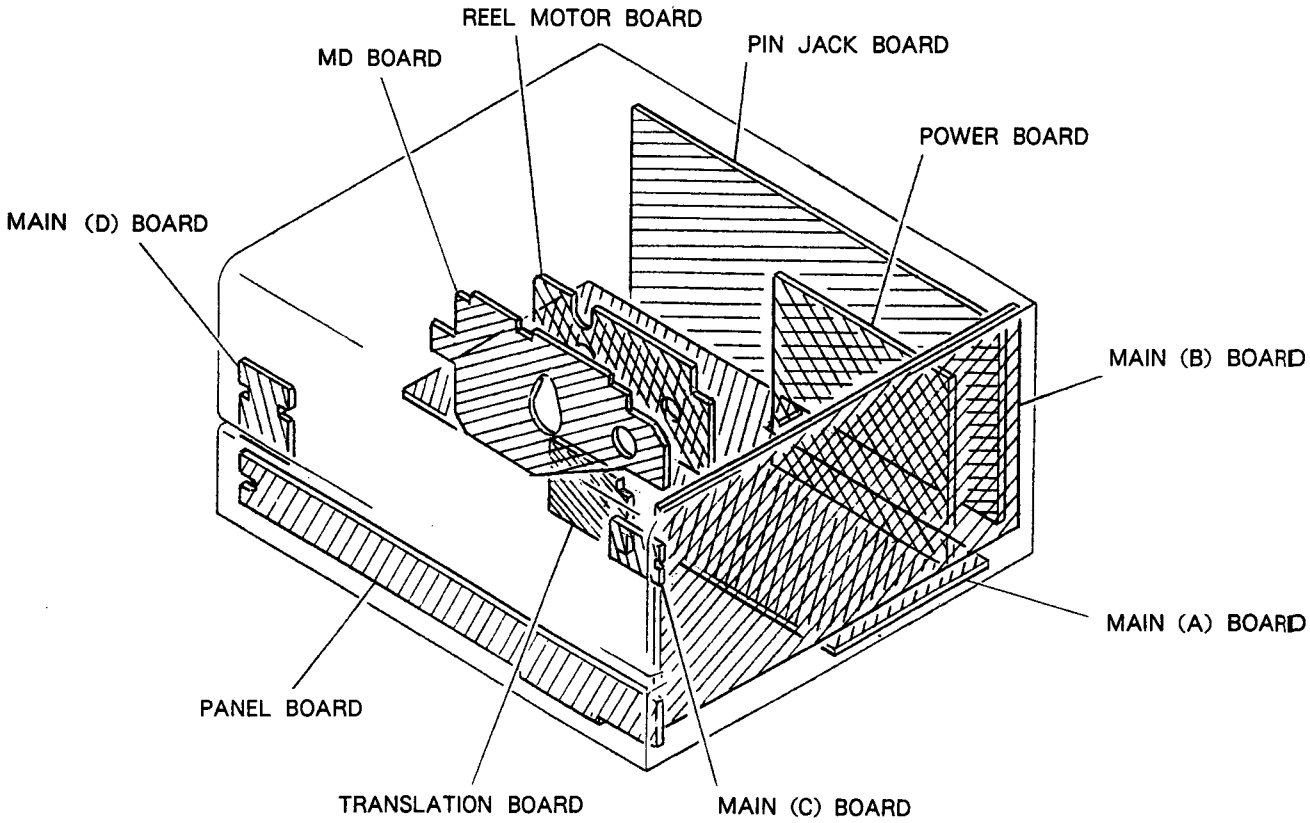

5-4. BLOCK DIAGRAM

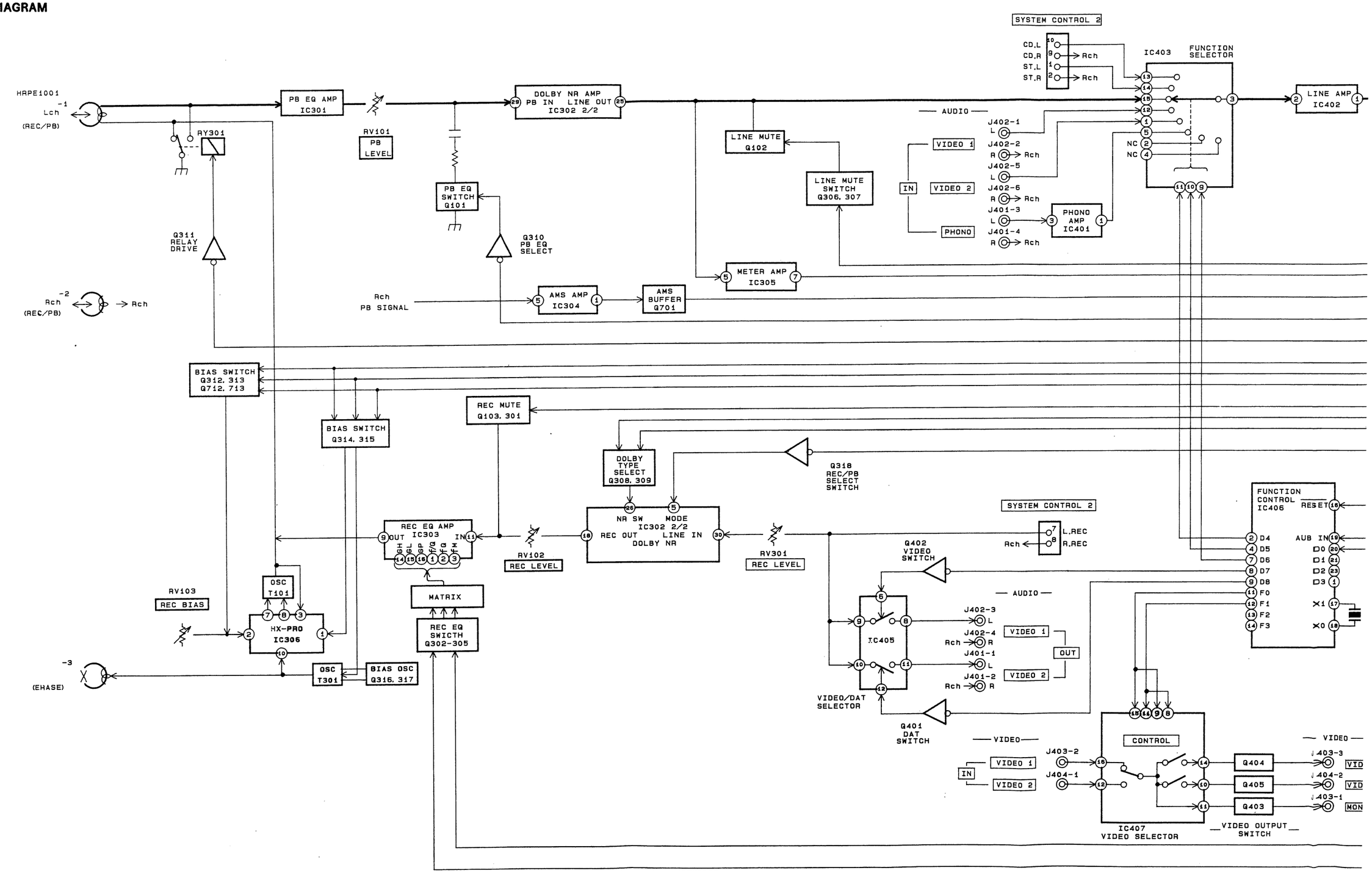

16

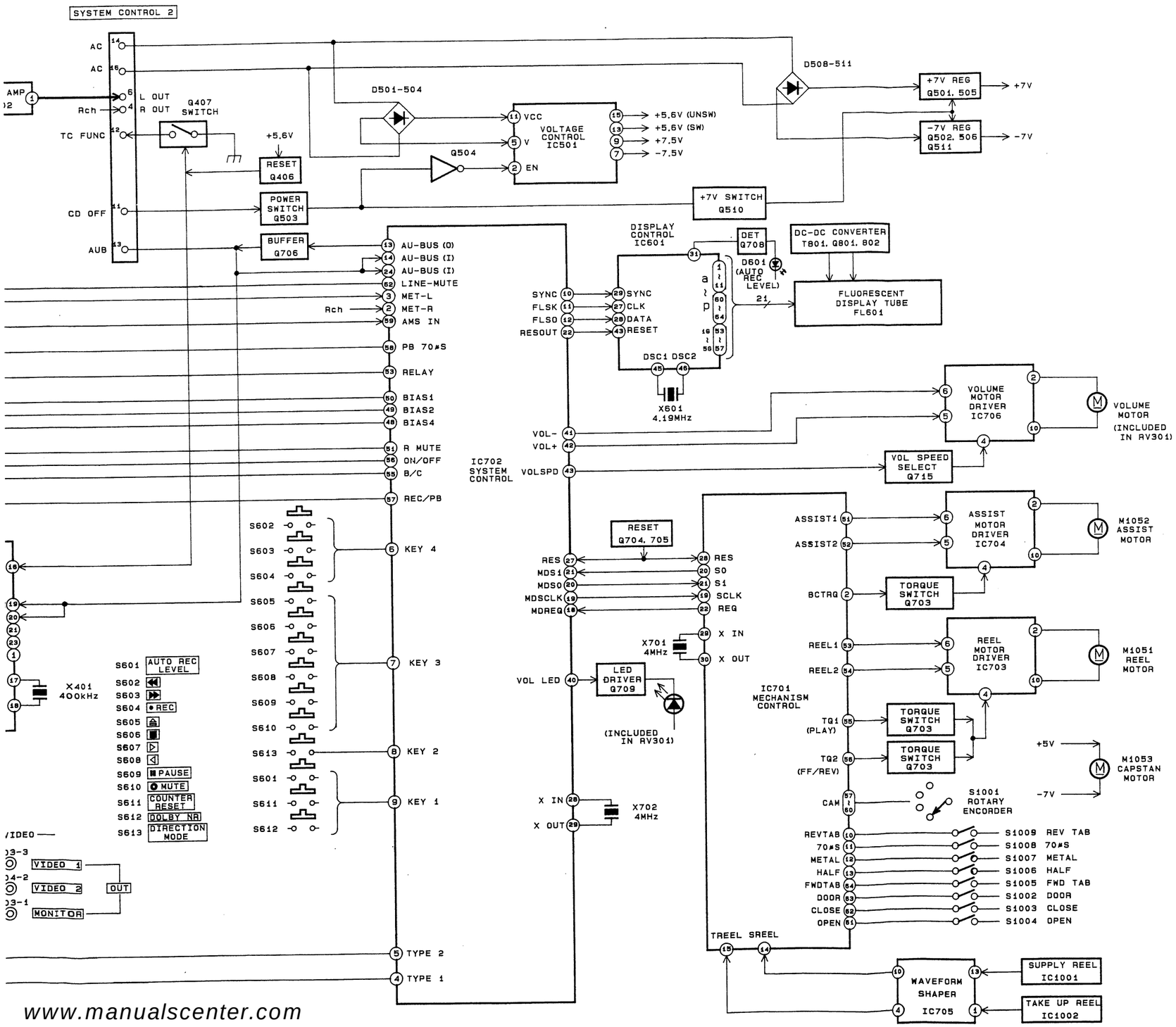

SONY-04687 / Druck 2

• IC BLOCK DIAGRAM

IC703,706 BA6219B
IC704 LB1641

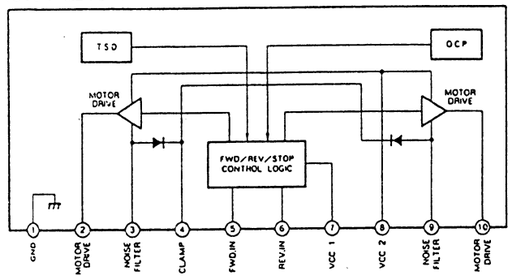

IC302 CXA1330S

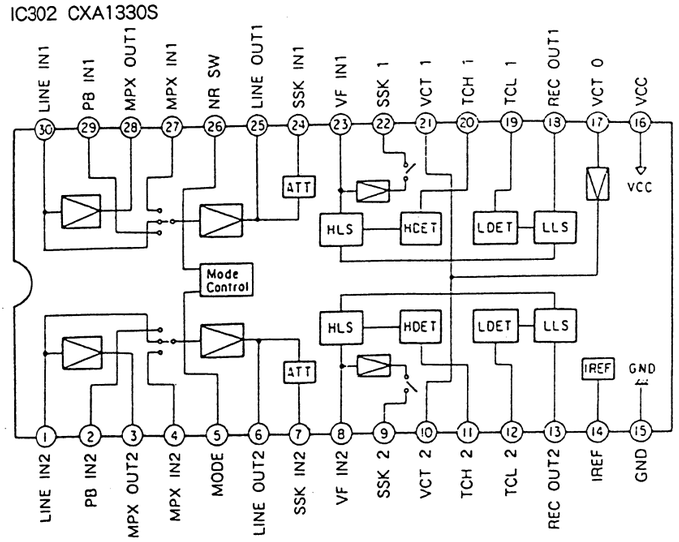

IC303 CXA1198AP

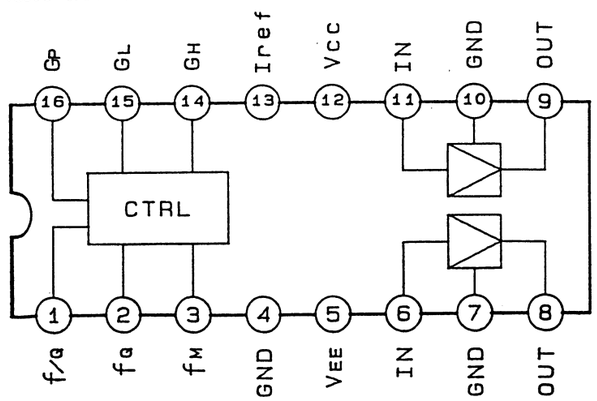

• Semiconductor Location

Ref. No.	Location	Ref. No.	Location
D101	C-12	Q306	D-11
D201	C-13	Q307	E-11
D301	I-5	Q308	F-11
D302	I-5	Q309	E-11
D303	E-11	Q310	E-11
D304	E-11	Q311	E-1
D305	E-1	Q312	B-4
D306	B-4	Q313	B-4
D307	C-4	Q314	B-5
D308	C-4	Q315	C-5
D309	C-4	Q316	F-2
D601	A-20	Q317	E-2
D701	C-17	Q318	F-11
D702	C-17	Q701	F-13
D703	E-12	Q702	F-13
D704	E-12	Q703	E-13
D705	F-12	Q704	D-17
D706	F-12	Q705	C-17
D707	E-14	Q706	C-15
D708	E-14	Q707	C-17
D709	E-13	Q708	B-19
D710	J-2	Q709	H-3
D711	J-2	Q712	B-5
D712	I-2	Q713	B-5
D713	C-15	Q715	I-1
D714	C-17	Q801	B-13
D720	C-10	Q802	B-11
D721	C-11		
D722	C-12		
D750	B-13		
D751	D-14		
D752	B-19		
D753	A-19		
D801	D-16		
D802	C-15		
D803	C-15		
D804	C-14		
D805	C-14		
IC301	C-2		
IC302	E-9		
IC303	I-4		
IC304	H-2		
IC305	D-13		
IC306	D-4		
IC701	E-16		
IC702	B-15		
IC703	E-13		
IC704	D-13		
IC705	D-15		
IC706	I-1		
IC1001	H-18		
IC1002	H-19		
Q101	D-10		
Q102	D-11		
Q103	H-5		
Q201	F-10		
Q202	D-11		
Q203	I-4		
Q301	G-5		
Q302	I-5		
Q303	I-5		
Q304	J-5		
Q305	I-5		

Note on Mounting Diagram:

- o—— : parts extracted from the component side.
- ■ : parts mounted on the conductor side.

5-5. PRINTED WIRING BOARDS – MAIN SECTION – • See page 14 for Semiconductor Lead Layouts and Circuit Boar

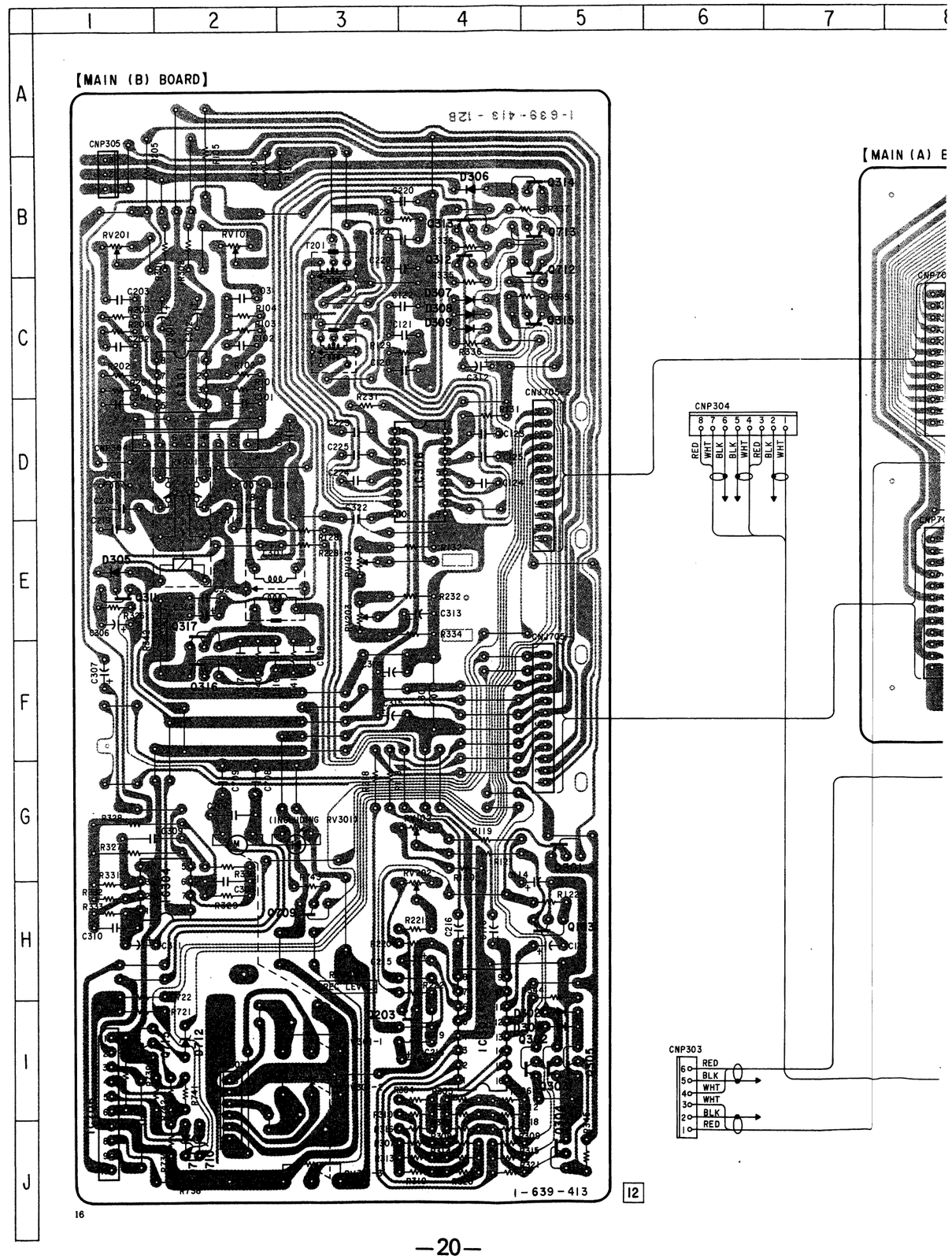

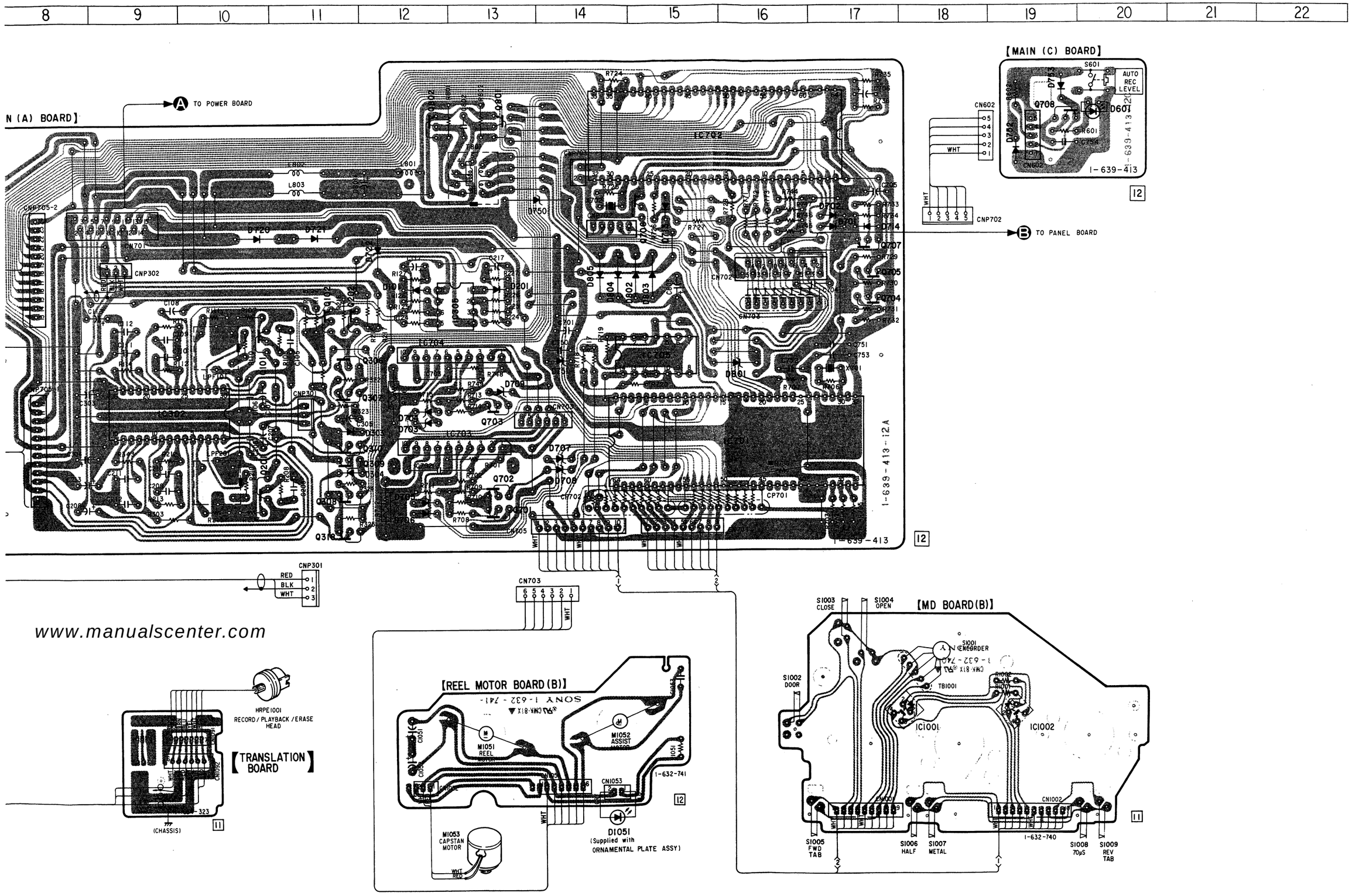

SONY-04687 / Druck 4

5-6. SCHEMATIC DIAGRAM – MAIN SECTION –

• See page 28 for Note on Schematic Diagram.

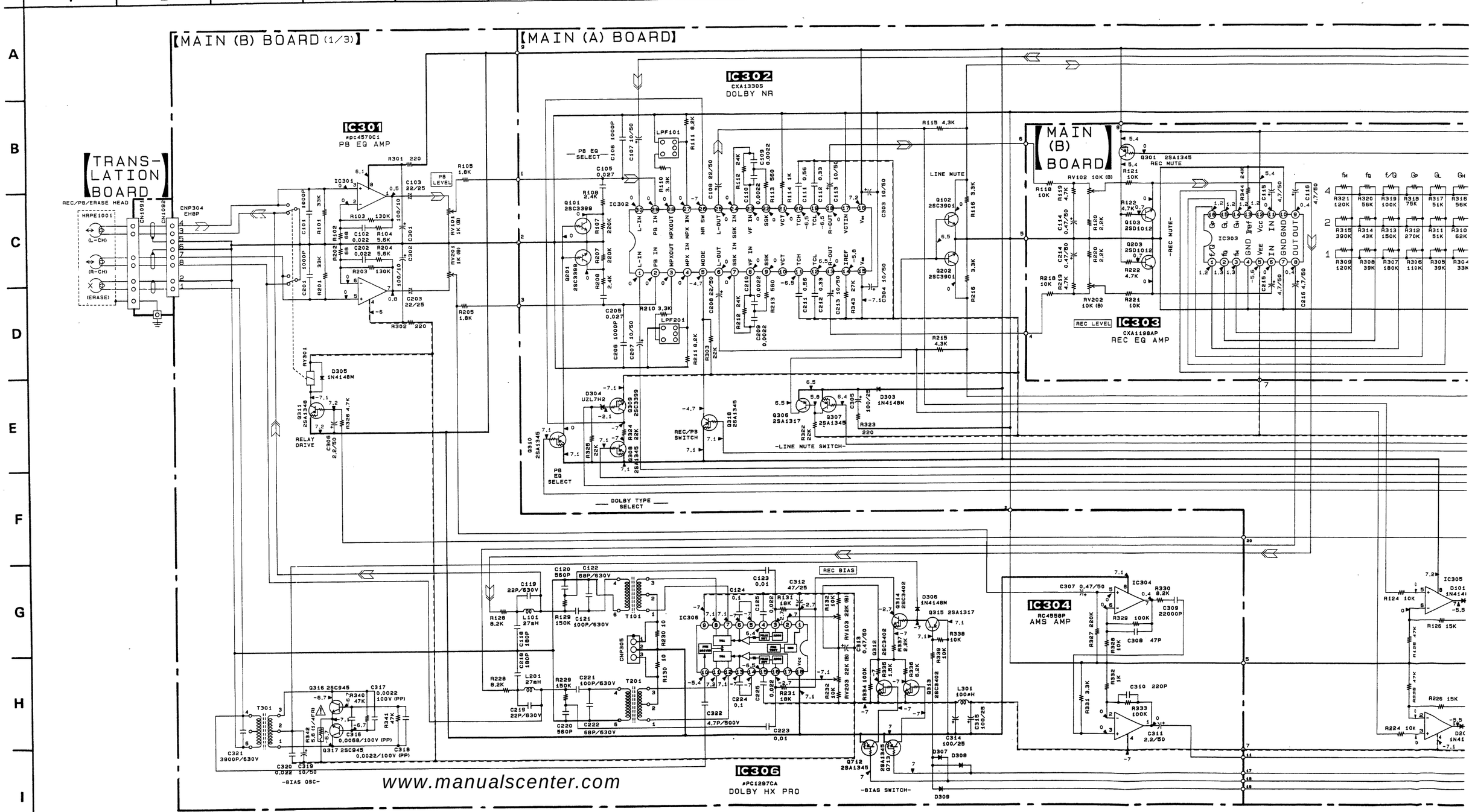

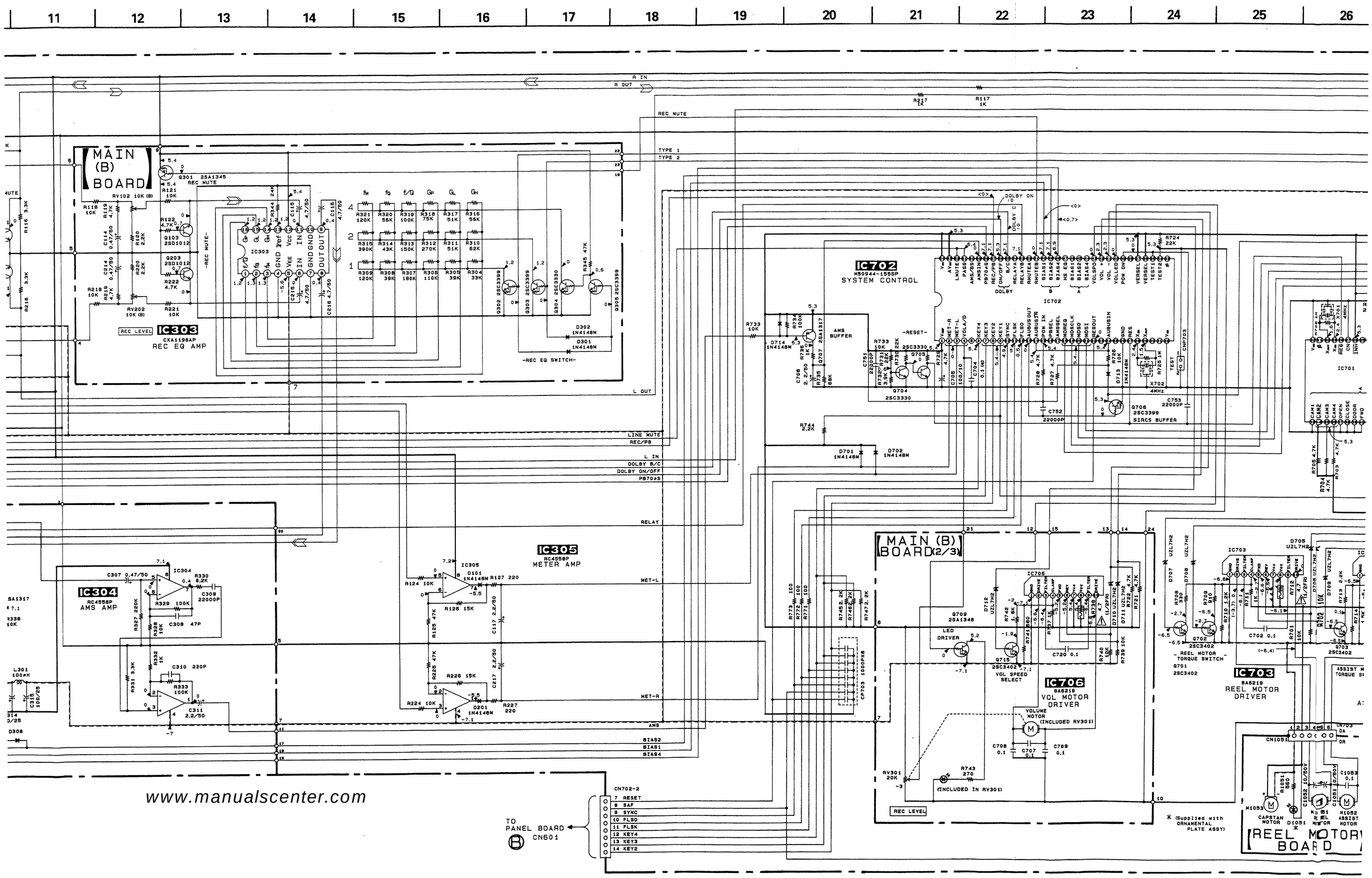

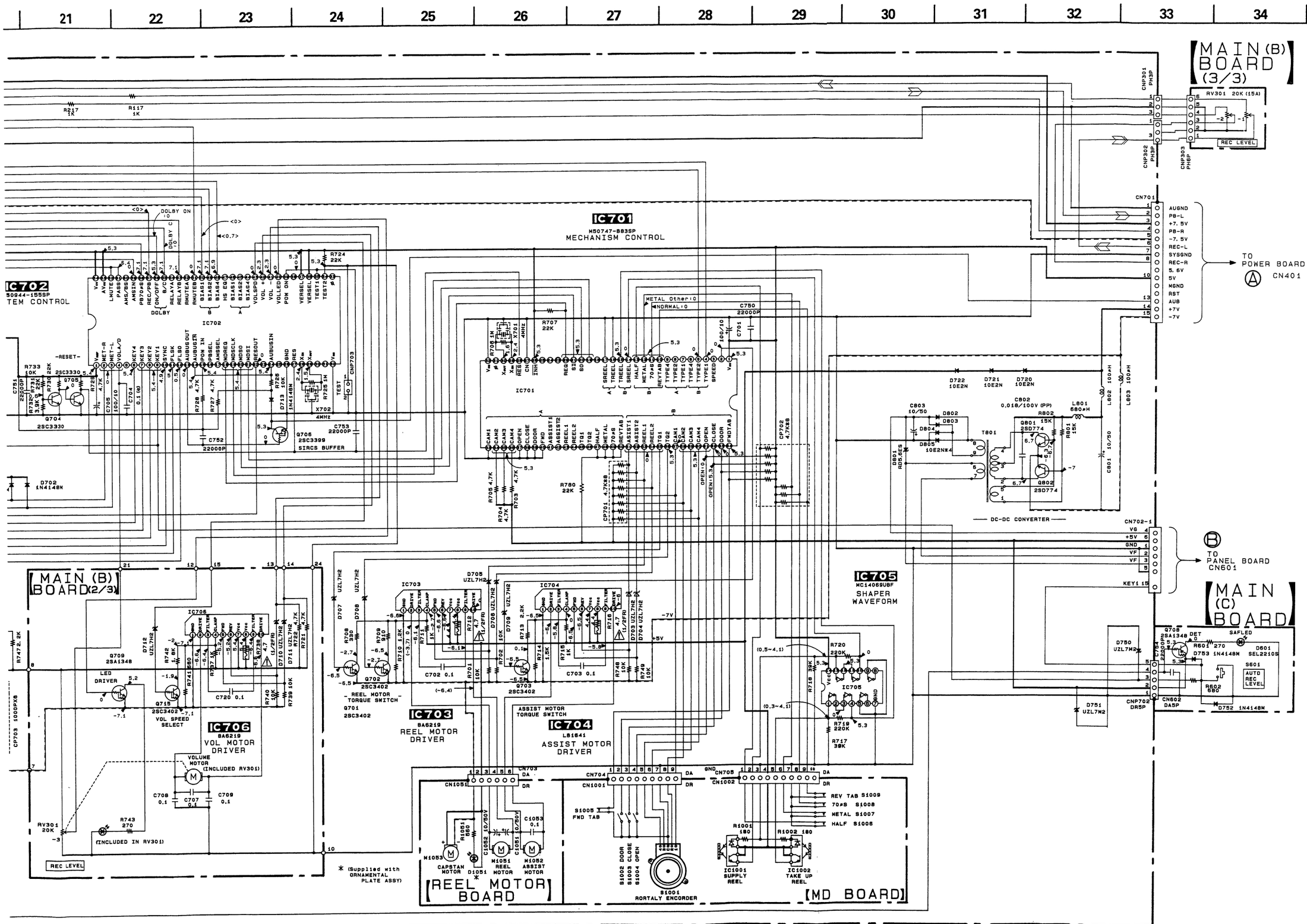
21
22
23
24
25
26
27
28
29
30
31
32
33
34
35
MAIN (B) BOARD (3/3)
IC701
M50747-883SP
MECHANISM CONTROL
IC702
50944-155SP
TEM CONTROL
IC705
MC14069UBF
SHAPER WAVEFORM
IC706
BA6219
VOL MOTOR DRIVER
IC703
BA6219
REEL MOTOR DRIVER
IC704
LB1641
ASSIST MOTOR DRIVER
MAIN (B) BOARD (2/3)
MAIN (C) BOARD
REEL MOTOR BOARD
MD BOARD
TO POWER BOARD CN401
TO PANEL BOARD CN601
DC-DC CONVERTER
SIACS BUFFER
REC LEVEL
AUTO REC LEVEL
SAFLED
LED DRIVER
VOL SPEED SELECT
VOLUME MOTOR (INCLUDED RV301)
(INCLUDED IN RV301)
REEL MOTOR TORQUE SWITCH
ASSIST MOTOR TORQUE SWITCH
CAPSTAN MOTOR
REEL MOTOR
ASSIST MOTOR
ROATALY ENCORDER
SUPPLY REEL
TAKE UP REEL
REV TAB S1009
70#S S1008
METAL S1007
HALF S1006
FWD TAB S1005
S1002 DOOR
S1003 CLOSE
S1004 OPEN
* (Supplied with ORNAMENTAL PLATE ASSY)

• IC BLOCK DIAGRAM

IC501 LA5603

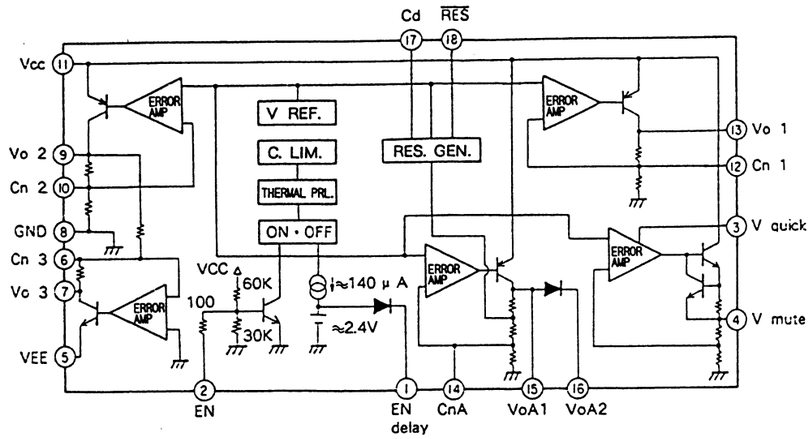

IC407 BA7625

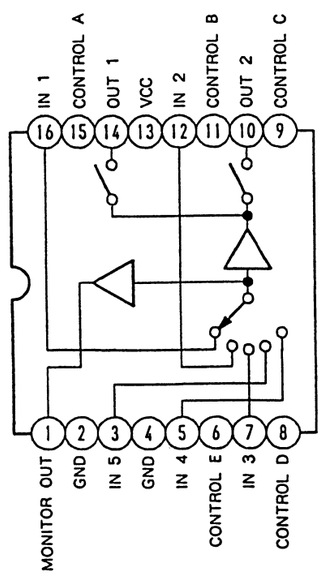

Note on Schematic Diagram:

- All capacitors are in μF unless otherwise noted. pF: μμF 50WV or less are not indicated except for electrolytics and tantalums.
- All resistors are in Ω and 1/4W or less unless otherwise specified.
- : fusible resistor.

Note:
The components identified by mark ⚠ or dotted line with mark ⚠ are critical for safety. Replace only with part number specified.

- : B+ Line
- : B− Line
- : adjustment for repair.
  no mark : STOP
  ( ) : PB
  < > : REC
- Voltages are taken with a VOM (50 kΩ/V). Voltage variations may be noted due to normal production tolerances.
- Signal path.
  : PB
  : REC

5-7. SCHEMATIC DIAGRAM – PIN JACK SECTION –

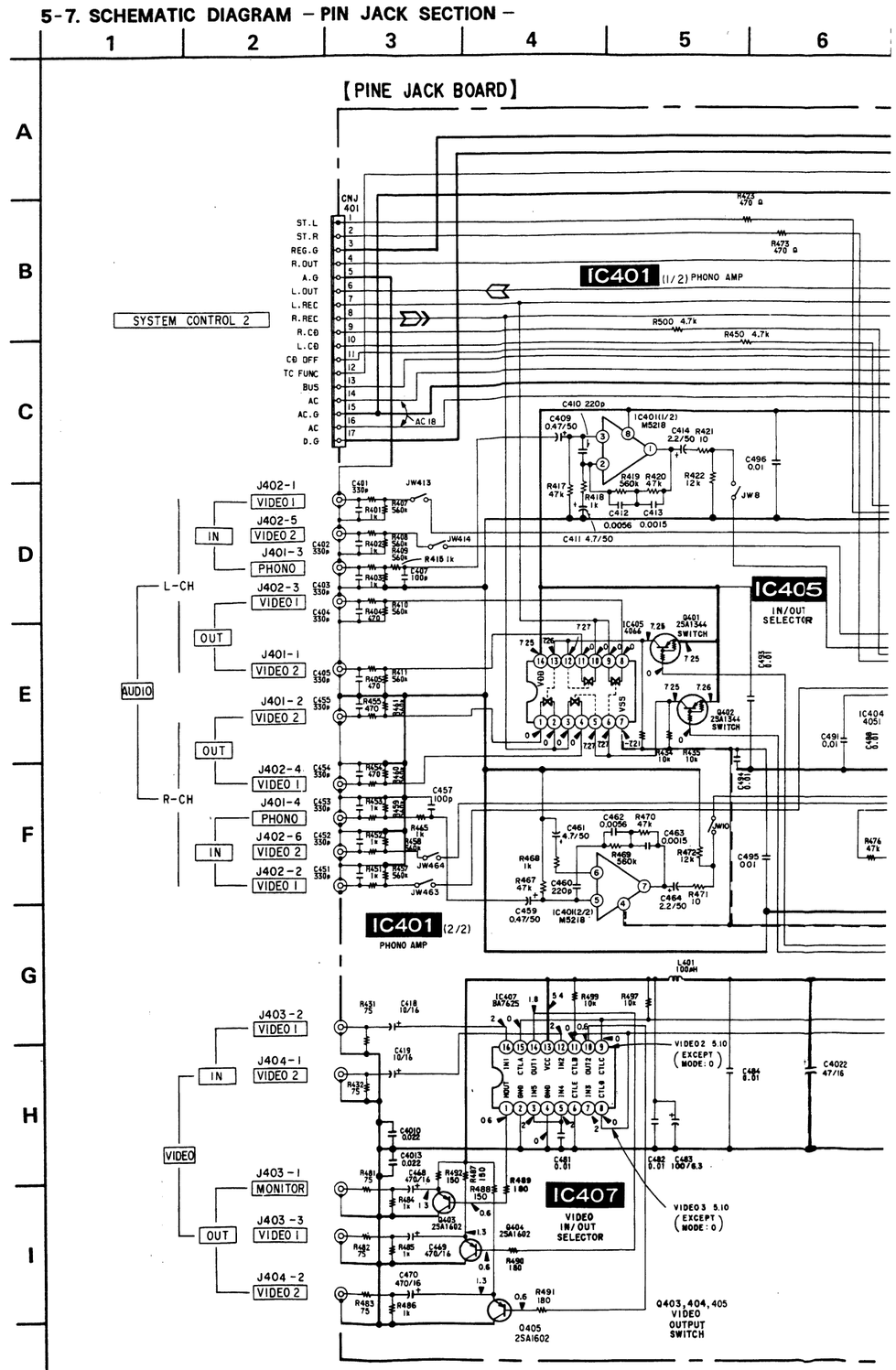

SONY-04687 / Druck 8

SCHEMATIC DIAGRAM – PIN JACK SECTION –

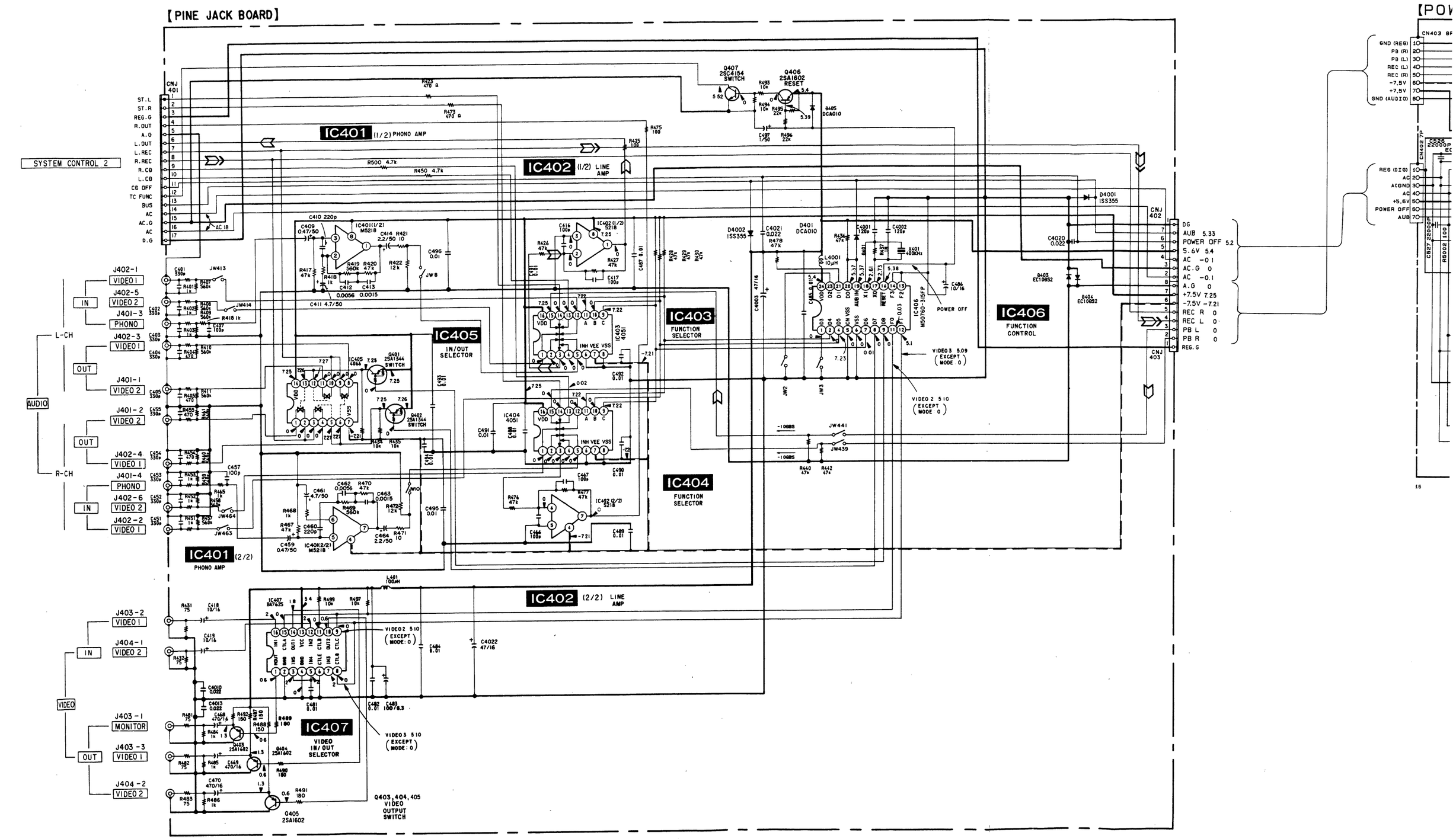

SONY-04687 / Druck 9

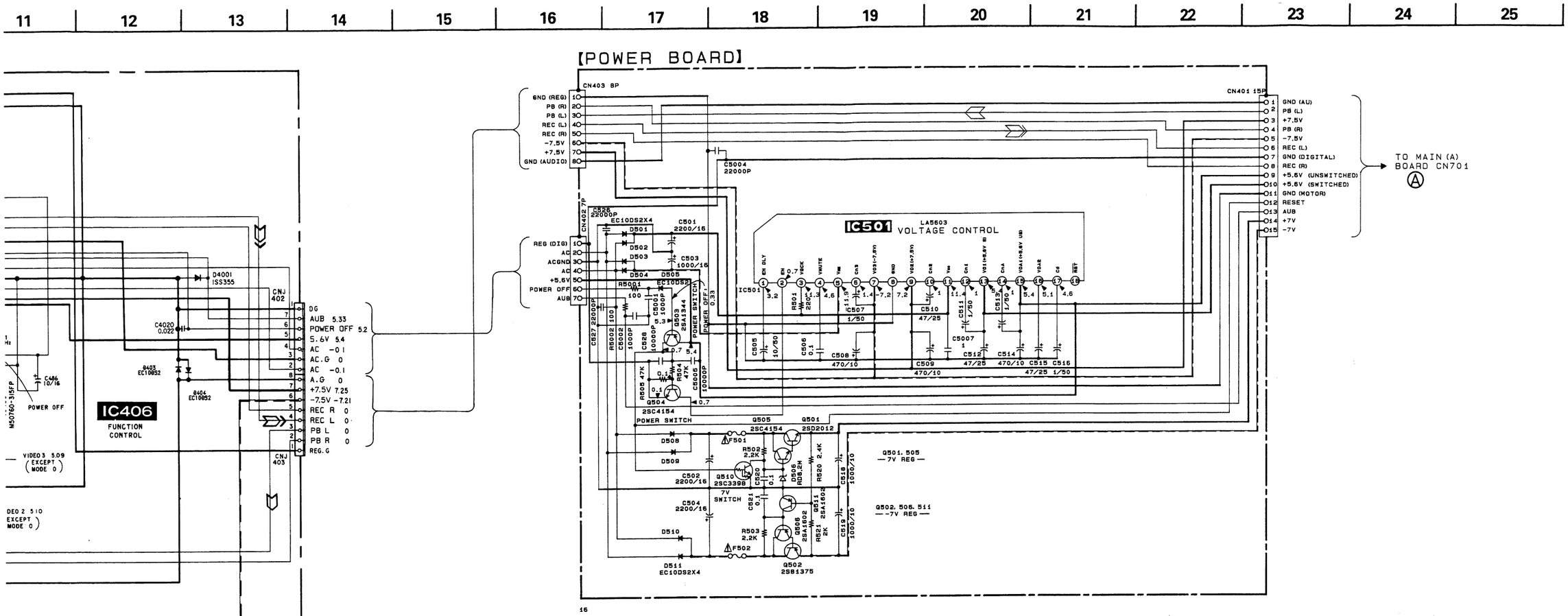

SONY-04687 / Druck 10

5-8. PRINTED WIRING BOARDS – PIN JACK SECTION –

【PIN JACK BOARD】

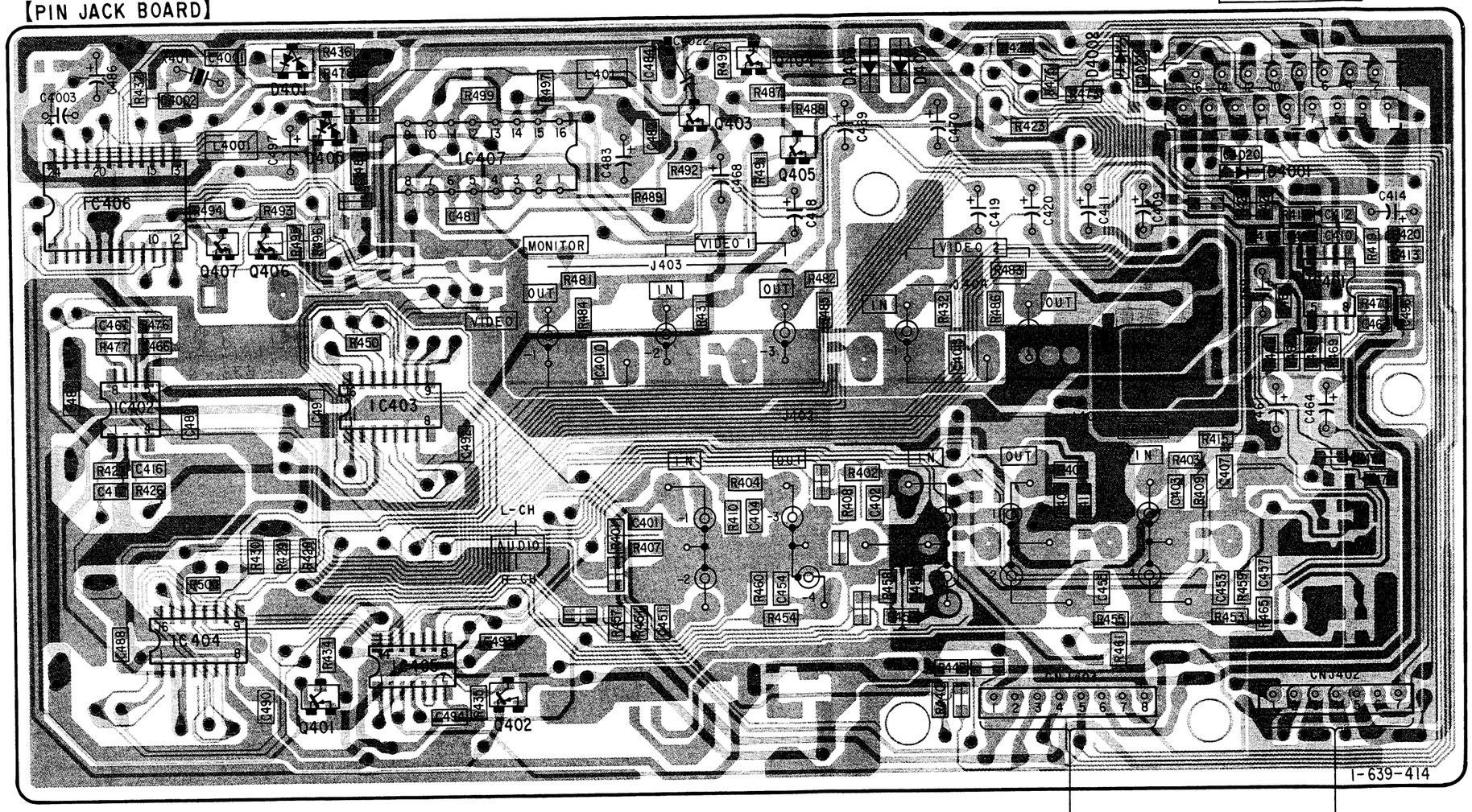

【POWER BOARD】

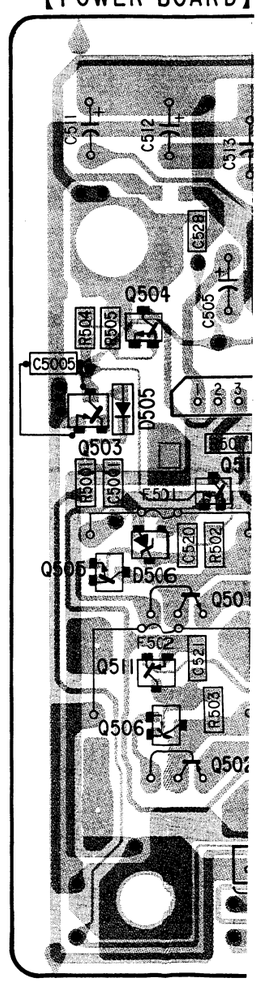

SONY-04687 / Druck 11

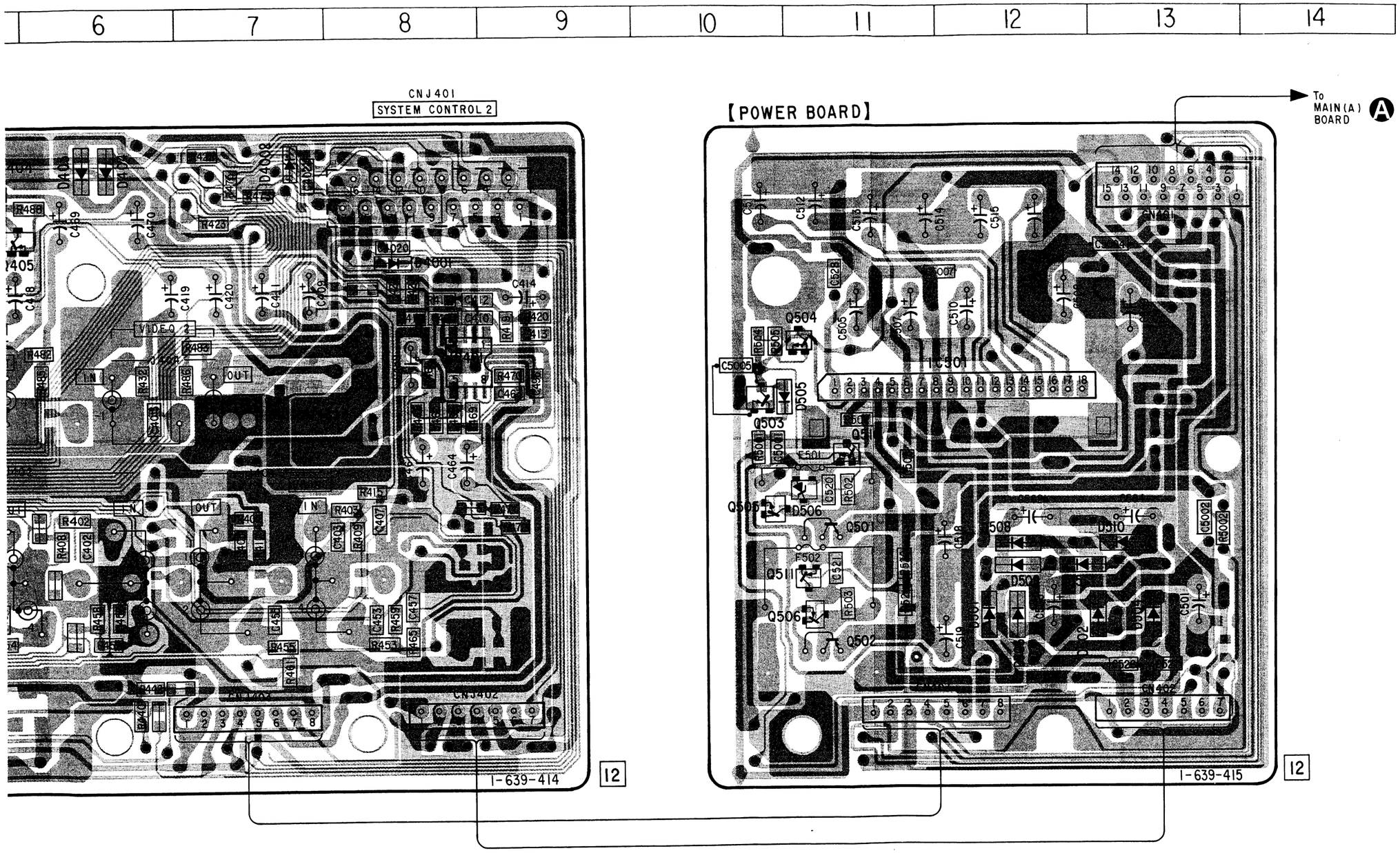

• Semiconductor Location

Ref. No.	Location
D401	A-3
D403	A-6
D404	A-6
D405	B-3
D501	D-12
D502	D-13
D503	D-12
D504	D-13
D505	C-11
D506	C-11
D508	D-12
D509	D-12
D510	D-13
D511	D-12
D4001	B-8
D4002	A-7
IC401	C-8
IC402	C-2
IC403	C-3
IC404	E-2
IC405	E-3
IC406	B-2
IC407	B-4
IC501	C-12
Q401	E-3
Q402	E-4
Q403	B-5
Q404	A-5
Q405	B-5
Q406	B-2
Q407	B-2
Q501	D-11
Q502	D-11
Q503	C-10
Q504	B-11
Q505	D-10
Q506	D-11
Q510	C-11
Q511	D-11

Note on Mounting Diagram:

- ○—— : parts extracted from the component side.
- ■ : parts mounted on the conductor side.
- ● : Through hole.
- ▒ : Pattern on the side which is seen.
- ▒ : Pattern of the rear side.

SONY-04687 / Druck 12

5-9. PRINTED WIRING BOARDS – PANEL SECTION –

• Semiconductor Location

Ref. No.	Location
D601	A-4
D602	B-1
D603	B-2
IC601	B-5

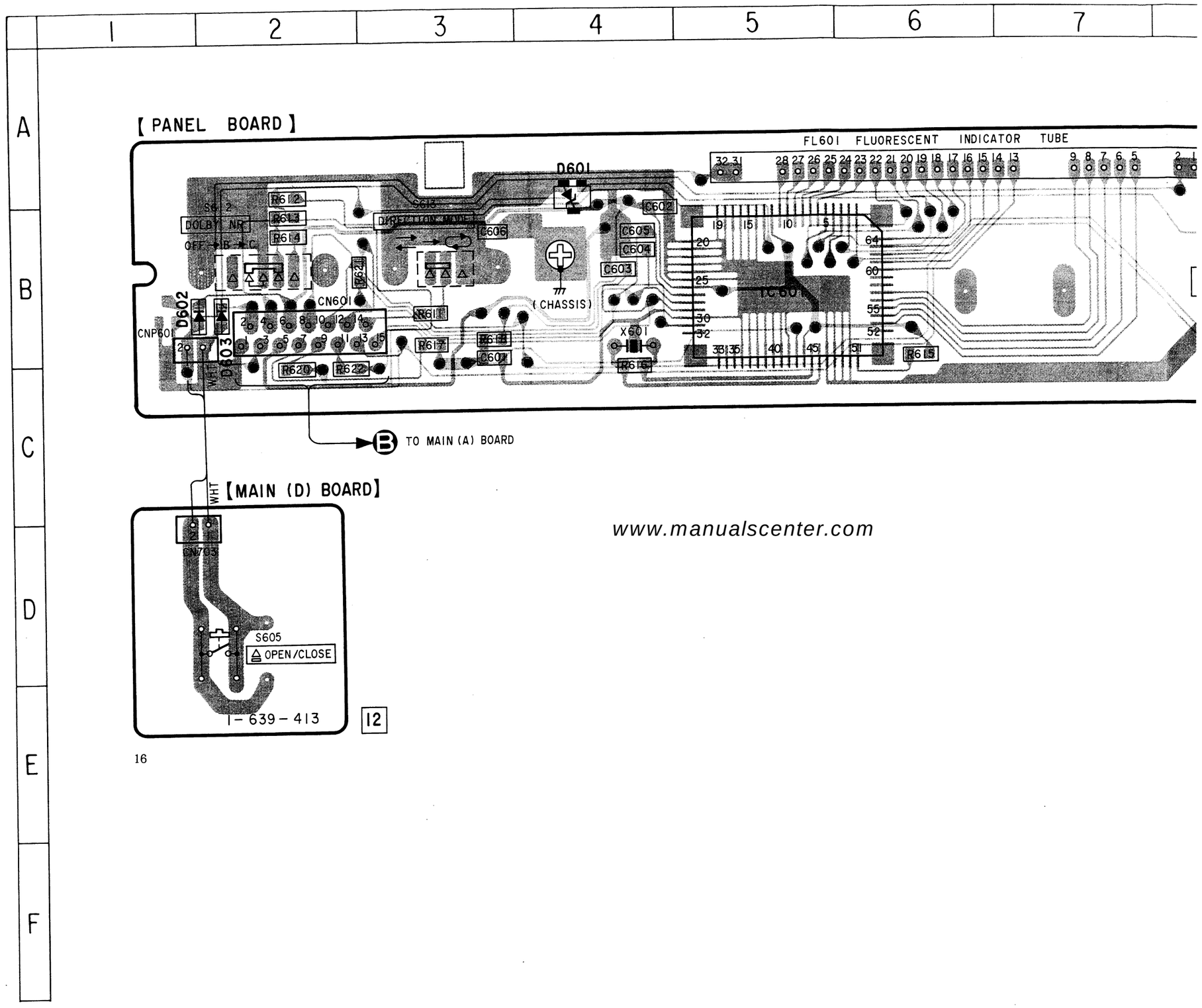

Note on Mounting Diagram:

- o—— : parts extracted from the component side.
- ● : Through hole.
- ▒ : Pattern on the side which is seen.
- ▒ : Pattern of the rear side.

SONY-04687 / Druck 13

3	4	5	6	7	8	9	10	11	12

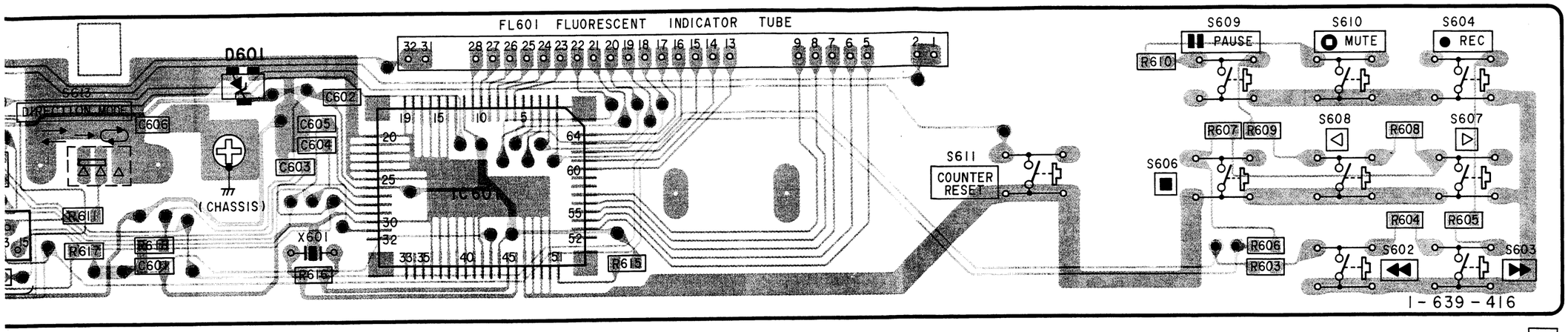

12

TO MAIN (A) BOARD

D]

12

SONY-04687 / Druck 14

5-10. SCHEMATIC DIAGRAM – PANEL SECTION –

• See page 28 for Note on Schematic Diagram.

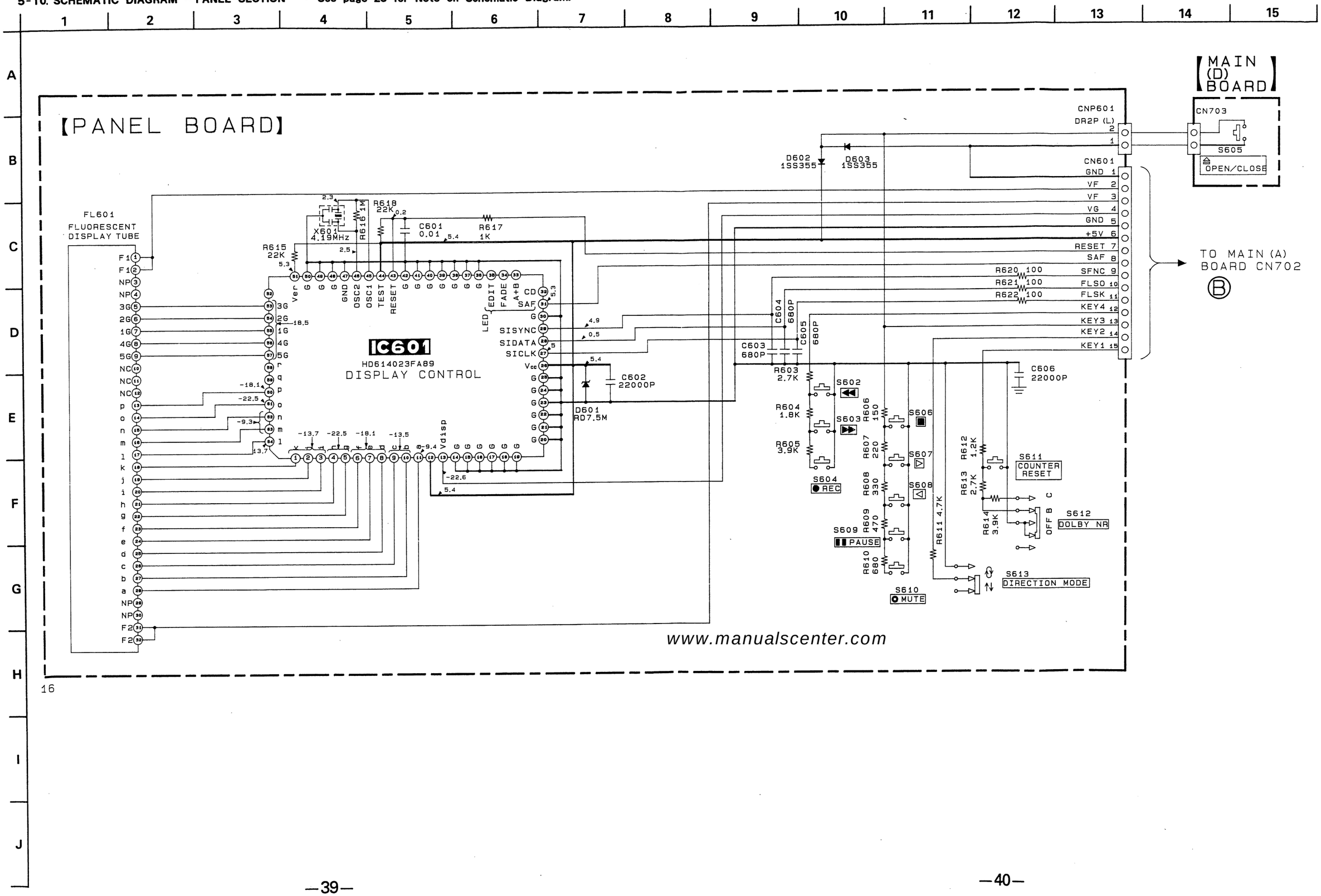

SONY-04687 / Druck 15

SECTION 6
EXPLODED VIEWS

NOTE :
- – XX, – X mean standardized parts, so they may have some differences from the original one.
- Color Indication of Appearance Parts
  Example :
  KNOB, BALANCE (WHITE)...(RED)
  ↑ Parts color ↑ Cabinet's color
- Items marked "*" are not stocked since they are seldom required for routine service. Some delay should be anticipated when ordering these items.
- The mechanical parts with no reference number in the exploded views are not supplied.
- Hardware (# mark) list is given in the last of this parts list.

6-1. FRONT PANEL SECTION

■A : MAIN (A) BOARD
■B : MAIN (B) BOARD
■C : MAIN (C) BOARD
■D : MAIN (D) BOARD

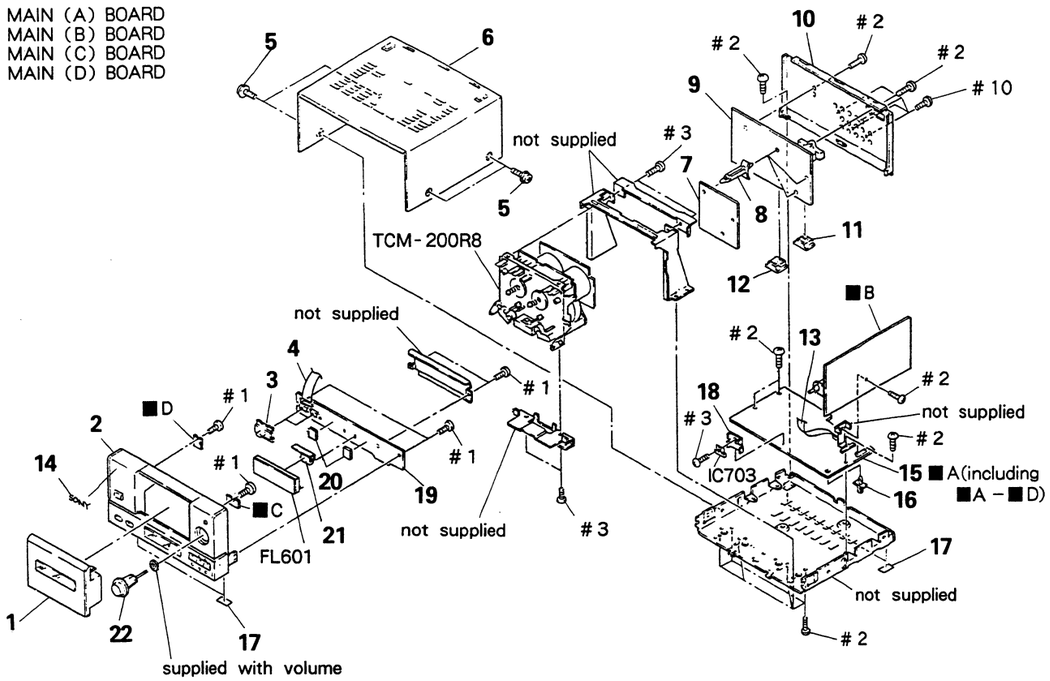

6-2. MECHANISM SECTION-1 (TCM-200R8)

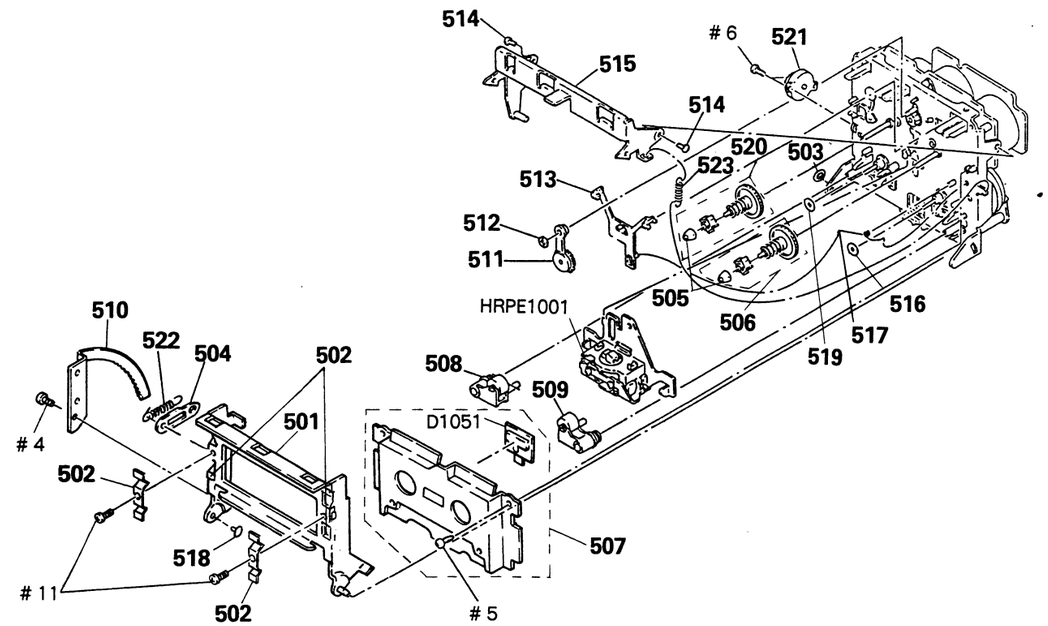

Ref. No.	Part No.	Description	Remarks
1	A-2003-769-A	LID ASSY, CASSETTE	
2	A-2003-768-A	PANEL ASSY, FRONT	
3	3-368-105-01	KNOB (SLIDE)	
4	1-575-906-11	WIRE, FLAT TYPE (15 CORE)	
5	3-363-099-01	SCREW (CASE +3X8 TP2)	
6	4-932-841-01	CASE	
7	* 1-639-415-11	POWER BOARD	
8	* 3-703-353-02	SUPPORT, PC BOARD	
9	* A-2006-548-A	PIN JACK BOARD, COMPLETE	
10	* 3-367-074-01	PANEL, BACK	
11	* 1-573-188-11	CONNECTOR, BRIDGE 7P	
12	* 1-573-389-11	COONECTOR, BRIDGE 8P	
13	1-575-664-11	WIRE, FLAT TYPE (15 CORE)	
14	4-942-636-01	EMBLEM (NO.3.5), SONY	
15	* A-2006-452-A	MAIN BOARD, COMPLETE	
16	* 3-350-847-31	HOLDER, PCB	
17	4-930-336-01	FOOT (FELT)	
18	* 3-356-925-01	HEAT SINK	
19	* A-2006-453-A	PANEL BOARD, COMPLETE	
20	* 4-921-941-01	CUSHION (FL)	
21	* 3-368-109-01	HOLDER, FL TUBE	
22	A-2003-767-A	KNOB (REC VOL) ASSY	
FL601	1-519-656-11	INDICATOR TUBE, FLUORESCENT	
IC703	8-759-973-95	IC BA6219B	

Ref. No.	Part No.	Description	Remarks
501	X-3362-956-1	HOLDER ASSY, CASSETTE	
502	3-354-908-01	SPRING (CASSETTE RETAINER)	
503	3-558-708-21	WASHER, STOPPER	
504	* 3-356-717-01	LEVER (JOINT)	
505	3-362-308-01	CAP (REEL)	
506	X-3356-627-1	GEAR (T) ASSY	
507	X-3356-613-1	PLATE ASSY, ORNAMENTAL	
508	X-3343-455-1	LEVER (PINCH F) ASSY	
509	X-3343-456-1	LEVER (PINCH R) ASSY	
510	X-3362-957-1	GEAR ASSY, LOADING	
511	X-3356-641-1	LEVER (FR2) ASSY	
512	3-669-465-11	WASHER (1.5), STOPPER	
513	3-356-614-01	SLIDER (BRAKE)	
514	3-356-601-11	SCREW, STEP	
515	* X-3356-608-1	LEVER (LIFTER) ASSY	
516	3-356-713-01	WASHER	
517	3-356-619-01	SPRING (B), TORSION	
518	3-356-710-01	SHAFT (LEFT) (CASSETTE HOLDER)	
519	3-356-714-01	WASHER	
520	X-3356-628-1	GEAR (S) ASSY	
521	3-712-786-01	DAMPER, OIL	
522	3-356-626-01	SPRING, TENSION	
523	3-356-625-01	SPRING, TENSION	
D1051	8-719-980-85	DIODE SLF-325C	
HRPE1001	A-2003-772-A	BASE ASSY, HEAD	

SONY-04687 / Druck 16

6-3. MECHANISM SECTION-2 (TCM-200R8)

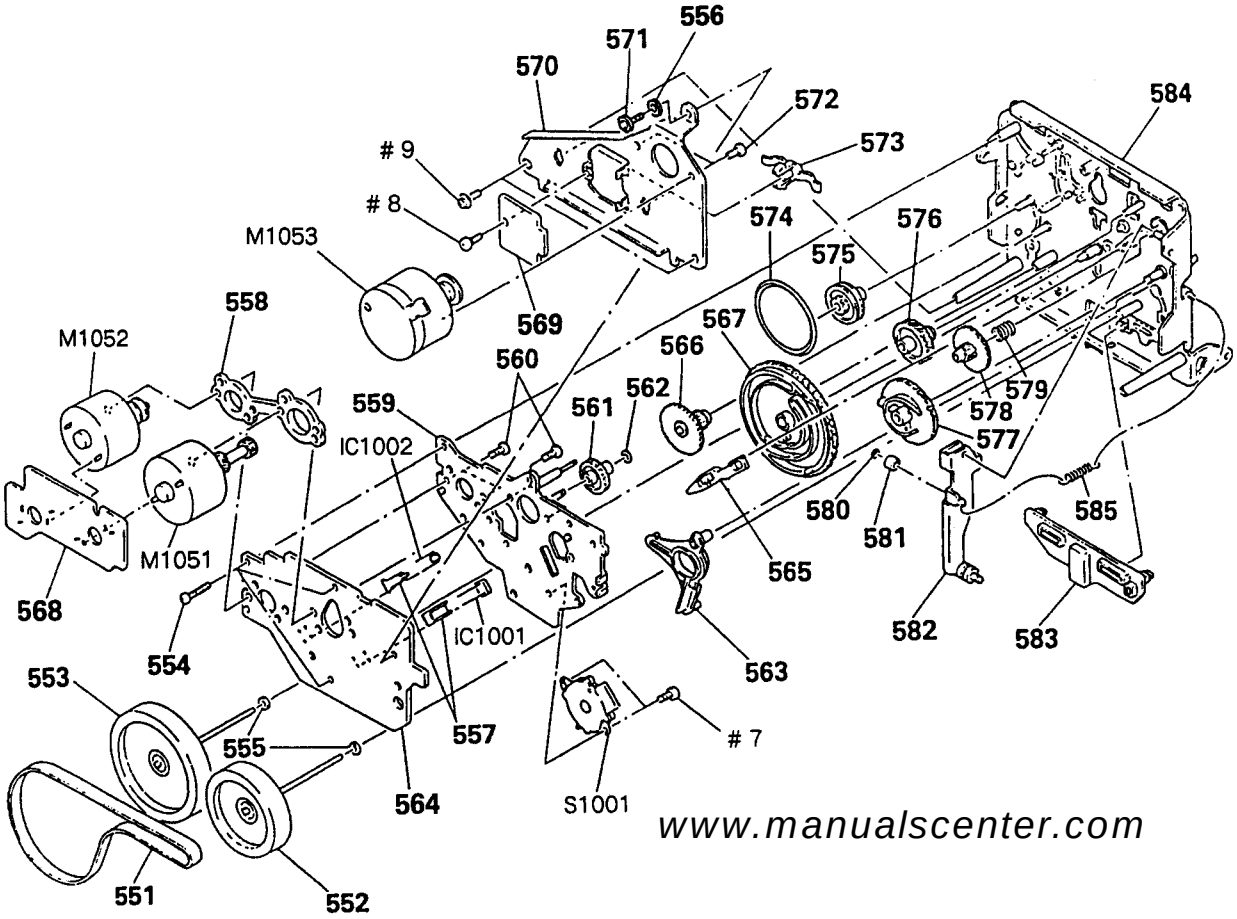

Ref. No.	Part No.	Description	Remarks
551	3-356-730-01	BELT (CAPSTAN R2)	
552	X-3356-642-1	FLYWHEEL (R FWD) ASSY	
553	X-3356-643-1	FLYWHEEL (R REV) ASSY	
554	3-355-801-01	SCREW (BTP 2X18)	
555	3-356-705-01	WASHER (CAPSTAN)	
556	* 3-356-718-01	SPACER (THRUST RETAINER R)	
557	3-356-631-01	HOLDER (SENSOR)	
558	* 3-356-628-01	SPACER (MOTOR)	
559	* X-3356-602-4	BRACKET (MOTOR R) ASSY	
560	3-363-804-01	SCREW (+P 2.6X6.5)	
561	3-356-702-01	GEAR (COMMUNICATION B)	
562	3-669-465-00	WASHER (1.5), STOPPER	
563	3-356-613-01	LEVER (MODE)	
564	* 1-632-740-11	MD BOARD	
565	3-356-617-01	LEVER (SELECTION)	
566	3-356-606-01	GEAR (MODE)	
567	3-356-615-01	GEAR (MODE CAM RR)	
568	* 1-632-741-11	REEL MOTOR BOARD	
569	* 1-634-323-11	TRANSLATION BOARD	
570	* 3-356-629-01	BRACKET (THRUST RETAINER R)	

Ref. No.	Part No.	Description	Remarks
571	3-356-707-01	SCREW (+PTPWH 2X25)	
572	4-885-599-00	SCREW, FITTING, REINFORCEMENT	
573	3-575-321-00	RETAINER, THRUST, CAPSTAN	
574	3-356-603-01	BELT (MODE)	
575	3-356-607-01	PULLEY (MODE)	
576	3-356-703-01	GEAR (COMMUNICATION C)	
577	3-356-616-01	GEAR (LOADING CAM)	
578	3-356-609-01	GEAR (LOADING)	
579	3-356-605-01	SPRING, COMPRESSION	
580	3-558-708-11	WASHER, STOPPER	
581	3-356-630-01	ROLLER (LOADING)	
582	* X-3356-606-1	LEVER (LOADING) ASSY	
583	3-356-612-01	SLIDER (REVERSE)	
584	X-3356-634-1	CHASSIS (R2)COMPLETE ASSY,MECH	
585	3-356-624-01	SPRING, TENSION	
IC1001	8-749-920-97	IC PHOTO REFLECTOR GP2S22B	
IC1002	8-749-920-97	IC PHOTO REFLECTOR GP2S22B	
M1051	X-3356-638-1	MOTOR (REEL R) ASSY	
M1052	X-3356-604-1	MOTOR (ASSIST) ASSY	
M1053	X-3356-635-1	MOTOR (CAPSTAN R2) ASSY	
S1001	1-466-525-11	ENCODER, ROTARY	

MAIN

SECTION 7
ELECTRICAL PARTS LIST

NOTE :

The components identified by mark ⚠ or dotted line with mark ⚠ are critical for safety.
Replace only with part number specified.

When indicating parts by reference number, please include the board name.

- Due to standardization, replacements in the parts list may be defferent from the parts specified in the diagrams or the components used on the set.
- −XX, −X mean standardized parts, so they may have some difference from the original one.
- RESISTORS
  All resistors are in ohms.
  METAL : metal-film resistor
  METAL OXIDE : Metal Oxide-film resistor
  F : nonflammable
- Items marked "*" are not stocked since they are seldom required for routine service. Some delay should be anticipated when ordering these items.
- SEMICONDUCTORS
  In each case, u : μ, for example :
  uA... : μA... , uPA... , μPA... , uPB... , μPB... , uPC... , μPC... , uPD..., μPD...
- CAPACITORS :
  uF : μF
- COILS
  uH : μH

Ref. No.	Part No.	Description				Remarks
	* A-2006-452-A	MAIN BOARD, COMPLETE				
		**********				
	* 1-573-496-11	HOUSING, CONNECTOR 12P				
	* 1-573-497-11	PIN, CONNECTOR (PC BOARD) 12P				
	* 3-356-925-01	HEAT SINK				
	7-682-547-04	SCREW +BVTT 3X6 (S)				
		〈 CAPACITOR 〉				
C101	1-162-294-31	CERAMIC	0.001uF	10%	50V	
C102	1-136-157-00	FILM	0.022uF	5%	50V	
C103	1-124-282-00	ELECT	22uF	20%	25V	
C105	1-136-158-00	FILM	0.027uF	5%	50V	
C106	1-162-294-31	CERAMIC	0.001uF	10%	50V	
C107	1-124-907-11	ELECT	10uF	20%	50V	
C108	1-126-233-11	ELECT	22uF	20%	50V	
C109	1-130-475-00	MYLAR	0.0022uF	5%	50V	
C110	1-130-475-00	MYLAR	0.0022uF	5%	50V	
C111	1-136-174-00	FILM	0.56uF	5%	50V	
C112	1-136-171-00	FILM	0.33uF	5%	50V	
C113	1-124-907-11	ELECT	10uF	20%	50V	
C114	1-124-902-00	ELECT	0.47uF	20%	50V	
C115	1-124-927-11	ELECT	4.7uF	20%	100V	
C116	1-124-927-11	ELECT	4.7uF	20%	100V	
C117	1-124-925-11	ELECT	2.2uF	20%	100V	
C118	1-162-285-31	CERAMIC	180PF	10%	50V	
C119	1-136-935-11	FILM	22PF	5%	630V	
C120	1-130-468-00	MYLAR	560PF	5%	50V	
C121	1-136-433-11	FILM	100PF	5%	630V	
C122	1-136-272-00	FILM	68PF	5%	630V	
C123	1-136-153-00	FILM	0.01uF	5%	50V	
C124	1-136-165-00	FILM	0.1uF	5%	50V	
C125	1-136-157-00	FILM	0.022uF	5%	50V	
C201	1-162-294-31	CERAMIC	0.001uF	10%	50V	
C202	1-136-157-00	FILM	0.022uF	5%	50V	
C203	1-124-282-00	ELECT	22uF	20%	25V	
C205	1-136-158-00	FILM	0.027uF	5%	50V	
C206	1-162-294-31	CERAMIC	0.001uF	10%	50V	
C207	1-124-907-11	ELECT	10uF	20%	50V	
C208	1-126-233-11	ELECT	22uF	20%	50V	
C209	1-130-475-00	MYLAR	0.0022uF	5%	50V	
C210	1-130-475-00	MYLAR	0.0022uF	5%	50V	
C211	1-136-174-00	FILM	0.56uF	5%	50V	
C212	1-136-171-00	FILM	0.33uF	5%	50V	
C213	1-124-907-11	ELECT	10uF	20%	50V	
C214	1-124-902-00	ELECT	0.47uF	20%	50V	
C215	1-124-927-11	ELECT	4.7uF	20%	100V	
C216	1-124-927-11	ELECT	4.7uF	20%	100V	
C217	1-124-925-11	ELECT	2.2uF	20%	100V	
C218	1-162-285-31	CERAMIC	180PF	10%	50V	
C219	1-136-935-11	FILM	22PF	5%	630V	
C220	1-130-468-00	MYLAR	560PF	5%	50V	
C221	1-136-433-11	FILM	100PF	5%	630V	
C222	1-136-272-00	FILM	68PF	5%	630V	
C223	1-136-153-00	FILM	0.01uF	5%	50V	
C224	1-136-165-00	FILM	0.1uF	5%	50V	
C225	1-136-157-00	FILM	0.022uF	5%	50V	
C301	1-124-443-00	ELECT	100uF	20%	10V	
C302	1-124-443-00	ELECT	100uF	20%	10V	
C303	1-124-907-11	ELECT	10uF	20%	50V	
C304	1-124-907-11	ELECT	10uF	20%	50V	
C305	1-124-478-11	ELECT	100uF	20%	25V	
C306	1-124-925-11	ELECT	2.2uF	20%	100V	
C307	1-124-902-00	ELECT	0.47uF	20%	50V	
C308	1-162-215-31	CERAMIC	47PF	5%	50V	
C309	1-161-494-00	CERAMIC	0.022uF		25V	
C310	1-162-286-31	CERAMIC	220PF	10%	50V	
C311	1-124-925-11	ELECT	2.2uF	20%	100V	
C312	1-124-477-11	ELECT	47uF	20%	25V	

Ref. No.	Part No.	Description				Remarks
C313	1-124-902-00	ELECT	0.47uF	20%	50V	
C314	1-124-478-11	ELECT	100uF	20%	25V	
C315	1-124-478-11	ELECT	100uF	20%	25V	
C316	1-130-856-00	FILM	0.0068uF	5%	100V	
C317	1-136-230-00	FILM	0.0022uF	5%	100V	
C318	1-136-230-00	FILM	0.0022uF	5%	100V	
C319	1-124-907-11	ELECT	10uF	20%	50V	
C320	1-161-494-00	CERAMIC	0.022uF	5%	25V	
C321	1-136-558-11	FILM	0.0039uF	5%	630V	
C322	1-107-046-00	MICA	4.7PF		500V	
C701	1-124-443-00	ELECT	100uF	20%	10V	
C702	1-164-159-11	CERAMIC	0.1uF		50V	
C703	1-164-159-11	CERAMIC	0.1uF		50V	
C704	1-164-159-11	CERAMIC	0.1uF		50V	
C705	1-124-443-00	ELECT	100uF	20%	10V	
C706	1-124-925-11	ELECT	2.2uF	20%	100V	
C707	1-164-159-11	CERAMIC	0.1uF		50V	
C708	1-136-165-00	FILM	0.1uF	5%	50V	
C709	1-136-165-00	FILM	0.1uF	5%	50V	
C720	1-164-159-11	CERAMIC	0.1uF		50V	
C750	1-161-494-00	CERAMIC	0.022uF		25V	
C751	1-161-494-00	CERAMIC	0.022uF		25V	
C752	1-161-494-00	CERAMIC	0.022uF		25V	
C753	1-161-494-00	CERAMIC	0.022uF		25V	
C754	1-161-494-00	CERAMIC	0.022uF		25V	
C801	1-124-907-11	ELECT	10uF	20%	50V	
C802	1-136-594-11	FILM	0.018uF	5%	100V	
C803	1-124-907-11	ELECT	10uF	20%	50V	
		(CONNECTOR)				
CN701	* 1-568-834-11	SOCKET, CONNECTOR 15P				
CN702	* 1-568-834-11	SOCKET, CONNECTOR 15P				
CNP301	* 1-564-705-11	PIN, CONNECTOR (SMALL TYPE) 3P				
CNP302	* 1-564-705-11	PIN, CONNECTOR (SMALL TYPE) 3P				
CNP303	* 1-564-708-11	PIN, CONNECTOR (SMALL TYPE) 6P				
CNP304	* 1-564-511-11	PLUG, CONNECTOR 8P				
CNP305	* 1-564-518-11	PLUG, CONNECTOR 3P				
CNP702	* 1-564-339-00	PIN, CONNECTOR 5P				
CNP703	* 1-564-505-11	PLUG, CONNECTOR 2P				
		(COMPOSITION CIRCUIT BLOCK)				
CP701	1-233-199-11	COMPOSITION CIRCUIT BLOCK				
CP702	1-233-199-11	COMPOSITION CIRCUIT BLOCK				
CP703	1-232-944-11	COMPOSITION CIRCUIT BLOCK				

Ref. No.	Part No.	Description		Remarks
		(DIODE)		
D101	8-719-912-20	DIODE	1SS120	
D201	8-719-912-20	DIODE	1SS120	
D301	8-719-912-20	DIODE	1SS120	
D302	8-719-912-20	DIODE	1SS120	
D303	8-719-912-20	DIODE	1SS120	
D304	8-719-933-50	DIODE	HZS7C2L	
D305	8-719-912-20	DIODE	1SS120	
D306	8-719-912-20	DIODE	1SS120	
D307	8-719-912-20	DIODE	1SS120	
D308	8-719-912-20	DIODE	1SS120	
D309	8-719-912-20	DIODE	1SS120	
D601	8-719-301-38	DIODE	SEL2210S-C(AUTO REC LEVEL)	
D701	8-719-912-20	DIODE	1SS120	
D702	8-719-912-20	DIODE	1SS120	
D703	8-719-933-50	DIODE	HZS7C2L	
D704	8-719-933-50	DIODE	HZS7C2L	
D705	8-719-933-50	DIODE	HZS7C2L	
D706	8-719-933-50	DIODE	HZS7C2L	
D707	8-719-933-50	DIODE	HZS7C2L	
D708	8-719-933-50	DIODE	HZS7C2L	
D709	8-719-933-50	DIODE	HZS7C2L	
D710	8-719-933-50	DIODE	HZS7C2L	
D711	8-719-933-50	DIODE	HZS7C2L	
D712	8-719-933-50	DIODE	HZS7C2L	
D713	8-719-912-20	DIODE	1SS120	
D714	8-719-912-20	DIODE	1SS120	
D720	8-719-200-77	DIODE	10E2N	
D721	8-719-200-77	DIODE	10E2N	
D722	8-719-200-77	DIODE	10E2N	
D750	8-719-933-47	DIODE	HZS7B2L	
D751	8-719-933-47	DIODE	HZS7B2L	
D752	8-719-912-20	DIODE	1SS120	
D753	8-719-912-20	DIODE	1SS120	
D801	8-719-109-89	DIODE	RD5.6ESB2	
D802	8-719-200-77	DIODE	10E2N	
D803	8-719-200-77	DIODE	10E2N	
D804	8-719-200-77	DIODE	10E2N	
D805	8-719-200-77	DIODE	10E2N	

MAIN

Ref. No.	Part No.	Description		Remarks
		< IC >		
IC301	8-759-111-44	IC	uPC4570C-1	
IC302	8-752-036-34	IC	CXA1330S	
IC303	8-752-038-02	IC	CXA1198AP	
IC304	8-759-945-58	IC	RC4558P	
IC305	8-759-945-58	IC	RC4558P	
IC306	8-759-106-56	IC	uPC1297CA	
IC701	8-759-633-86	IC	M50747-B83SP	
IC702	8-759-634-79	IC	M50944-155SP	
IC703	8-759-973-95	IC	BA6219B	
IC704	8-759-822-09	IC	LB1641	
IC705	8-759-240-69	IC	TC4069UBP	
IC706	8-759-822-09	IC	LB1641	
		< COIL >		
L101	1-410-780-11	INDUCTOR	27mH	
L201	1-410-780-11	INDUCTOR	27mH	
L301	1-408-080-00	INDUCTOR	100uH	
L801	1-410-761-11	INDUCTOR	0.68mH	
L802	1-408-575-11	INDUCTOR	100uH	
L803	1-408-575-11	INDUCTOR	100uH	
		< FILTER >		
LPF101	1-236-087-11	FILTER, LOW PASS		
LPF201	1-236-087-11	FILTER, LOW PASS		
		< TRANSISTOR >		
Q101	8-729-900-89	TRANSISTOR	DTC144ES	
Q102	8-729-900-74	TRANSISTOR	DTC143TS	
Q103	8-729-821-31	TRANSISTOR	2SD1012-FG	
Q201	8-729-900-89	TRANSISTOR	DTC144ES	
Q202	8-729-900-74	TRANSISTOR	DTC143TS	
Q203	8-729-821-31	TRANSISTOR	2SD1012-FG	
Q301	8-729-900-65	TRANSISTOR	DTA144ES	
Q302	8-729-900-89	TRANSISTOR	DTC144ES	
Q303	8-729-900-89	TRANSISTOR	DTC144ES	
Q304	8-729-820-24	TRANSISTOR	2SC3330-T	
Q305	8-729-900-89	TRANSISTOR	DTC144ES	
Q306	8-729-821-04	TRANSISTOR	2SA1317-STU	
Q307	8-729-900-65	TRANSISTOR	DTA144ES	
Q308	8-729-900-65	TRANSISTOR	DTA144ES	
Q309	8-729-900-89	TRANSISTOR	DTC144ES	
Q310	8-729-900-65	TRANSISTOR	DTA144ES	
Q311	8-729-900-61	TRANSISTOR	DTA114ES	
Q312	8-729-900-80	TRANSISTOR	DTC114ES	
Q313	8-729-900-80	TRANSISTOR	DTC114ES	
Q314	8-729-900-80	TRANSISTOR	DTC114ES	
Q315	8-729-821-04	TRANSISTOR	2SA1317-STU	
Q316	8-729-194-57	TRANSISTOR	2SC945-P	
Q317	8-729-194-57	TRANSISTOR	2SC945-P	
Q318	8-729-900-65	TRANSISTOR	DTA144ES	
Q701	8-729-900-80	TRANSISTOR	DTC114ES	
Q702	8-729-900-80	TRANSISTOR	DTC114ES	
Q703	8-729-900-80	TRANSISTOR	DTC114ES	
Q704	8-729-820-24	TRANSISTOR	2SC3330-T	
Q705	8-729-820-24	TRANSISTOR	2SC3330-T	
Q706	8-729-900-89	TRANSISTOR	DTC144ES	
Q707	8-729-821-04	TRANSISTOR	2SA1317-STU	
Q708	8-729-900-61	TRANSISTOR	DTA114ES	
Q709	8-729-900-61	TRANSISTOR	DTA114ES	
Q712	8-729-900-65	TRANSISTOR	DTA144ES	
Q713	8-729-900-65	TRANSISTOR	DTA144ES	
Q715	8-729-900-80	TRANSISTOR	DTC114ES	
Q801	8-729-140-96	TRANSISTOR	2SD774-34	
Q802	8-729-140-96	TRANSISTOR	2SD774-34	
		< RESISTOR >		
R101	1-249-435-11	CARBON	33K 5% 1/4W	
R102	1-249-403-11	CARBON	68 5% 1/4W	
R103	1-247-882-11	CARBON	130K 5% 1/4W	
R104	1-249-426-11	CARBON	5.6K 5% 1/4W	
R105	1-249-420-11	CARBON	1.8K 5% 1/4W	
R107	1-247-887-00	CARBON	220K 5% 1/4W	
R108	1-247-840-00	CARBON	2.4K 5% 1/4W	
R110	1-249-423-11	CARBON	3.3K 5% 1/4W	
R111	1-249-428-11	CARBON	8.2K 5% 1/4W	
R112	1-247-864-11	CARBON	24K 5% 1/4W	
R113	1-249-414-11	CARBON	560 5% 1/4W	
R114	1-249-417-11	CARBON	1K 5% 1/4W	
R115	1-247-846-11	CARBON	4.3K 5% 1/4W	
R116	1-249-423-11	CARBON	3.3K 5% 1/4W	
R117	1-249-417-11	CARBON	1K 5% 1/4W	

Ref. No.	Part No.	Description				Remarks
R118	1-249-429-11	CARBON	10K	5%	1/4W	
R119	1-249-425-11	CARBON	4.7K	5%	1/4W	
R120	1-249-421-11	CARBON	2.2K	5%	1/4W	
R121	1-249-429-11	CARBON	10K	5%	1/4W	
R122	1-249-425-11	CARBON	4.7K	5%	1/4W	
R124	1-249-429-11	CARBON	10K	5%	1/4W	
R125	1-249-437-11	CARBON	47K	5%	1/4W	
R126	1-249-431-11	CARBON	15K	5%	1/4W	
R127	1-249-409-11	CARBON	220	5%	1/4W	
R128	1-249-428-11	CARBON	8.2K	5%	1/4W	
R129	1-247-883-00	CARBON	150K	5%	1/4W	
R130	1-249-393-11	CARBON	10	5%	1/4W	
R131	1-249-432-11	CARBON	18K	5%	1/4W	
R132	1-249-439-11	CARBON	10K	5%	1/4W	
R201	1-249-435-11	CARBON	33K	5%	1/4W	
R202	1-249-403-11	CARBON	68	5%	1/4W	
R203	1-247-882-11	CARBON	130K	5%	1/4W	
R204	1-249-426-11	CARBON	5.6K	5%	1/4W	
R205	1-249-420-11	CARBON	1.8K	5%	1/4W	
R207	1-247-887-00	CARBON	220K	5%	1/4W	
R208	1-247-840-00	CARBON	2.4K	5%	1/4W	
R210	1-249-423-11	CARBON	3.3K	5%	1/4W	
R211	1-249-428-11	CARBON	8.2K	5%	1/4W	
R212	1-247-864-11	CARBON	24K	5%	1/4W	
R213	1-249-414-11	CARBON	560	5%	1/4W	
R215	1-247-846-11	CARBON	4.3K	5%	1/4W	
R216	1-249-423-11	CARBON	3.3K	5%	1/4W	
R217	1-249-417-11	CARBON	1K	5%	1/4W	
R218	1-249-429-11	CARBON	10K	5%	1/4W	
R219	1-249-425-11	CARBON	4.7K	5%	1/4W	
R220	1-249-421-11	CARBON	2.2K	5%	1/4W	
R221	1-249-429-11	CARBON	10K	5%	1/4W	
R222	1-249-425-11	CARBON	4.7K	5%	1/4W	
R224	1-249-429-11	CARBON	10K	5%	1/4W	
R225	1-249-437-11	CARBON	47K	5%	1/4W	
R226	1-249-431-11	CARBON	15K	5%	1/4W	
R227	1-249-409-11	CARBON	220	5%	1/4W	
R228	1-249-428-11	CARBON	8.2K	5%	1/4W	
R229	1-247-883-00	CARBON	150K	5%	1/4W	
R230	1-249-393-11	CARBON	10	5%	1/4W	
R231	1-247-432-11	CARBON	18K	5%	1/4W	
R232	1-249-439-11	CARBON	10K	5%	1/4W	
R301	1-249-409-11	CARBON	220	5%	1/4W	
R302	1-249-409-11	CARBON	220	5%	1/4W	
R303	1-249-433-11	CARBON	22K	5%	1/4W	
R304	1-249-435-11	CARBON	33K	5%	1/4W	
R305	1-249-436-11	CARBON	39K	5%	1/4W	
R306	1-247-880-11	CARBON	110K	5%	1/4W	
R307	1-247-885-00	CARBON	180K	5%	1/4W	
R308	1-249-436-11	CARBON	39K	5%	1/4W	
R309	1-247-881-00	CARBON	120K	5%	1/4W	
R310	1-247-874-11	CARBON	62K	5%	1/4W	
R311	1-247-872-11	CARBON	51K	5%	1/4W	
R312	1-247-889-00	CARBON	270K	5%	1/4W	
R313	1-247-883-00	CARBON	150K	5%	1/4W	
R314	1-247-870-11	CARBON	43K	5%	1/4W	
R315	1-247-893-11	CARBON	390K	5%	1/4W	
R316	1-249-438-11	CARBON	56K	5%	1/4W	
R317	1-247-872-11	CARBON	51K	5%	1/4W	
R318	1-247-876-11	CARBON	75K	5%	1/4W	
R319	1-249-441-11	CARBON	100K	5%	1/4W	
R320	1-249-438-11	CARBON	56K	5%	1/4W	
R321	1-247-881-00	CARBON	120K	5%	1/4W	
R322	1-249-433-11	CARBON	22K	5%	1/4W	
R323	1-249-409-11	CARBON	220	5%	1/4W	
R324	1-249-433-11	CARBON	22K	5%	1/4W	
R325	1-249-433-11	CARBON	22K	5%	1/4W	
R326	1-249-425-11	CARBON	4.7K	5%	1/4W	
R327	1-247-887-00	CARBON	220K	5%	1/4W	
R328	1-249-429-11	CARBON	10K	5%	1/4W	
R329	1-249-441-11	CARBON	100K	5%	1/4W	
R330	1-249-428-11	CARBON	8.2K	5%	1/4W	
R331	1-249-423-11	CARBON	3.3K	5%	1/4W	
R332	1-249-417-11	CARBON	1K	5%	1/4W	
R333	1-249-441-11	CARBON	100K	5%	1/4W	
R334	1-249-441-11	CARBON	100K	5%	1/4W	
R335	1-249-419-11	CARBON	1.5K	5%	1/4W	
R336	1-247-850-11	CARBON	6.2K	5%	1/4W	
R337	1-249-421-11	CARBON	2.2K	5%	1/4W	
R338	1-249-429-11	CARBON	10K	5%	1/4W	
R339	1-249-429-11	CARBON	10K	5%	1/4W	
R340	1-249-437-11	CARBON	47K	5%	1/4W	
R341	1-249-437-11	CARBON	47K	5%	1/4W	
R342	⚠1-212-851-00	FUSIBLE	5.6	5%	1/4W	F
R343	1-215-455-00	METAL	27K	1%	1/6W	
R344	1-247-864-11	CARBON	24K	5%	1/4W	
R345	1-249-437-11	CARBON	47K	5%	1/4W	
R601	1-249-410-11	CARBON	270	5%	1/4W	
R602	1-249-415-11	CARBON	680	5%	1/4W	
R701	1-249-429-11	CARBON	10K	5%	1/4W	

Note: The components identified by mark ⚠ or dotted line with mark ⚠ are critical for safety. Replace only with part number specified.

MAIN MD

Ref. No.	Part No.	Description				Remarks
R702	1-249-429-11	CARBON	10K	5%	1/4W	
R703	1-249-425-11	CARBON	4.7K	5%	1/4W	
R704	1-249-425-11	CARBON	4.7K	5%	1/4W	
R705	1-249-425-11	CARBON	4.7K	5%	1/4W	
R706	1-247-903-00	CARBON	1M	5%	1/4W	
R707	1-249-433-11	CARBON	22K	5%	1/4W	
R708	1-249-411-11	CARBON	330	5%	1/4W	
R709	1-247-830-11	CARBON	910	5%	1/4W	
R710	1-249-418-11	CARBON	1.2K	5%	1/4W	
R711	1-249-417-11	CARBON	1K	5%	1/4W	
R712	⚠1-212-950-00	FUSIBLE	4.7	5%	1/2W	F
R713	1-249-421-11	CARBON	2.2K	5%	1/4W	
R714	1-249-419-11	CARBON	1.5K	5%	1/4W	
R715	1-249-417-11	CARBON	1K	5%	1/4W	
R716	⚠1-212-950-00	FUSIBLE	4.7	5%	1/2W	F
R717	1-249-436-11	CARBON	39K	5%	1/4W	
R718	1-249-436-11	CARBON	39K	5%	1/4W	
R719	1-247-887-00	CARBON	220K	5%	1/4W	
R720	1-247-887-00	CARBON	220K	5%	1/4W	
R721	1-249-425-11	CARBON	4.7K	5%	1/4W	
R722	1-249-425-11	CARBON	4.7K	5%	1/4W	
R724	1-249-433-11	CARBON	22K	5%	1/4W	
R725	1-247-903-00	CARBON	1M	5%	1/4W	
R726	1-249-429-11	CARBON	10K	5%	1/4W	
R727	1-249-425-11	CARBON	4.7K	5%	1/4W	
R728	1-249-425-11	CARBON	4.7K	5%	1/4W	
R729	1-249-425-11	CARBON	4.7K	5%	1/4W	
R730	1-249-433-11	CARBON	22K	5%	1/4W	
R731	1-249-433-11	CARBON	22K	5%	1/4W	
R732	1-249-424-11	CARBON	3.9K	5%	1/4W	
R733	1-249-429-11	CARBON	10K	5%	1/4W	
R734	1-249-441-11	CARBON	100K	5%	1/4W	
R735	1-249-439-11	CARBON	68K	5%	1/4W	
R736	1-249-417-11	CARBON	1K	5%	1/4W	
R737	1-249-417-11	CARBON	1K	5%	1/4W	
R738	⚠1-212-950-00	FUSIBLE	4.7	5%	1/2W	F
R739	1-249-429-11	CARBON	10K	5%	1/4W	
R740	1-249-429-11	CARBON	10K	5%	1/4W	
R741	1-249-415-11	CARBON	680	5%	1/4W	
R742	1-249-420-11	CARBON	1.8K	5%	1/4W	
R743	1-249-410-11	CARBON	270	5%	1/4W	
R744	1-249-421-11	CARBON	2.2K	5%	1/4W	
R745	1-249-421-11	CARBON	2.2K	5%	1/4W	
R746	1-249-421-11	CARBON	2.2K	5%	1/4W	
R747	1-249-421-11	CARBON	2.2K	5%	1/4W	
R748	1-249-429-11	CARBON	10K	5%	1/4W	
R749	1-249-429-11	CARBON	10K	5%	1/4W	
R771	1-249-405-11	CARBON	100	5%	1/4W	
R772	1-249-405-11	CARBON	100	5%	1/4W	
R773	1-249-405-11	CARBON	100	5%	1/4W	
R780	1-249-433-11	CARBON	22K	5%	1/4W	
R801	1-249-431-11	CARBON	15K	5%	1/4W	
R802	1-249-431-11	CARBON	15K	5%	1/4W	
		< VARIABLE RESISTOR >				
RV101	1-238-597-11	RES, ADJ, CARBON 1K				
RV102	1-238-600-11	RES, ADJ, CARBON 10K				
RV103	1-238-601-11	RES, ADJ, CARBON 22K				
RV201	1-238-597-11	RES, ADJ, CARBON 1K				
RV202	1-238-600-11	RES, ADJ, CARBON 10K				
RV203	1-238-601-11	RES, ADJ, CARBON 22K				
RV301	1-241-232-11	RES, VAR, CARBON 20K/20K/20K(REC LEVEL)				
		< RELAY >				
RY301	1-515-726-11	RELAY				
		< SWITCH >				
S601	1-554-303-21	SWITCH, TACTILE (AUTO REC LEVEL)				
S605	1-554-303-21	SWITCH, TACTILE (⏏ OPEN/CLOSE)				
		< TRANSFORMER >				
T101	1-433-335-11	TRANSFORMER, BIAS OSCILLATION				
T201	1-433-335-11	TRANSFORMER, BIAS OSCILLATION				
T301	1-433-336-11	TRANSFORMER, BIAS OSCILLATION				
T801	1-450-673-11	TRANSFORMER, DC-DC CONVERTER				
		< CRYSTAL >				
X701	1-577-358-21	VIBRATOR, CERAMIC 4MHz				
X702	1-577-358-21	VIBRATOR, CERAMIC 4MHz				

****

*	1-632-740-11	MD BOARD
		********
	3-356-631-01	HOLDER (SENSOR)
		< CONNECTOR >
CN1001	1-506-615-11	PIN, CONNECTOR 9P
CN1002 *	1-564-502-11	PIN, CONNECTOR 10P

Note: The components identified by mark ⚠ or dotted line with mark ⚠ are critical for safety. Replace only with part number specified.

Ref. No.	Part No.	Description	Remarks
TB1001	* 1-569-066-11	PIN, CONNECTOR 5P	
		< IC >	
IC1001	8-749-920-97	IC PHOTO REFLECTOR GP2S22B(SUPPLY REEL)	
IC1002	8-749-920-97	IC PHOTO REFLECTOR GP2S22B (TAKE UP REEL)	
		< RESISTOR >	
R1001	1-249-408-11	CARBON 180 5% 1/4W	
R1002	1-249-408-11	CARBON 180 5% 1/4W	
		< SWITCH >	
S1001	1-466-526-11	ENCODER, ROTARY	
S1002	1-570-953-11	SWITCH, PUSH (1 KEY) (DOOR)	
S1003	1-571-958-11	SWITCH, PUSH (1 KEY) (CLOSE)	
S1004	1-572-126-11	SWITCH, PUSH (1 KEY) (OPEN)	
S1005	1-572-125-11	SWITCH, LEAF (FWD TAB)	
S1006	1-572-202-11	SWITCH, LEAF (HALF)	
S1007	1-572-125-11	SWITCH, LEAF (METAL)	
S1008	1-572-125-11	SWITCH, LEAF (70uS)	
S1009	1-572-125-11	SWITCH, LEAF (REV TAB)	

****

	* A-2006-453-A	PANEL BOARD, COMPLETE **********	
	* 3-368-109-01	HOLDER, FL TUBE	
	* 4-921-941-01	CUSHION (FL)	
		< CAPACITOR >	
C601	1-164-232-11	CERAMIC CHIP 0.01uF 50V	
C602	1-163-037-11	CERAMIC CHIP 0.022uF 10% 25V	
C603	1-163-137-00	CERAMIC CHIP 680P 10% 50V	
C604	1-163-137-00	CERAMIC CHIP 680P 10% 50V	
C605	1-163-137-00	CERAMIC CHIP 680P 10% 50V	
C606	1-163-037-11	CERAMIC CHIP 0.022uF 10% 25V	
		< CONNECTOR >	
CN601	* 1-568-858-11	SOCKET, CONNECTOR 15P	
CNP601	* 1-564-495-11	PIN, CONNECTOR 2P	
		< DIODE >	
D601	8-719-301-38	DIODE SEL2210-C	
D602	8-719-988-62	DIODE 1SS355	
D603	8-719-988-62	DIODE 1SS355	
		< INDICATOR >	
FL601	1-519-656-11	INDICATOR TUBE, FLUORESCENT	
		< IC >	
IC601	8-759-323-62	IC HD614023FA89	
		< RESISTOR >	
R603	1-216-059-00	METAL CHIP 2.7K 5% 1/10W	
R604	1-216-055-00	METAL CHIP 1.8K 5% 1/10W	
R605	1-216-063-00	METAL CHIP 3.9K 5% 1/10W	
R606	1-216-029-00	METAL CHIP 150 5% 1/10W	
R607	1-216-033-00	METAL CHIP 220 5% 1/10W	
R608	1-216-037-00	METAL CHIP 330 5% 1/10W	
R609	1-216-041-00	METAL CHIP 470 5% 1/10W	
R610	1-216-045-00	METAL CHIP 680 5% 1/10W	
R611	1-216-065-00	METAL CHIP 4.7K 5% 1/10W	
R612	1-216-051-00	METAL CHIP 1.2K 5% 1/10W	
R613	1-216-059-00	METAL CHIP 2.7K 5% 1/10W	
R614	1-216-063-00	METAL CHIP 3.9K 5% 1/10W	
R615	1-216-081-00	METAL CHIP 22K 5% 1/10W	
R616	1-216-121-00	METAL CHIP 1M 5% 1/10W	
R617	1-216-049-00	METAL CHIP 1K 5% 1/10W	
R618	1-216-081-00	METAL CHIP 22K 5% 1/10W	
R620	1-216-025-00	METAL CHIP 100 5% 1/10W	
R621	1-216-025-00	METAL CHIP 100 5% 1/10W	
R622	1-216-025-00	METAL CHIP 100 5% 1/10W	
		< SWITCH >	
S602	1-554-303-21	SWITCH, TACTILE (◁◁)	
S603	1-554-303-21	SWITCH, TACTILE (▷▷)	
S604	1-554-303-21	SWITCH, TACTILE (● REC)	
S606	1-554-303-21	SWITCH, TACTILE (□)	
S607	1-554-303-21	SWITCH, TACTILE (▷)	
S608	1-554-303-21	SWITCH, TACTILE (◁)	
S609	1-554-303-21	SWITCH, TACTILE (❚❚ PAUSE)	
S610	1-554-303-21	SWITCH, TACTILE (● MUTE)	
S611	1-554-303-21	SWITCH, TACTILE (COUNTER RESET)	
S612	1-570-834-11	SWITCH, SLIDE (DOLBY NR)	
S613	1-570-842-11	SWITCH, SLIDE (DIRECTION MODE)	
		< CRYSTAL >	
X601	1-577-359-21	VIBRATOR, CERAMIC 4.19MHz	

PIN JACK

Ref. No.	Part No.	Description				Remarks
**********						
*	A-2006-548-A	PIN JACK BOARD, COMPLETE				
		**********				
		< CAPACITOR >				
C401	1-163-003-11	CERAMIC CHIP	330PF	10%	50V	
C402	1-163-003-11	CERAMIC CHIP	330PF	10%	50V	
C403	1-163-003-11	CERAMIC CHIP	330PF	10%	50V	
C404	1-163-003-11	CERAMIC CHIP	330PF	10%	50V	
C405	1-163-003-11	CERAMIC CHIP	330PF	10%	50V	
C407	1-163-117-00	CERAMIC CHIP	100PF	5%	50V	
C409	1-124-465-00	ELECT	0.47uF	20%	50V	
C410	1-163-125-00	CERAMIC CHIP	220PF	5%	50V	
C411	1-126-163-11	ELECT	4.7uF	20%	50V	
C412	1-163-018-00	CERAMIC CHIP	0.0056uF	5%	50V	
C413	1-163-011-11	CERAMIC CHIP	0.0015uF	10%	50V	
C414	1-124-257-00	ELECT	2.2uF	20%	50V	
C416	1-163-117-00	CERAMIC CHIP	100PF	5%	50V	
C417	1-163-117-00	CERAMIC CHIP	100PF	5%	50V	
C418	1-126-157-11	ELECT	10uF	20%	16V	
C419	1-126-157-11	ELECT	10uF	20%	16V	
C451	1-163-003-11	CERAMIC CHIP	330PF	10%	50V	
C452	1-163-003-11	CERAMIC CHIP	330PF	10%	50V	
C453	1-163-003-11	CERAMIC CHIP	330PF	10%	50V	
C454	1-163-003-11	CERAMIC CHIP	330PF	10%	50V	
C455	1-163-003-11	CERAMIC CHIP	330PF	10%	50V	
C457	1-163-117-00	CERAMIC CHIP	100PF	5%	50V	
C459	1-124-465-00	ELECT	0.47uF	20%	50V	
C460	1-163-125-00	CERAMIC CHIP	220PF	5%	50V	
C461	1-126-163-11	ELECT	4.7uF	20%	50V	
C462	1-163-018-00	CERAMIC CHIP	0.0056uF	5%	50V	
C463	1-163-011-11	CERAMIC CHIP	0.0015uF	10%	50V	
C464	1-124-257-00	ELECT	2.2uF	20%	50V	
C466	1-163-117-00	CERAMIC CHIP	100PF	5%	50V	
C467	1-163-117-00	CERAMIC CHIP	100PF	5%	50V	
C468	1-126-012-11	ELECT	470uF	20%	16V	
C469	1-126-012-11	ELECT	470uF	20%	16V	
C470	1-126-012-11	ELECT	470uF	20%	16V	
C481	1-164-232-11	CERAMIC CHIP	0.01uF		50V	
C482	1-164-232-11	CERAMIC CHIP	0.01uF		50V	
C483	1-126-177-11	ELECT	100uF	20%	10V	
C484	1-164-232-11	CERAMIC CHIP	0.01uF		50V	
C485	1-164-232-11	CERAMIC CHIP	0.01uF		50V	
C486	1-126-157-11	ELECT	10uF	20%	16V	
C487	1-164-232-11	CERAMIC CHIP	0.01uF		50V	
C488	1-164-232-11	CERAMIC CHIP	0.01uF		50V	
C489	1-164-232-11	CERAMIC CHIP	0.01uF		50V	
C490	1-164-232-11	CERAMIC CHIP	0.01uF		50V	
C491	1-164-232-11	CERAMIC CHIP	0.01uF		50V	
C492	1-164-232-11	CERAMIC CHIP	0.01uF		50V	
C493	1-164-232-11	CERAMIC CHIP	0.01uF		50V	
C494	1-164-232-11	CERAMIC CHIP	0.01uF		50V	
C495	1-164-232-11	CERAMIC CHIP	0.01uF		50V	
C496	1-164-232-11	CERAMIC CHIP	0.01uF		50V	
C497	1-126-301-11	ELECT	1uF	20%	50V	
C4001	1-163-119-00	CERAMIC CHIP	120PF	5%	50V	
C4002	1-163-119-00	CERAMIC CHIP	120PF	5%	50V	
C4003	1-124-589-11	ELECT	47uF	20%	16V	
C4010	1-163-037-11	CERAMIC CHIP	0.022uF	10%	25V	
C4013	1-163-037-11	CERAMIC CHIP	0.022uF	10%	25V	
C4020	1-163-037-11	CERAMIC CHIP	0.022uF	10%	25V	
C4021	1-163-037-11	CERAMIC CHIP	0.022uF	10%	25V	
C4022	1-124-589-11	ELECT	47uF	20%	16V	
		< CONNECTOR >				
CN401	* 1-568-834-11	SOCKET, CONNECTOR 15P				
CNJ401	* 1-580-740-11	SOCKET, CONNECTOR 17P				
CNJ402	* 1-573-187-11	PIN, CONNECTOR (PC BOARD) 7P				
CNJ403	* 1-573-388-11	PIN, CONNECTOR (PC BOARD) 8P				
		< DIODE >				
D401	8-719-990-36	DIODE	DCA010			
D403	8-719-210-33	DIODE	EC10DS2			
D404	8-719-210-33	DIODE	EC10DS2			
D405	8-719-990-36	DIODE	DCA010			
D4001	8-719-988-62	DIODE	1SS355			
D4002	8-719-988-62	DIODE	1SS355			
		< IC >				
IC401	8-759-636-55	IC	M5218AFP			
IC402	8-759-636-55	IC	M5218AFP			
IC403	8-759-009-05	IC	MC14051BF			
IC404	8-759-009-05	IC	MC14051BF			
IC405	8-759-516-47	IC	CD4066BCM			
IC406	8-759-636-35	IC	M50760-315FP			
IC407	8-759-991-77	IC	BA7625			

PIN JACK

Ref. No.	Part No.	Description				Remarks
		(JACK)				
J401	1-565-304-11	JACK, PIN 4P (AUDIO)				
J402	* 1-569-812-11	JACK, PIN 6P (AUDIO)				
J403	1-565-933-11	JACK, PIN 3P (VIDEO)				
J404	1-573-144-11	JACK, PIN 2P (VIDEO)				
		(JUMPER)				
JW2	1-216-295-00	METAL CHIP	0	5%	1/10W	
JW3	1-216-295-00	METAL CHIP	0	5%	1/10W	
JW8	1-216-295-00	METAL CHIP	0	5%	1/10W	
JW10	1-216-295-00	METAL CHIP	0	5%	1/10W	
JW12	1-216-295-00	METAL CHIP	0	5%	1/10W	
JW413	1-216-295-00	METAL CHIP	0	5%	1/10W	
JW414	1-216-295-00	METAL CHIP	0	5%	1/10W	
JW439	1-216-295-00	METAL CHIP	0	5%	1/10W	
JW441	1-216-295-00	METAL CHIP	0	5%	1/10W	
JW463	1-216-295-00	METAL CHIP	0	5%	1/10W	
JW464	1-216-295-00	METAL CHIP	0	5%	1/10W	
		(COIL)				
L401	1-408-789-21	INDUCTOR, CHIP 100uH				
L4001	1-408-777-00	INDUCTOR, CHIP 10uF				
		(TRANSISTOR)				
Q401	8-729-805-65	TRANSISTOR	2SA1344			
Q402	8-729-805-65	TRANSISTOR	2SA1344			
Q403	8-729-602-36	TRANSISTOR	2SA1602-F			
Q404	8-729-602-36	TRANSISTOR	2SA1602-F			
Q405	8-729-602-36	TRANSISTOR	2SA1602-F			
Q406	8-729-602-36	TRANSISTOR	2SA1602-F			
Q407	8-729-602-21	TRANSISTOR	2SC4154-F			
		(RESISTOR)				
R401	1-216-049-00	METAL CHIP	1K	5%	1/10W	
R402	1-216-049-00	METAL CHIP	1K	5%	1/10W	
R403	1-216-049-00	METAL CHIP	1K	5%	1/10W	
R404	1-216-041-00	METAL CHIP	470	5%	1/10W	
R405	1-216-041-00	METAL CHIP	470	5%	1/10W	
R407	1-216-115-00	METAL CHIP	560K	5%	1/10W	
R408	1-216-115-00	METAL CHIP	560K	5%	1/10W	
R409	1-216-115-00	METAL CHIP	560K	5%	1/10W	
R410	1-216-115-00	METAL CHIP	560K	5%	1/10W	
R411	1-216-115-00	METAL CHIP	560K	5%	1/10W	

Ref. No.	Part No.	Description				Remarks
R415	1-216-049-00	METAL CHIP	1K	5%	1/10W	
R417	1-216-089-00	METAL CHIP	47K	5%	1/10W	
R418	1-216-049-00	METAL CHIP	1K	5%	1/10W	
R419	1-216-115-00	METAL CHIP	560K	5%	1/10W	
R420	1-216-089-00	METAL CHIP	47K	5%	1/10W	
R421	1-216-001-00	METAL CHIP	10	5%	1/10W	
R422	1-216-075-00	METAL CHIP	12K	5%	1/10W	
R423	1-216-041-00	METAL CHIP	470	5%	1/10W	
R425	1-216-025-00	METAL CHIP	100	5%	1/10W	
R426	1-216-089-00	METAL CHIP	47K	5%	1/10W	
R427	1-216-089-00	METAL CHIP	47K	5%	1/10W	
R428	1-216-089-00	METAL CHIP	47K	5%	1/10W	
R429	1-216-089-00	METAL CHIP	47K	5%	1/10W	
R430	1-216-089-00	METAL CHIP	47K	5%	1/10W	
R431	1-216-022-00	METAL CHIP	75	5%	1/10W	
R432	1-216-022-00	METAL CHIP	75	5%	1/10W	
R434	1-216-073-00	METAL CHIP	10K	5%	1/10W	
R435	1-216-073-00	METAL CHIP	10K	5%	1/10W	
R436	1-216-089-00	METAL CHIP	47K	5%	1/10W	
R437	1-216-121-00	METAL CHIP	1M	5%	1/10W	
R440	1-216-089-00	METAL CHIP	47K	5%	1/10W	
R442	1-216-089-00	METAL CHIP	47K	5%	1/10W	
R450	1-216-065-00	METAL CHIP	4.7K	5%	1/10W	
R451	1-216-049-00	METAL CHIP	1K	5%	1/10W	
R452	1-216-049-00	METAL CHIP	1K	5%	1/10W	
R453	1-216-049-00	METAL CHIP	1K	5%	1/10W	
R454	1-216-041-00	METAL CHIP	470	5%	1/10W	
R455	1-216-041-00	METAL CHIP	470	5%	1/10W	
R457	1-216-115-00	METAL CHIP	560K	5%	1/10W	
R458	1-216-115-00	METAL CHIP	560K	5%	1/10W	
R459	1-216-115-00	METAL CHIP	560K	5%	1/10W	
R460	1-216-115-00	METAL CHIP	560K	5%	1/10W	
R461	1-216-115-00	METAL CHIP	560K	5%	1/10W	
R465	1-216-049-00	METAL CHIP	1K	5%	1/10W	
R467	1-216-089-00	METAL CHIP	47K	5%	1/10W	
R468	1-216-049-00	METAL CHIP	1K	5%	1/10W	
R469	1-216-115-00	METAL CHIP	560K	5%	1/10W	
R470	1-216-089-00	METAL CHIP	47K	5%	1/10W	
R471	1-216-001-00	METAL CHIP	10	5%	1/10W	
R472	1-216-075-00	METAL CHIP	12K	5%	1/10W	
R473	1-216-041-00	METAL CHIP	470	5%	1/10W	
R475	1-216-025-00	METAL CHIP	100	5%	1/10W	
R476	1-216-089-00	METAL CHIP	47K	5%	1/10W	
R477	1-216-089-00	METAL CHIP	47K	5%	1/10W	
R478	1-216-089-00	METAL CHIP	47K	5%	1/10W	

PIN JACK POWER

Ref. No.	Part No.	Description				Remarks
R481	1-216-022-00	METAL CHIP	75	5%	1/10W	
R482	1-216-022-00	METAL CHIP	75	5%	1/10W	
R483	1-216-022-00	METAL CHIP	75	5%	1/10W	
R484	1-216-049-00	METAL CHIP	1K	5%	1/10W	
R485	1-216-049-00	METAL CHIP	1K	5%	1/10W	
R486	1-216-049-00	METAL CHIP	1K	5%	1/10W	
R487	1-216-029-00	METAL CHIP	150	5%	1/10W	
R488	1-216-029-00	METAL CHIP	150	5%	1/10W	
R489	1-216-031-00	METAL CHIP	180	5%	1/10W	
R490	1-216-031-00	METAL CHIP	180	5%	1/10W	
R491	1-216-031-00	METAL CHIP	180	5%	1/10W	
R492	1-216-029-00	METAL CHIP	150	5%	1/10W	
R493	1-216-073-00	METAL CHIP	10K	5%	1/10W	
R494	1-216-073-00	METAL CHIP	10K	5%	1/10W	
R495	1-216-081-00	METAL CHIP	22K	5%	1/10W	
R496	1-216-081-00	METAL CHIP	22K	5%	1/10W	
R497	1-216-073-00	METAL CHIP	10K	5%	1/10W	
R499	1-216-073-00	METAL CHIP	10K	5%	1/10W	
R500	1-216-065-00	METAL CHIP	4.7K	5%	1/10W	
		(CRYSTAL)				
X401	1-577-077-11	OSCILLATOR, CERAMIC 400KHz				

****

*	1-639-415-11	POWER BOARD				
		**********				
	7-685-646-79	SCREW +BVTP 3X8 TYPE N-S				
		(CAPACITOR)				
C501	1-124-556-11	ELECT	2200uF	20%	16V	
C502	1-124-556-11	ELECT	2200uF	20%	16V	
C503	1-124-360-00	ELECT	1000uF	20%	16V	
C504	1-124-556-11	ELECT	2200uF	20%	16V	
C505	1-126-059-11	ELECT	10uF	20%	50V	
C506	1-163-038-00	CERAMIC CHIP	0.1uF		25V	
C507	1-124-903-11	ELECT	1uF	20%	50V	
C508	1-124-472-11	ELECT	470uF	20%	10V	
C509	1-124-472-11	ELECT	470uF	20%	10V	
C510	1-124-477-11	ELECT	47uF	20%	25V	
C511	1-124-903-11	ELECT	1uF	20%	50V	
C512	1-124-477-11	ELECT	47uF	20%	25V	
C513	1-124-903-11	ELECT	1uF	20%	50V	
C514	1-124-472-11	ELECT	470uF	20%	10V	
C515	1-124-477-11	ELECT	47uF	20%	25V	
C516	1-124-903-11	ELECT	1uF	20%	50V	
C518	1-124-473-11	ELECT	1000uF	20%	10V	
C519	1-124-473-11	ELECT	1000uF	20%	10V	
C520	1-163-038-00	CERAMIC CHIP	0.1uF		25V	
C521	1-163-038-00	CERAMIC CHIP	0.1uF		25V	
C526	1-163-037-11	CERAMIC CHIP	0.022uF	10%	25V	
C527	1-163-037-11	CERAMIC CHIP	0.022uF	10%	25V	
C528	1-164-232-11	CERAMIC CHIP	0.01uF	10%	50V	
C5001	1-163-009-11	CERAMIC CHIP	1000P	10%	50V	
C5002	1-163-009-11	CERAMIC CHIP	1000P	10%	50V	
C5004	1-163-037-11	CERAMIC CHIP	0.022uF	10%	25V	
C5005	1-164-232-11	CERAMIC CHIP	0.01uF	10%	50V	
C5007	1-164-346-11	CERAMIC CHIP	1uF		16V	
		(CONNECTOR)				
CN402	* 1-573-187-11	PIN, CONNECTOR (PC BOARD) 7P				
CN403	* 1-573-388-11	PIN, CONNECTOR (PC BOARD) 8P				
		(DIODE)				
D501	8-719-210-33	DIODE	EC10DS2			
D502	8-719-210-33	DIODE	EC10DS2			
D503	8-719-210-33	DIODE	EC10DS2			
D504	8-719-210-33	DIODE	EC10DS2			
D505	8-719-988-62	DIODE	1SS355			
D506	8-719-106-36	DIODE	RD8.2M-B3			
D508	8-719-210-33	DIODE	EC10DS2			
D509	8-719-210-33	DIODE	EC10DS2			
D510	8-719-210-33	DIODE	EC10DS2			
D511	8-719-210-33	DIODE	EC10DS2			
		(FUSE)				
F501	⚠1-532-843-21	FUSE 2.5A				
F502	⚠1-532-843-21	FUSE 2.5A				
		(IC)				
IC501	8-759-823-46	IC	LA5603			
		(TRANSISTOR)				
Q501	8-729-209-15	TRANSISTOR	2SD2012			
Q502	8-729-111-67	TRANSISTOR	2SB1094-L			
Q503	8-729-805-65	TRANSISTOR	2SA1344			
Q504	8-729-602-21	TRANSISTOR	2SC4154-F			
Q505	8-729-602-21	TRANSISTOR	2SC4154-F			

Note: The components identified by mark ⚠ or dotted line with mark ⚠ are critical for safety. Replace only with part number specified.

POWER | REEL MOTOR | TRANSLATION

Ref. No.	Part No.	Description				Remarks
Q506	8-729-602-36	TRANSISTOR	2SA1602-EF			
Q510	8-729-805-49	TRANSISTOR	2SC3398			
Q511	8-729-602-36	TRANSISTOR	2SA1602-EF			
		< RESISTOR >				
R501	1-216-033-00	METAL CHIP	220	5%	1/10W	
R502	1-216-057-00	METAL CHIP	2.2K	5%	1/10W	
R503	1-216-057-00	METAL CHIP	2.2K	5%	1/10W	
R504	1-216-089-00	METAL CHIP	47K	5%	1/10W	
R505	1-216-089-00	METAL CHIP	47K	5%	1/10W	
R520	1-216-058-00	METAL CHIP	2.4K	5%	1/10W	
R521	1-216-056-00	METAL CHIP	2K	5%	1/10W	
R5001	1-216-025-00	METAL CHIP	100	5%	1/10W	
R5002	1-216-025-00	METAL CHIP	100	5%	1/10W	

****

*	1-632-741-11	REEL MOTOR BOARD				
		**********				
		< CAPACITOR >				
C1051	1-124-907-11	ELECT	10uF	20%	50V	
C1052	1-124-907-11	ELECT	10uF	20%	50V	
C1053	1-164-159-11	CERAMIC	0.1uF		50V	
		< CONNECTOR >				
CN1051 *	1-564-499-11	PIN, CONNECTOR 6P				
CN1052 *	1-564-718-11	PIN, CONNECTOR (SMALL TYPE) 2P				
CN1053 *	1-564-718-11	PIN, CONNECTOR (SMALL TYPE) 2P				
		< RESISTOR >				
R1051	1-249-414-11	CARBON	560	5%	1/4W	

****

*	1-634-323-11	TRANSLATION BOARD				
		**********				
		< CONNECTOR >				
CN1091 *	1-564-709-11	PIN, CONNECTOR (SMALL TYPE) 7P				
CN1092 *	1-564-509-11	PLUG, CONNECTOR 6P				

****

Ref. No.	Part No.	Description	Remarks
		MISCELLANEOUS	
		**********	
4	1-575-906-11	WIRE, FLAT TYPE (15 CORE)	
11 *	1-573-188-11	CONNECTOR, BRIDGE 7P	
12 *	1-573-389-11	COONECTOR, BRIDGE 8P	
13	1-575-664-11	WIRE, FLAT TYPE (15 CORE)	
D1051	8-719-980-85	DIODE SLF-325C	
HRPE1001	A-2003-772-A	BASE ASSY, HEAD	
IC1001	8-749-920-97	IC PHOTO REFLECTOR GP2S22B	
IC1002	8-749-920-97	IC PHOTO REFLECTOR GP2S22B	
M1051	X-3356-638-1	MOTOR (REEL R) ASSY	
M1052	X-3356-604-1	MOTOR (ASSIST) ASSY	
M1053	X-3356-635-1	MOTOR (CAPSTAN R2) ASSY	
S1001	1-466-525-11	ENCODER, ROTARY	

****

HARDWARE LIST

****

# 1	7-621-773-93	SCREW (PANEL 2.6 TP2)
# 2	7-685-646-79	SCREW +BVTP 3X8 TYPE2 N-S
# 3	7-682-547-04	SCREW +BVTT 3X6 (S)
# 4	7-621-283-00	SCREW +BVTT 2X5 (S)
# 5	7-685-133-19	SCREW +BTP 2.6X6 TYPE2 N-S
# 6	7-621-255-20	SCREW +BVTT 2X4 (S)
# 7	7-621-255-35	SCREW +BVTT 2X5 (S)
# 8	7-621-770-67	SCREW +BVTT 2.6X6 (S)
# 9	7-685-131-19	SCREW +BTP 2.6X4 TYPE2 N-S
#10	7-621-849-00	SCREW (BV/RING)
# 11	7-621-255-15	SCREW +PTT 2X3 (S)

English
91F1667-1

Sony Corporation
Audio Group

9-956-358-11

Printed by: Schaltungsdienst Lange, Berlin (Germany)

Published by Customer Relations and Service Group

TC-H5600

SONY
SERVICE MANUAL

AEP Model
UK Model
E Model

SUPPLEMENT-1

File this Supplement with the Service Manual.

Subject : Circuit change

English
9-410976-1

Sony Corporation
Consumer A&V Products Company
Home A&V Products Div.

9-956-358-81

©1994. 9
Published by Home A&V Products Div.
Quality Engineering Dept.

SECTION 6
ELECTRICAL PARTS LIST

MAIN

NOTE:

The components identified by mark ⚠ or dotted line with mark ⚠ are critical for safety.
Replace only with part number specified.

When indicating parts by reference number, please include the board name.

- Due to standardization, replacements in the parts list may be different from the parts specified in the diagrams or the components used on the set.
- Items marked "*" are not stocked since they are seldom required for routine service. Some delay should be anticipated when ordering these items.
- -XX, -X mean standardized parts, so they may have some difference from the original one.

- RESISTORS
  All resistors are in ohms
  METAL: Metal-film resistor
  METAL OXIDE: Metal Oxide-film resistor
  F : nonflammable
- SEMICONDUCTORS
  In each case, u: μ , for example:
  uA...: μA..., uPA...: μPA..., uPB...: μPB..., uPC...: μPC..., uPD...: μPD...
- CAPACITORS
  uF : μF
- COILS
  uH : μH

Ref. No.	Part No.	Description				Remark
*	A-2006-452-A	MAIN BOARD, COMPLETE				
		**********				
*	1-573-496-11	HOUSING, CONNECTOR 12P				
*	1-573-497-11	PIN, CONNECTOR (PC BOARD) 12P BOARD				
*	3-356-925-01	HEAT SINK				
	7-682-548-04	SCREW +BVTT 3X8 (S)				
		< CAPACITOR >				
C101	1-162-294-31	CERAMIC	0.001uF	10%	50V	
C102	1-136-157-00	FILM	0.022uF	5%	50V	
C103	1-124-282-00	ELECT	22uF	20%	25V	
C105	1-136-158-00	FILM	0.027uF	5%	50V	
C106	1-162-294-31	CERAMIC	0.001uF	10%	50V	
C107	1-124-907-11	ELECT	10uF	20%	50V	
C108	1-124-916-11	ELECT	22uF	20%	63V	
C109	1-130-475-00	MYLAR	0.0022uF	5%	50V	
C110	1-130-475-00	MYLAR	0.0022uF	5%	50V	
C111	1-136-174-00	FILM	0.56uF	5%	50V	
C112	1-136-171-00	FILM	0.33uF	5%	50V	
C113	1-124-907-11	ELECT	10uF	20%	50V	
C114	1-124-902-00	ELECT	0.47uF	20%	50V	
C115	1-124-927-11	ELECT	4.7uF	20%	100V	
C116	1-124-927-11	ELECT	4.7uF	20%	100V	
C117	1-124-925-11	ELECT	2.2uF	20%	100V	
C118	1-162-285-31	CERAMIC	180PF	10%	50V	
C119	1-136-935-11	FILM	22PF	5%	630V	
C120	1-130-468-00	MYLAR	560PF	5%	50V	
C121	1-136-433-11	FILM	100PF	5%	630V	
C122	1-136-272-00	FILM	68PF	5%	630V	
C123	1-136-153-00	FILM	0.01uF	5%	50V	
C124	1-136-165-00	FILM	0.1uF	5%	50V	
C125	1-136-157-00	FILM	0.022uF	5%	50V	
C201	1-162-294-31	CERAMIC	0.001uF	10%	50V	
C202	1-136-157-00	FILM	0.022uF	5%	50V	
C203	1-124-282-00	ELECT	22uF	20%	25V	
C205	1-136-158-00	FILM	0.027uF	5%	50V	
C206	1-162-294-31	CERAMIC	0.001uF	10%	50V	
C207	1-124-907-11	ELECT	10uF	20%	50V	
C208	1-124-916-11	ELECT	22uF	20%	63V	
C209	1-130-475-00	MYLAR	0.0022uF	5%	50V	
C210	1-130-475-00	MYLAR	0.0022uF	5%	50V	
C211	1-136-174-00	FILM	0.56uF	5%	50V	
C212	1-136-171-00	FILM	0.33uF	5%	50V	

Ref. No.	Part No.	Description				Remark
C213	1-124-907-11	ELECT	10uF	20%	50V	
C214	1-124-902-00	ELECT	0.47uF	20%	50V	
C215	1-124-927-11	ELECT	4.7uF	20%	100V	
C216	1-124-927-11	ELECT	4.7uF	20%	100V	
C217	1-124-925-11	ELECT	2.2uF	20%	100V	
C218	1-162-285-31	CERAMIC	180PF	10%	50V	
C219	1-136-935-11	FILM	22PF	5%	630V	
C220	1-130-468-00	MYLAR	560PF	5%	50V	
C221	1-136-433-11	FILM	100PF	5%	630V	
C222	1-136-272-00	FILM	68PF	5%	630V	
C223	1-136-153-00	FILM	0.01uF	5%	50V	
C224	1-136-165-00	FILM	0.1uF	5%	50V	
C225	1-136-157-00	FILM	0.022uF	5%	50V	
C301	1-124-443-00	ELECT	100uF	20%	10V	
C302	1-124-443-00	ELECT	100uF	20%	10V	
C303	1-124-907-11	ELECT	10uF	20%	50V	
C304	1-124-907-11	ELECT	10uF	20%	50V	
C305	1-124-478-11	ELECT	100uF	20%	25V	
C306	1-124-925-11	ELECT	2.2uF	20%	100V	
C307	1-124-902-00	ELECT	0.47uF	20%	50V	
C308	1-162-215-31	CERAMIC	47PF	5%	50V	
C309	1-161-494-00	CERAMIC	0.022uF		25V	
C310	1-162-286-31	CERAMIC	220PF	10%	50V	
C311	1-124-925-11	ELECT	2.2uF	20%	100V	
C312	1-124-477-11	ELECT	47uF	20%	25V	
C313	1-124-902-00	ELECT	0.47uF	20%	50V	
C314	1-124-478-11	ELECT	100uF	20%	25V	
C315	1-124-478-11	ELECT	100uF	20%	25V	
C316	1-130-856-00	FILM	0.0068uF	5%	100V	
C317	1-136-230-00	FILM	0.0022uF	5%	100V	
C318	1-136-230-00	FILM	0.0022uF	5%	100V	
C319	1-124-907-11	ELECT	10uF	20%	50V	
C320	1-161-494-00	CERAMIC	0.022uF		25V	
C321	1-136-558-11	FILM	0.0039uF	5%	630V	
C322	1-107-585-11	CERAMIC	5PF	0.25PF	500V	
C701	1-124-443-00	ELECT	100uF	20%	10V	
C702	1-164-159-11	CERAMIC	0.1uF		50V	
C703	1-164-159-11	CERAMIC	0.1uF		50V	
C704	1-164-159-11	CERAMIC	0.1uF		50V	
C705	1-124-443-00	ELECT	100uF	20%	10V	
C706	1-124-925-11	ELECT	2.2uF	20%	100V	
C707	1-164-159-11	CERAMIC	0.1uF		50V	
C708	1-136-165-00	FILM	0.1uF	5%	50V	

Ref. No.	Part No.	Description			Remark
C709	1-136-165-00	FILM	0.1uF	5%	50V
C720	1-164-159-11	CERAMIC	0.1uF		50V
C750	1-161-494-00	CERAMIC	0.022uF		25V
C751	1-161-494-00	CERAMIC	0.022uF		25V
C752	1-161-494-00	CERAMIC	0.022uF		25V
C753	1-161-494-00	CERAMIC	0.022uF		25V
C754	1-161-494-00	CERAMIC	0.022uF		25V
C801	1-124-907-11	ELECT	10uF	20%	50V
C802	1-136-594-11	FILM	0.018uF	5%	100V
C803	1-124-907-11	ELECT	10uF	20%	50V
		< CONNECTOR >			
* CN701	1-568-834-11	SOCKET, CONNECTOR 15P			
* CN702	1-568-834-11	SOCKET, CONNECTOR 15P			
* CNP301	1-564-705-11	PIN, CONNECTOR (SMALL TYPE) 3P			
* CNP302	1-564-705-11	PIN, CONNECTOR (SMALL TYPE) 3P			
* CNP303	1-564-708-11	PIN, CONNECTOR (SMALL TYPE) 6P			
CNP304	1-564-511-11	PLUG, CONNECTOR 8P			
* CNP305	1-564-518-11	PLUG, CONNECTOR 3P			
* CNP702	1-564-339-00	PIN, CONNECTOR 5P			
* CNP703	1-564-505-11	PLUG, CONNECTOR 2P			
* CNP707	1-564-342-11	PIN, CONNECTOR 8P			
* CNP708	1-564-336-61	PIN, CONNECTOR 2P			
		< COMPOSITION CIRCUIT BLOCK >			
CP701	1-233-199-11	COMPOSITION CIRCUIT BLOCK			
CP702	1-233-199-11	COMPOSITION CIRCUIT BLOCK			
CP703	1-232-944-11	COMPOSITION CIRCUIT BLOCK			
		< DIODE >			
D101	8-719-987-63	DIODE	1N4148M		
D201	8-719-987-63	DIODE	1N4148M		
D301	8-719-987-63	DIODE	1N4148M		
D302	8-719-987-63	DIODE	1N4148M		
D303	8-719-987-63	DIODE	1N4148M		
D304	8-719-933-50	DIODE	HZS7C2L		
D305	8-719-987-63	DIODE	1N4148M		
D306	8-719-987-63	DIODE	1N4148M		
D307	8-719-987-63	DIODE	1N4148M		
D308	8-719-987-63	DIODE	1N4148M		
D309	8-719-987-63	DIODE	1N4148M		
D601	8-719-301-38	DIODE	SEL2210S-C (AUTO REC LEVEL)		
D701	8-719-987-63	DIODE	1N4148M		
D702	8-719-987-63	DIODE	1N4148M		
D703	8-719-933-50	DIODE	HZS7C2L		
D704	8-719-933-50	DIODE	HZS7C2L		
D705	8-719-933-50	DIODE	HZS7C2L		
D706	8-719-933-50	DIODE	HZS7C2L		
D707	8-719-933-50	DIODE	HZS7C2L		
D708	8-719-933-50	DIODE	HZS7C2L		

Ref. No.	Part No.	Description		Remark
D709	8-719-933-50	DIODE	HZS7C2L	
D710	8-719-933-50	DIODE	HZS7C2L	
D711	8-719-933-50	DIODE	HZS7C2L	
D712	8-719-933-50	DIODE	HZS7C2L	
D713	8-719-987-63	DIODE	1N4148M	
D714	8-719-987-63	DIODE	1N4148M	
D720	8-719-200-77	DIODE	10E2N	
D721	8-719-200-77	DIODE	10E2N	
D722	8-719-200-77	DIODE	10E2N	
D750	8-719-933-47	DIODE	HZS7B2L	
D751	8-719-933-47	DIODE	HZS7B2L	
D752	8-719-987-63	DIODE	1N4148M	
D753	8-719-987-63	DIODE	1N4148M	
D754	8-719-987-63	DIODE	1N4148M	
D801	8-719-109-89	DIODE	RD5.6ESB2	
D802	8-719-200-77	DIODE	10E2N	
D803	8-719-200-77	DIODE	10E2N	
D804	8-719-200-77	DIODE	10E2N	
D805	8-719-200-77	DIODE	10E2N	
		< IC >		
IC301	8-759-111-44	IC	uPC4570C-1	
IC302	8-752-059-56	IC	CXA1330S	
IC303	8-752-060-64	IC	CXA1198AP	
IC304	8-759-145-58	IC	uPC4558C	
IC305	8-759-145-58	IC	uPC4558C	
IC306	8-759-106-56	IC	uPC1297CA	
IC701	8-759-633-86	IC	M50747-B83SP	
IC702	8-759-634-79	IC	M50944-155SP	
IC703	8-759-973-95	IC	BA6219B	
IC704	8-759-822-09	IC	LB1641	
IC705	8-759-240-69	IC	TC4069UBP	
IC706	8-759-822-09	IC	LB1641	
		< COIL >		
L101	1-410-780-11	INDUCTOR	27mH	
L201	1-410-780-11	INDUCTOR	27mH	
L301	1-408-080-00	INDUCTOR	100uH	
L801	1-410-761-11	INDUCTOR	0.68mH	
L802	1-410-521-11	INDUCTOR	100uH	
L803	1-410-521-11	INDUCTOR	100uH	
		< FILTER >		
LPF101	1-236-087-11	FILTER, LOW PASS		
LPF201	1-236-087-11	FILTER, LOW PASS		
		< TRANSISTOR >		
Q101	8-729-900-89	TRANSISTOR	DTC144ES	
Q102	8-729-900-74	TRANSISTOR	DTC143TS	
Q103	8-729-821-31	TRANSISTOR	2SD1012-FG	

MAIN

Ref. No.	Part No.	Description		Remark
Q201	8-729-900-89	TRANSISTOR	DTC144ES	
Q202	8-729-900-74	TRANSISTOR	DTC143TS	
Q203	8-729-821-31	TRANSISTOR	2SD1012-FG	
Q301	8-729-900-65	TRANSISTOR	DTA144ES	
Q302	8-729-900-89	TRANSISTOR	DTC144ES	
Q303	8-729-900-89	TRANSISTOR	DTC144ES	
Q304	8-729-820-24	TRANSISTOR	2SC3330-T	
Q305	8-729-900-89	TRANSISTOR	DTC144ES	
Q306	8-729-821-04	TRANSISTOR	2SA1317-STU	
Q307	8-729-900-65	TRANSISTOR	DTA144ES	
Q308	8-729-900-65	TRANSISTOR	DTA144ES	
Q309	8-729-900-89	TRANSISTOR	DTC144ES	
Q310	8-729-900-65	TRANSISTOR	DTA144ES	
Q311	8-729-900-61	TRANSISTOR	DTA114ES	
Q312	8-729-900-80	TRANSISTOR	DTC114ES	
Q313	8-729-900-80	TRANSISTOR	DTC114ES	
Q314	8-729-900-80	TRANSISTOR	DTC114ES	
Q315	8-729-821-04	TRANSISTOR	2SA1317-STU	
Q316	8-729-194-57	TRANSISTOR	2SC945-P	
Q317	8-729-194-57	TRANSISTOR	2SC945-P	
Q318	8-729-900-65	TRANSISTOR	DTA144ES	
Q701	8-729-900-80	TRANSISTOR	DTC114ES	
Q702	8-729-900-80	TRANSISTOR	DTC114ES	
Q703	8-729-900-80	TRANSISTOR	DTC114ES	
Q704	8-729-820-24	TRANSISTOR	2SC3330-T	
Q705	8-729-820-24	TRANSISTOR	2SC3330-T	
Q706	8-729-900-89	TRANSISTOR	DTC144ES	
Q707	8-729-821-04	TRANSISTOR	2SA1317-STU	
Q708	8-729-900-61	TRANSISTOR	DTA114ES	
Q709	8-729-900-61	TRANSISTOR	DTA114ES	
Q712	8-729-900-65	TRANSISTOR	DTA144ES	
Q713	8-729-900-65	TRANSISTOR	DTA144ES	
Q715	8-729-900-80	TRANSISTOR	DTC114ES	
Q720	8-729-900-80	TRANSISTOR	DTC114ES	
Q721	8-729-801-84	TRANSISTOR	2SB1013-4	
Q801	8-729-140-96	TRANSISTOR	2SD774-34	
Q802	8-729-140-96	TRANSISTOR	2SD774-34	

< RESISTOR >

Ref. No.	Part No.	Description				Remark
R101	1-249-435-11	CARBON	33K	5%	1/4W	
R102	1-249-403-11	CARBON	68	5%	1/4W	F
R103	1-247-882-11	CARBON	130K	5%	1/4W	
R104	1-249-426-11	CARBON	5.6K	5%	1/4W	
R105	1-249-420-11	CARBON	1.8K	5%	1/4W	F
R107	1-247-887-00	CARBON	220K	5%	1/4W	
R108	1-247-840-00	CARBON	2.4K	5%	1/4W	
R110	1-249-423-11	CARBON	3.3K	5%	1/4W	F
R111	1-249-428-11	CARBON	8.2K	5%	1/4W	F
R112	1-247-864-11	CARBON	24K	5%	1/4W	
R113	1-249-414-11	CARBON	560	5%	1/4W	F
R115	1-249-421-11	CARBON	2.2K	5%	1/4W	F
R116	1-249-428-11	CARBON	8.2K	5%	1/4W	F
R117	1-249-417-11	CARBON	1K	5%	1/4W	F
R118	1-249-429-11	CARBON	10K	5%	1/4W	
R119	1-249-425-11	CARBON	4.7K	5%	1/4W	F
R120	1-249-421-11	CARBON	2.2K	5%	1/4W	F
R121	1-249-429-11	CARBON	10K	5%	1/4W	
R122	1-249-425-11	CARBON	4.7K	5%	1/4W	F
R124	1-249-429-11	CARBON	10K	5%	1/4W	
R125	1-249-437-11	CARBON	47K	5%	1/4W	
R126	1-249-431-11	CARBON	15K	5%	1/4W	
R127	1-249-409-11	CARBON	220	5%	1/4W	F
R128	1-249-428-11	CARBON	8.2K	5%	1/4W	F
R129	1-247-883-00	CARBON	150K	5%	1/4W	
R130	1-249-393-11	CARBON	10	5%	1/4W	F
R131	1-249-432-11	CARBON	18K	5%	1/4W	
R132	1-249-429-11	CARBON	10K	5%	1/4W	
R201	1-249-435-11	CARBON	33K	5%	1/4W	
R202	1-249-403-11	CARBON	68	5%	1/4W	F
R203	1-247-882-11	CARBON	130K	5%	1/4W	
R204	1-249-426-11	CARBON	5.6K	5%	1/4W	
R205	1-249-420-11	CARBON	1.8K	5%	1/4W	F
R207	1-247-887-00	CARBON	220K	5%	1/4W	
R208	1-247-840-00	CARBON	2.4K	5%	1/4W	
R210	1-249-423-11	CARBON	3.3K	5%	1/4W	F
R211	1-249-428-11	CARBON	8.2K	5%	1/4W	F
R212	1-247-864-11	CARBON	24K	5%	1/4W	
R213	1-249-414-11	CARBON	560	5%	1/4W	F
R215	1-249-421-11	CARBON	2.2K	5%	1/4W	F
R216	1-249-428-11	CARBON	8.2K	5%	1/4W	F
R217	1-249-417-11	CARBON	1K	5%	1/4W	F
R218	1-249-429-11	CARBON	10K	5%	1/4W	
R219	1-249-425-11	CARBON	4.7K	5%	1/4W	F
R220	1-249-421-11	CARBON	2.2K	5%	1/4W	F
R221	1-249-429-11	CARBON	10K	5%	1/4W	
R222	1-249-425-11	CARBON	4.7K	5%	1/4W	F
R224	1-249-429-11	CARBON	10K	5%	1/4W	
R225	1-249-437-11	CARBON	47K	5%	1/4W	
R226	1-249-431-11	CARBON	15K	5%	1/4W	
R227	1-249-409-11	CARBON	220	5%	1/4W	F
R228	1-249-428-11	CARBON	8.2K	5%	1/4W	F
R229	1-247-883-00	CARBON	150K	5%	1/4W	
R230	1-249-393-11	CARBON	10	5%	1/4W	F
R231	1-249-432-11	CARBON	18K	5%	1/4W	
R232	1-249-429-11	CARBON	10K	5%	1/4W	
R301	1-249-409-11	CARBON	220	5%	1/4W	F
R302	1-249-409-11	CARBON	220	5%	1/4W	F
R303	1-249-433-11	CARBON	22K	5%	1/4W	
R304	1-249-435-11	CARBON	33K	5%	1/4W	
R305	1-249-436-11	CARBON	39K	5%	1/4W	

Continued on page 15.

• IC BLOCK DIAGRAM

IC703,706 BA6219B
IC704 LB1641

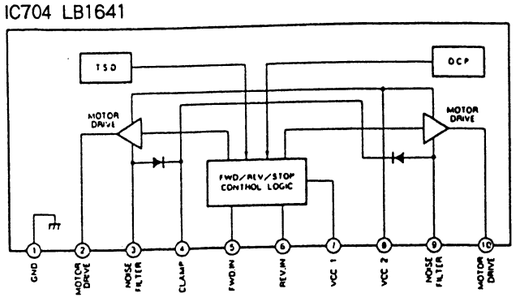

IC302 CXA1330S

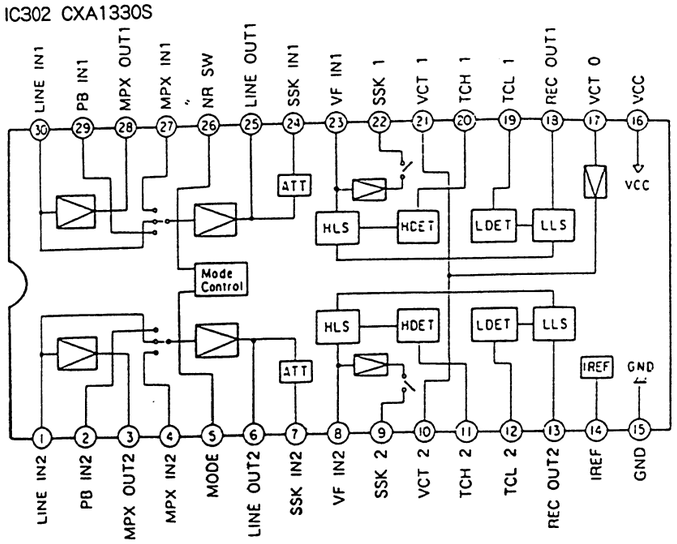

IC303 CXA1198AP

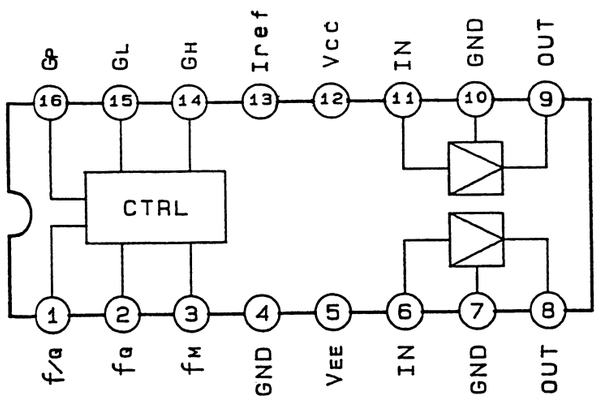

• Semiconductor Location

Ref. No.	Location	Ref. No.	Location
D101	C-12	Q301	G-5
D201	C-13	Q302	I-5
D301	I-5	Q303	I-5
D302	I-5	Q304	J-5
D303	E-11	Q305	I-5
D304	E-11	Q306	D-11
D305	E-1	Q307	E-11
D306	B-4	Q308	F-11
D307	C-4	Q309	E-11
D308	C-4	Q310	E-11
D309	C-4	Q311	E-1
D601	A-20	Q312	B-4
D701	C-17	Q313	B-4
D702	C-17	Q314	B-5
D703	E-12	Q315	C-5
D704	E-12	Q316	F-2
D705	F-12	Q317	E-2
D706	F-12	Q318	F-11
D707	E-14	Q701	F-13
D708	E-14	Q702	F-13
D709	E-13	Q703	E-13
D710	J-2	Q704	D-17
D711	J-2	Q705	C-17
D712	I-2	Q706	C-15
D713	C-15	Q707	C-17
D714	C-17	Q708	B-19
D720	C-10	Q709	H-3
D721	C-11	Q712	B-5
D722	C-12	Q713	B-5
D750	B-13	Q715	I-1
D751	D-14	Q720	I-8
D752	B-19	Q721	J-8
D753	A-19	Q801	B-13
D754	I-8	Q802	B-11
D801	D-16		
D802	C-15		
D803	C-15		
D804	C-14		
D805	C-14		
IC301	C-2		
IC302	E-9		
IC303	I-4		
IC304	H-2		
IC305	D-13		
IC306	D-4		
IC701	E-16		
IC702	B-15		
IC703	E-13		
IC704	D-13		
IC705	D-15		
IC706	I-1		
IC1001	H-18		
IC1002	H-19		
Q101	D-10		
Q102	D-11		
Q103	H-5		
Q201	F-10		
Q202	D-11		
Q203	I-4		

Note on Mounting Diagram:

- ○—— : parts extracted from the component side.
- ■ : parts mounted on the couductor side.

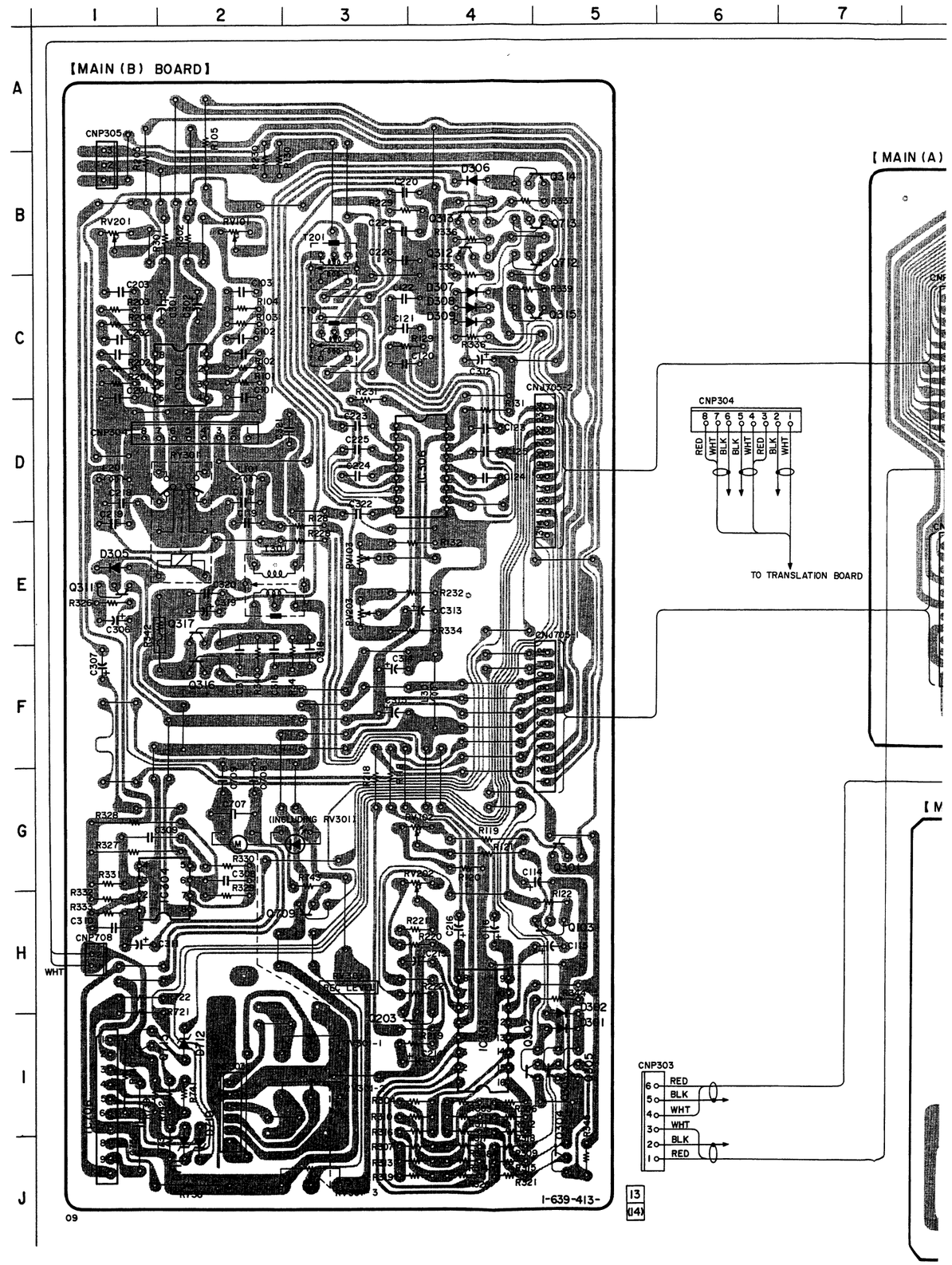

SONY-04687 / Druck 17

• IC BLOCK DIAGRAM

IC703,706 BA6219B
IC704 LB1641

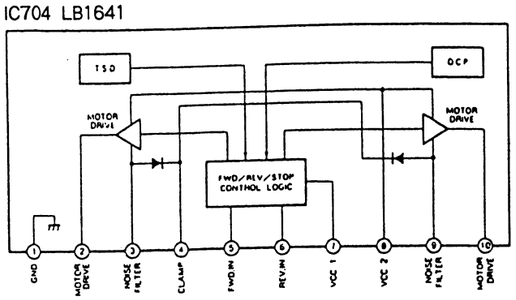

IC302 CXA1330S

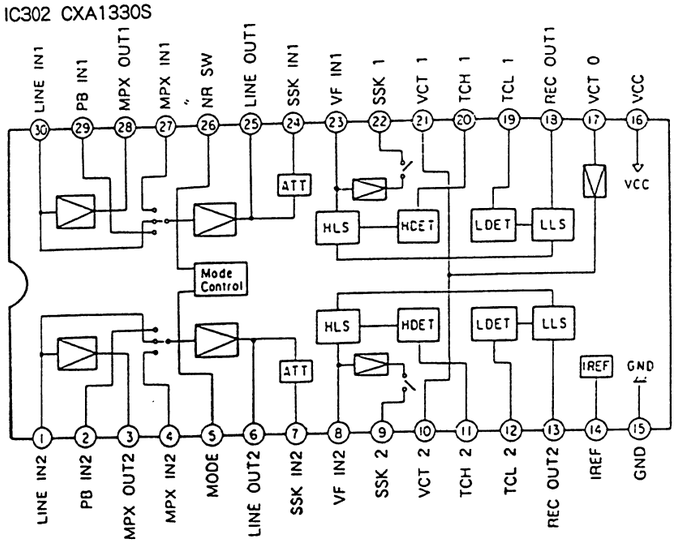

IC303 CXA1198AP

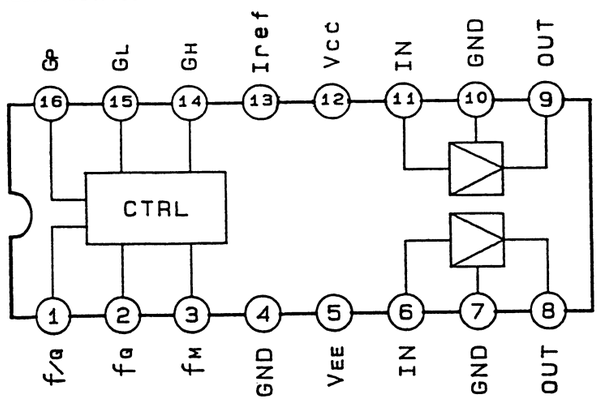

• Semiconductor Location

Ref. No.	Location	Ref. No.	Location
D101	C-12	Q301	G-5
D201	C-13	Q302	I-5
D301	I-5	Q303	I-5
D302	I-5	Q304	J-5
D303	E-11	Q305	I-5
D304	E-11	Q306	D-11
D305	E-1	Q307	E-11
D306	B-4	Q308	F-11
D307	C-4	Q309	E-11
D308	C-4	Q310	E-11
D309	C-4	Q311	E-1
D601	A-20	Q312	B-4
D701	C-17	Q313	B-4
D702	C-17	Q314	B-5
D703	E-12	Q315	C-5
D704	E-12	Q316	F-2
D705	F-12	Q317	E-2
D706	F-12	Q318	F-11
D707	E-14	Q701	F-13
D708	E-14	Q702	F-13
D709	E-13	Q703	E-13
D710	J-2	Q704	D-17
D711	J-2	Q705	C-17
D712	I-2	Q706	C-15
D713	C-15	Q707	C-17
D714	C-17	Q708	B-19
D720	C-10	Q709	H-3
D721	C-11	Q712	B-5
D722	C-12	Q713	B-5
D750	B-13	Q715	I-1
D751	D-14	Q720	I-8
D752	B-19	Q721	J-8
D753	A-19	Q801	B-13
D754	I-8	Q802	B-11
D801	D-16		
D802	C-15		
D803	C-15		
D804	C-14		
D805	C-14		
IC301	C-2		
IC302	E-9		
IC303	I-4		
IC304	H-2		
IC305	D-13		
IC306	D-4		
IC701	E-16		
IC702	B-15		
IC703	E-13		
IC704	D-13		
IC705	D-15		
IC706	I-1		
IC1001	H-18		
IC1002	H-19		
Q101	D-10		
Q102	D-11		
Q103	H-5		
Q201	F-10		
Q202	D-11		
Q203	I-4		

Note on Mounting Diagram:

- ○—— : parts extracted from the component side.
- ■ : parts mounted on the couductor side.

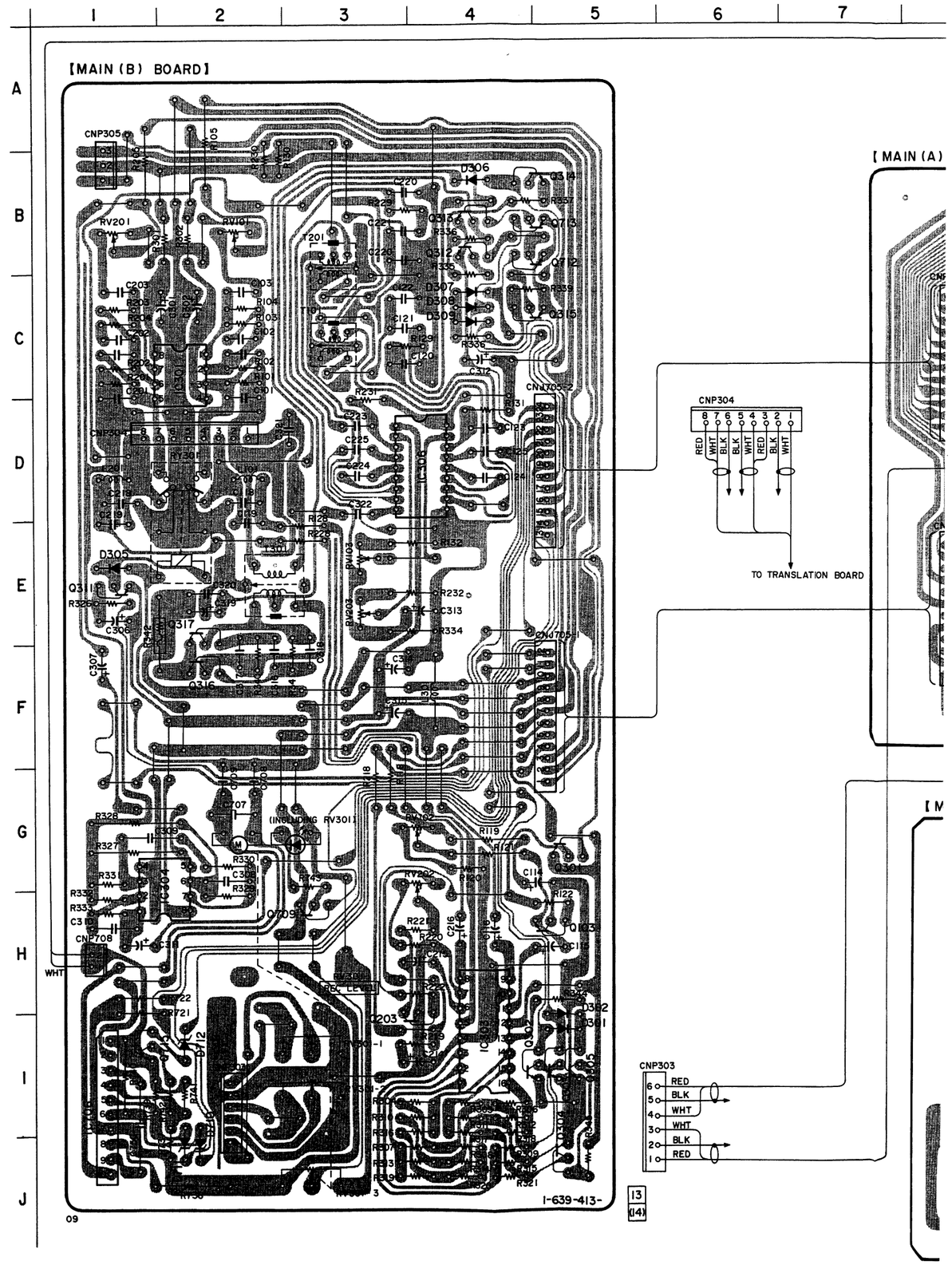

SHCEMATIC DIAGRAM — MAIN SECTION —

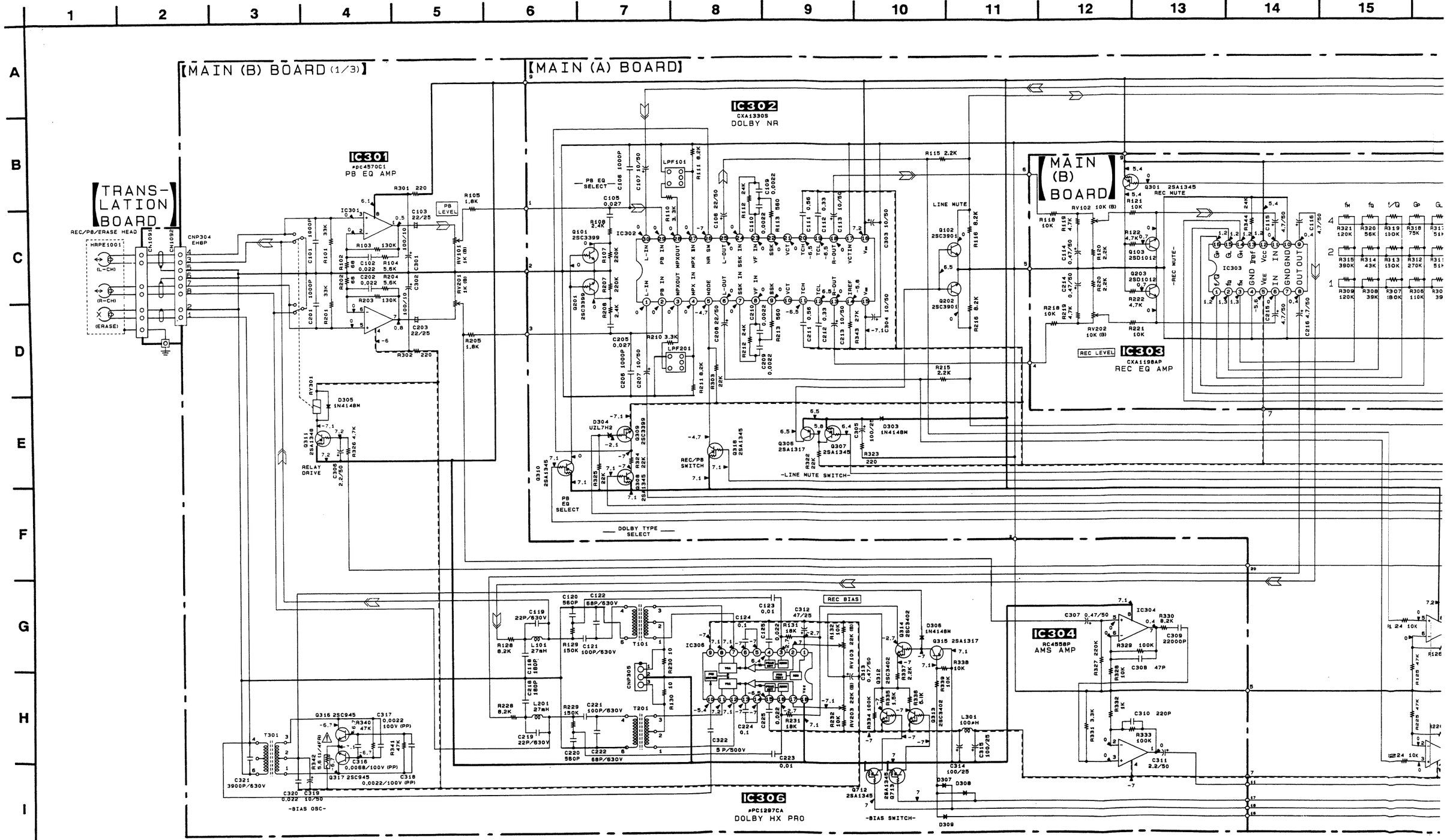

Note on Schematic Diagram:

- All capacitors are in μF unless otherwise noted. pF: μμF 50WV or less are not indicated except for electrolytics and tantalums.
- All resistors are in Ω and 1/4W or less unless otherwise specified.
- ⊟: fusible resistor.

Note:
The components identified by mark ⚠ or dotted line with mark ⚠ are critical for safety. Replace only with part number specified.

SONY-04687 / Druck 19

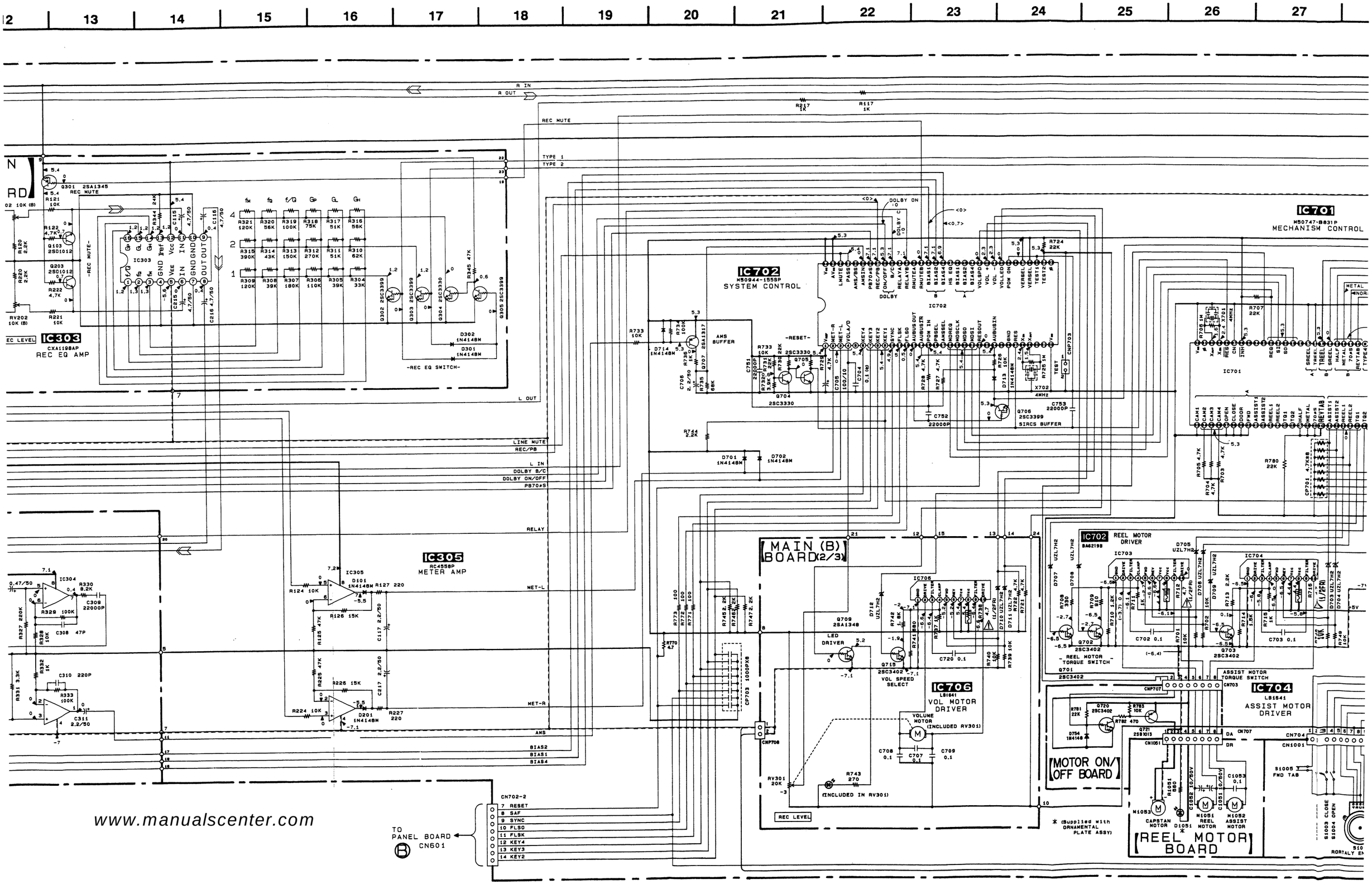

SONY-04687 / Druck 20

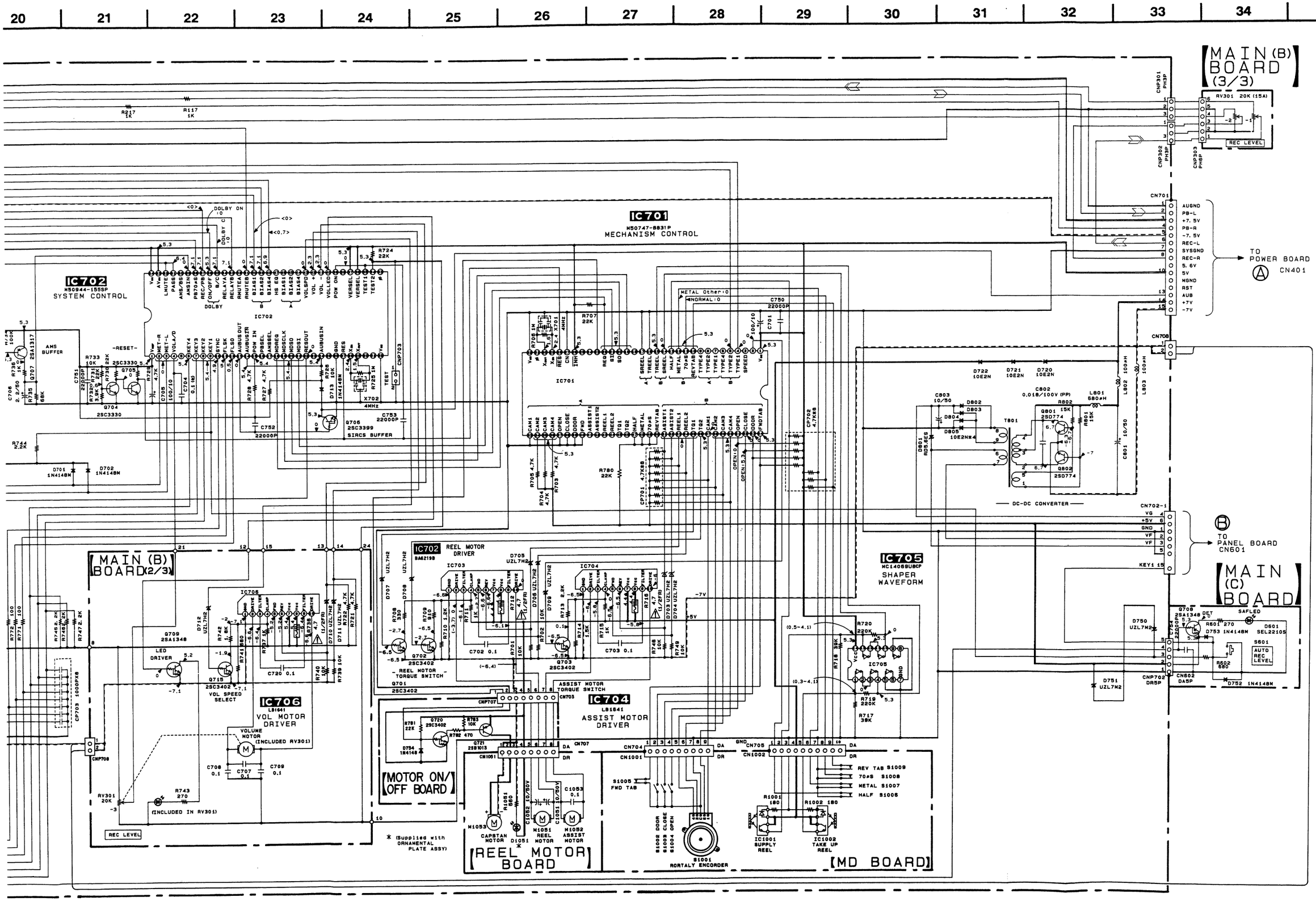

SONY-04687 / Druck 21

Continued from page 4.

Ref. No.	Part No.	Description				Remark
R306	1-247-880-11	CARBON	110K	5%	1/4W	
R307	1-247-885-00	CARBON	180K	5%	1/4W	
R308	1-249-436-11	CARBON	39K	5%	1/4W	
R309	1-247-881-00	CARBON	120K	5%	1/4W	
R310	1-247-874-11	CARBON	62K	5%	1/4W	
R311	1-247-872-11	CARBON	51K	5%	1/4W	
R312	1-247-889-00	CARBON	270K	5%	1/4W	
R313	1-247-883-00	CARBON	150K	5%	1/4W	
R314	1-247-870-11	CARBON	43K	5%	1/4W	
R315	1-247-893-11	CARBON	390K	5%	1/4W	
R316	1-249-438-11	CARBON	56K	5%	1/4W	
R317	1-247-872-11	CARBON	51K	5%	1/4W	
R318	1-247-876-11	CARBON	75K	5%	1/4W	
R319	1-249-441-11	CARBON	100K	5%	1/4W	
R320	1-249-438-11	CARBON	56K	5%	1/4W	
R321	1-247-881-00	CARBON	120K	5%	1/4W	
R322	1-249-433-11	CARBON	22K	5%	1/4W	
R323	1-249-409-11	CARBON	220	5%	1/4W	F
R324	1-249-433-11	CARBON	22K	5%	1/4W	
R325	1-249-433-11	CARBON	22K	5%	1/4W	
R326	1-249-425-11	CARBON	4.7K	5%	1/4W	F
R327	1-247-887-00	CARBON	220K	5%	1/4W	
R328	1-249-429-11	CARBON	10K	5%	1/4W	
R329	1-249-441-11	CARBON	100K	5%	1/4W	
R330	1-249-428-11	CARBON	8.2K	5%	1/4W	F
R331	1-249-423-11	CARBON	3.3K	5%	1/4W	F
R332	1-249-417-11	CARBON	1K	5%	1/4W	F
R333	1-249-441-11	CARBON	100K	5%	1/4W	
R334	1-249-441-11	CARBON	100K	5%	1/4W	
R335	1-249-419-11	CARBON	1.5K	5%	1/4W	F
R336	1-247-848-11	CARBON	5.1K	5%	1/4W	
R337	1-249-421-11	CARBON	2.2K	5%	1/4W	F
R338	1-249-429-11	CARBON	10K	5%	1/4W	
R339	1-249-429-11	CARBON	10K	5%	1/4W	
R340	1-249-437-11	CARBON	47K	5%	1/4W	
R341	1-249-437-11	CARBON	47K	5%	1/4W	
⚠R342	1-212-851-00	FUSIBLE	5.6	5%	1/4W	F
R343	1-215-455-00	METAL	27K	1%	1/6W	
R344	1-247-864-11	CARBON	24K	5%	1/4W	
R345	1-249-437-11	CARBON	47K	5%	1/4W	
R601	1-249-410-11	CARBON	270	5%	1/4W	F
R602	1-249-415-11	CARBON	680	5%	1/4W	F
R701	1-249-429-11	CARBON	10K	5%	1/4W	
R702	1-249-429-11	CARBON	10K	5%	1/4W	
R703	1-249-425-11	CARBON	4.7K	5%	1/4W	F
R704	1-249-425-11	CARBON	4.7K	5%	1/4W	F
R705	1-249-425-11	CARBON	4.7K	5%	1/4W	F
R706	1-247-903-00	CARBON	1M	5%	1/4W	
R707	1-249-433-11	CARBON	22K	5%	1/4W	
R708	1-249-411-11	CARBON	330	5%	1/4W	

Ref. No.	Part No.	Description				Remark
R709	1-247-830-11	CARBON	910	5%	1/4W	
R710	1-249-418-11	CARBON	1.2K	5%	1/4W	F
R711	1-249-417-11	CARBON	1K	5%	1/4W	F
⚠R712	1-212-950-00	FUSIBLE	4.7	5%	1/2W	F
R713	1-249-421-11	CARBON	2.2K	5%	1/4W	F
R714	1-249-419-11	CARBON	1.5K	5%	1/4W	F
R715	1-249-417-11	CARBON	1K	5%	1/4W	F
⚠R716	1-212-950-00	FUSIBLE	4.7	5%	1/2W	F
R717	1-249-436-11	CARBON	39K	5%	1/4W	
R718	1-249-436-11	CARBON	39K	5%	1/4W	
R719	1-247-887-00	CARBON	220K	5%	1/4W	
R720	1-247-887-00	CARBON	220K	5%	1/4W	
R721	1-249-425-11	CARBON	4.7K	5%	1/4W	F
R722	1-249-425-11	CARBON	4.7K	5%	1/4W	F
R724	1-249-433-11	CARBON	22K	5%	1/4W	
R725	1-247-903-00	CARBON	1M	5%	1/4W	
R726	1-249-429-11	CARBON	10K	5%	1/4W	
R727	1-249-425-11	CARBON	4.7K	5%	1/4W	F
R728	1-249-425-11	CARBON	4.7K	5%	1/4W	F
R729	1-249-425-11	CARBON	4.7K	5%	1/4W	F
R730	1-249-433-11	CARBON	22K	5%	1/4W	
R731	1-249-433-11	CARBON	22K	5%	1/4W	
R732	1-249-424-11	CARBON	3.9K	5%	1/4W	F
R733	1-249-429-11	CARBON	10K	5%	1/4W	
R734	1-249-441-11	CARBON	100K	5%	1/4W	
R735	1-249-439-11	CARBON	68K	5%	1/4W	
R736	1-249-417-11	CARBON	1K	5%	1/4W	F
R737	1-249-417-11	CARBON	1K	5%	1/4W	F
⚠R738	1-212-950-00	FUSIBLE	4.7	5%	1/2W	F
R739	1-249-429-11	CARBON	10K	5%	1/4W	
R740	1-249-429-11	CARBON	10K	5%	1/4W	
R741	1-249-415-11	CARBON	680	5%	1/4W	F
R742	1-249-420-11	CARBON	1.8K	5%	1/4W	F
R743	1-249-410-11	CARBON	270	5%	1/4W	F
R744	1-249-421-11	CARBON	2.2K	5%	1/4W	F
R745	1-249-421-11	CARBON	2.2K	5%	1/4W	F
R746	1-249-421-11	CARBON	2.2K	5%	1/4W	F
R747	1-249-421-11	CARBON	2.2K	5%	1/4W	F
R748	1-249-429-11	CARBON	10K	5%	1/4W	
R749	1-249-429-11	CARBON	10K	5%	1/4W	
R770	1-249-389-11	CARBON	4.7	5%	1/4W	F
R771	1-247-807-31	CARBON	100	5%	1/4W	
R772	1-247-807-31	CARBON	100	5%	1/4W	
R773	1-247-807-31	CARBON	100	5%	1/4W	
R780	1-249-433-11	CARBON	22K	5%	1/4W	
R781	1-249-433-11	CARBON	22K	5%	1/4W	
R782	1-249-413-11	CARBON	470	5%	1/4W	F
R783	1-249-429-11	CARBON	10K	5%	1/4W	
R801	1-249-431-11	CARBON	15K	5%	1/4W	
R802	1-249-431-11	CARBON	15K	5%	1/4W	

The components identified by mark ⚠ or dotted line with mark ⚠ are critical for safety.
Replace only with part number specified.

Ref. No.	Part No.	Description	Remark
		< VARIABLE RESISTOR >	
RV101	1-238-597-11	RES, ADJ, CARBON 1K	
RV102	1-238-600-11	RES, ADJ, CARBON 10K	
RV103	1-238-601-11	RES, ADJ, CARBON 22K	
RV201	1-238-597-11	RES, ADJ, CARBON 1K	
RV202	1-238-600-11	RES, ADJ, CARBON 10K	
RV203	1-238-601-11	RES, ADJ, CARBON 22K	
RV301	1-241-232-11	RES, VAR, CARBON 20K/20K/20K (REC LEVEL)	
		< RELAY >	
RY301	1-515-726-11	RELAY	
		< SWITCH >	
S601	1-554-303-21	SWITCH, TACTILE (AUTO REC LEVEL)	
S605	1-554-303-21	SWITCH, TACTILE (⏏ OPEN/CLOSE)	
		< TRANSFORMER >	
T101	1-433-335-11	TRANSFORMER, BIAS OSCILLATION	
T201	1-433-335-11	TRANSFORMER, BIAS OSCILLATION	
T301	1-433-336-11	TRANSFORMER, BIAS OSCILLATION	
T801	1-450-673-11	TRANSFORMER, DC-DC CONVERTER	
		< VIBRATOR >	
X701	1-577-358-21	VIBRATOR, CERAMIC (4MHz)	
X702	1-577-358-21	VIBRATOR, CERAMIC (4MHz)	
**********			
*	1-632-741-11	REEL MOTOR BOARD	
		**********	
		< CAPACITOR >	
C1051	1-124-907-11	ELECT 10uF 20% 50V	
C1052	1-124-907-11	ELECT 10uF 20% 50V	
C1053	1-164-159-11	CERAMIC 0.1uF 50V	
		< CONNECTOR >	
CN1051	1-564-501-11	PIN, CONNECTOR 8P	
* CN1052	1-564-718-11	PIN, CONNECTOR (SMALL TYPE) 2P	
* CN1053	1-564-718-11	PIN, CONNECTOR (SMALL TYPE) 2P	
		< RESISTOR >	
R1051	1-247-825-31	CARBON 560 5% 1/4W	
**********			

Continued from page 4.

Ref. No.	Part No.	Description				Remark
R306	1-247-880-11	CARBON	110K	5%	1/4W	
R307	1-247-885-00	CARBON	180K	5%	1/4W	
R308	1-249-436-11	CARBON	39K	5%	1/4W	
R309	1-247-881-00	CARBON	120K	5%	1/4W	
R310	1-247-874-11	CARBON	62K	5%	1/4W	
R311	1-247-872-11	CARBON	51K	5%	1/4W	
R312	1-247-889-00	CARBON	270K	5%	1/4W	
R313	1-247-883-00	CARBON	150K	5%	1/4W	
R314	1-247-870-11	CARBON	43K	5%	1/4W	
R315	1-247-893-11	CARBON	390K	5%	1/4W	
R316	1-249-438-11	CARBON	56K	5%	1/4W	
R317	1-247-872-11	CARBON	51K	5%	1/4W	
R318	1-247-876-11	CARBON	75K	5%	1/4W	
R319	1-249-441-11	CARBON	100K	5%	1/4W	
R320	1-249-438-11	CARBON	56K	5%	1/4W	
R321	1-247-881-00	CARBON	120K	5%	1/4W	
R322	1-249-433-11	CARBON	22K	5%	1/4W	
R323	1-249-409-11	CARBON	220	5%	1/4W	F
R324	1-249-433-11	CARBON	22K	5%	1/4W	
R325	1-249-433-11	CARBON	22K	5%	1/4W	
R326	1-249-425-11	CARBON	4.7K	5%	1/4W	F
R327	1-247-887-00	CARBON	220K	5%	1/4W	
R328	1-249-429-11	CARBON	10K	5%	1/4W	
R329	1-249-441-11	CARBON	100K	5%	1/4W	
R330	1-249-428-11	CARBON	8.2K	5%	1/4W	F
R331	1-249-423-11	CARBON	3.3K	5%	1/4W	F
R332	1-249-417-11	CARBON	1K	5%	1/4W	F
R333	1-249-441-11	CARBON	100K	5%	1/4W	
R334	1-249-441-11	CARBON	100K	5%	1/4W	
R335	1-249-419-11	CARBON	1.5K	5%	1/4W	F
R336	1-247-848-11	CARBON	5.1K	5%	1/4W	
R337	1-249-421-11	CARBON	2.2K	5%	1/4W	F
R338	1-249-429-11	CARBON	10K	5%	1/4W	
R339	1-249-429-11	CARBON	10K	5%	1/4W	
R340	1-249-437-11	CARBON	47K	5%	1/4W	
R341	1-249-437-11	CARBON	47K	5%	1/4W	
⚠R342	1-212-851-00	FUSIBLE	5.6	5%	1/4W	F
R343	1-215-455-00	METAL	27K	1%	1/6W	
R344	1-247-864-11	CARBON	24K	5%	1/4W	
R345	1-249-437-11	CARBON	47K	5%	1/4W	
R601	1-249-410-11	CARBON	270	5%	1/4W	F
R602	1-249-415-11	CARBON	680	5%	1/4W	F
R701	1-249-429-11	CARBON	10K	5%	1/4W	
R702	1-249-429-11	CARBON	10K	5%	1/4W	
R703	1-249-425-11	CARBON	4.7K	5%	1/4W	F
R704	1-249-425-11	CARBON	4.7K	5%	1/4W	F
R705	1-249-425-11	CARBON	4.7K	5%	1/4W	F
R706	1-247-903-00	CARBON	1M	5%	1/4W	
R707	1-249-433-11	CARBON	22K	5%	1/4W	
R708	1-249-411-11	CARBON	330	5%	1/4W	

Ref. No.	Part No.	Description				Remark
R709	1-247-830-11	CARBON	910	5%	1/4W	
R710	1-249-418-11	CARBON	1.2K	5%	1/4W	F
R711	1-249-417-11	CARBON	1K	5%	1/4W	F
⚠R712	1-212-950-00	FUSIBLE	4.7	5%	1/2W	F
R713	1-249-421-11	CARBON	2.2K	5%	1/4W	F
R714	1-249-419-11	CARBON	1.5K	5%	1/4W	F
R715	1-249-417-11	CARBON	1K	5%	1/4W	F
⚠R716	1-212-950-00	FUSIBLE	4.7	5%	1/2W	F
R717	1-249-436-11	CARBON	39K	5%	1/4W	
R718	1-249-436-11	CARBON	39K	5%	1/4W	
R719	1-247-887-00	CARBON	220K	5%	1/4W	
R720	1-247-887-00	CARBON	220K	5%	1/4W	
R721	1-249-425-11	CARBON	4.7K	5%	1/4W	F
R722	1-249-425-11	CARBON	4.7K	5%	1/4W	F
R724	1-249-433-11	CARBON	22K	5%	1/4W	
R725	1-247-903-00	CARBON	1M	5%	1/4W	
R726	1-249-429-11	CARBON	10K	5%	1/4W	
R727	1-249-425-11	CARBON	4.7K	5%	1/4W	F
R728	1-249-425-11	CARBON	4.7K	5%	1/4W	F
R729	1-249-425-11	CARBON	4.7K	5%	1/4W	F
R730	1-249-433-11	CARBON	22K	5%	1/4W	
R731	1-249-433-11	CARBON	22K	5%	1/4W	
R732	1-249-424-11	CARBON	3.9K	5%	1/4W	F
R733	1-249-429-11	CARBON	10K	5%	1/4W	
R734	1-249-441-11	CARBON	100K	5%	1/4W	
R735	1-249-439-11	CARBON	68K	5%	1/4W	
R736	1-249-417-11	CARBON	1K	5%	1/4W	F
R737	1-249-417-11	CARBON	1K	5%	1/4W	F
⚠R738	1-212-950-00	FUSIBLE	4.7	5%	1/2W	F
R739	1-249-429-11	CARBON	10K	5%	1/4W	
R740	1-249-429-11	CARBON	10K	5%	1/4W	
R741	1-249-415-11	CARBON	680	5%	1/4W	F
R742	1-249-420-11	CARBON	1.8K	5%	1/4W	F
R743	1-249-410-11	CARBON	270	5%	1/4W	F
R744	1-249-421-11	CARBON	2.2K	5%	1/4W	F
R745	1-249-421-11	CARBON	2.2K	5%	1/4W	F
R746	1-249-421-11	CARBON	2.2K	5%	1/4W	F
R747	1-249-421-11	CARBON	2.2K	5%	1/4W	F
R748	1-249-429-11	CARBON	10K	5%	1/4W	
R749	1-249-429-11	CARBON	10K	5%	1/4W	
R770	1-249-389-11	CARBON	4.7	5%	1/4W	F
R771	1-247-807-31	CARBON	100	5%	1/4W	
R772	1-247-807-31	CARBON	100	5%	1/4W	
R773	1-247-807-31	CARBON	100	5%	1/4W	
R780	1-249-433-11	CARBON	22K	5%	1/4W	
R781	1-249-433-11	CARBON	22K	5%	1/4W	
R782	1-249-413-11	CARBON	470	5%	1/4W	F
R783	1-249-429-11	CARBON	10K	5%	1/4W	
R801	1-249-431-11	CARBON	15K	5%	1/4W	
R802	1-249-431-11	CARBON	15K	5%	1/4W	

The components identified by mark ⚠ or dotted line with mark ⚠ are critical for safety.
Replace only with part number specified.

Ref. No.	Part No.	Description	Remark
		< VARIABLE RESISTOR >	
RV101	1-238-597-11	RES, ADJ, CARBON 1K	
RV102	1-238-600-11	RES, ADJ, CARBON 10K	
RV103	1-238-601-11	RES, ADJ, CARBON 22K	
RV201	1-238-597-11	RES, ADJ, CARBON 1K	
RV202	1-238-600-11	RES, ADJ, CARBON 10K	
RV203	1-238-601-11	RES, ADJ, CARBON 22K	
RV301	1-241-232-11	RES, VAR, CARBON 20K/20K/20K (REC LEVEL)	
		< RELAY >	
RY301	1-515-726-11	RELAY	
		< SWITCH >	
S601	1-554-303-21	SWITCH, TACTILE (AUTO REC LEVEL)	
S605	1-554-303-21	SWITCH, TACTILE (⏏ OPEN/CLOSE)	
		< TRANSFORMER >	
T101	1-433-335-11	TRANSFORMER, BIAS OSCILLATION	
T201	1-433-335-11	TRANSFORMER, BIAS OSCILLATION	
T301	1-433-336-11	TRANSFORMER, BIAS OSCILLATION	
T801	1-450-673-11	TRANSFORMER, DC-DC CONVERTER	
		< VIBRATOR >	
X701	1-577-358-21	VIBRATOR, CERAMIC (4MHz)	
X702	1-577-358-21	VIBRATOR, CERAMIC (4MHz)	

****

Ref. No.	Part No.	Description				Remark
*	1-632-741-11	REEL MOTOR BOARD				
		**********				
		< CAPACITOR >				
C1051	1-124-907-11	ELECT	10uF	20%	50V	
C1052	1-124-907-11	ELECT	10uF	20%	50V	
C1053	1-164-159-11	CERAMIC	0.1uF		50V	
		< CONNECTOR >				
CN1051	1-564-501-11	PIN, CONNECTOR 8P				
* CN1052	1-564-718-11	PIN, CONNECTOR (SMALL TYPE) 2P				
* CN1053	1-564-718-11	PIN, CONNECTOR (SMALL TYPE) 2P				
		< RESISTOR >				
R1051	1-247-825-31	CARBON	560	5%	1/4W	

****

SONY-04687 / Druck 23

SS-H6600

SERVICE MANUAL

AEP Model
UK Model
E Model

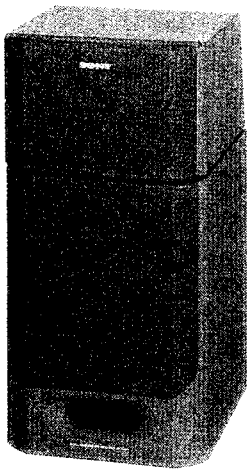

This set is the speaker system in
MHC-5600, MHC-6600, FH-E939CD, and FH-E949CD.

SPECIFICATIONS

Speaker system 3-way, 4-box type

Satellite unit
Speaker units Mid-range: 8cm(3 in.) cone type
Tweeter: 2cm($^{13}/_{16}$in.) soft dome type
Power handling capacity
Maximum input power 50W
Sensitivity 89 dB/W/m
Effective frequency range
200-20,000 Hz
Rated impedance 8 ohms
Dimensions Approx. 185x115x220mm(w/h/d)
($7^{3}/_{8}$ x $4^{5}/_{8}$ x $8^{3}/_{4}$ in.)
Weight Approx. 1.7 kg (3 lb 12 oz)

Bass unit
Speaker unit Woofer: 15cm(6 in.) cone type
Power handling capacity
Maximum input power 70W
Sensitivity 89 dB/W/m
Effective frequency range
40-200 Hz
Rated impedance 6 ohms
Dimensions Approx. 185x250x220mm(w/h/d)
($7^{3}/_{8}$ x $9^{7}/_{8}$ x $8^{3}/_{4}$ in.)
Weight Approx. 4.1 kg (9 lb 1 oz)

Design and specifications subject to change without notice.

1. FRONT PANEL (W) ASSY REMOVAL

Note : Be careful not to scratch the cabinet.

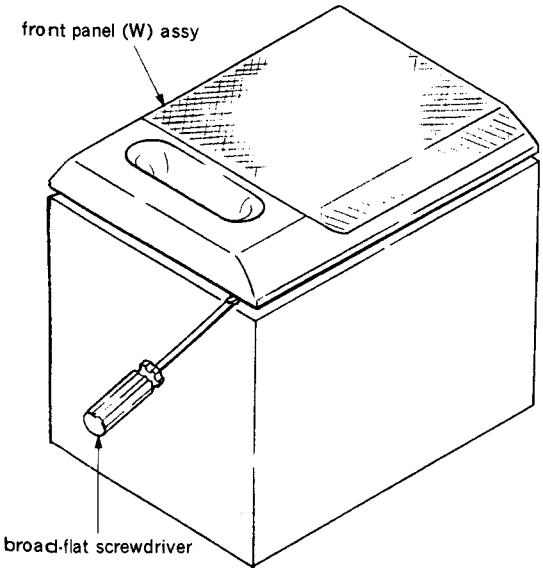

2. WIRING DIAGRAM

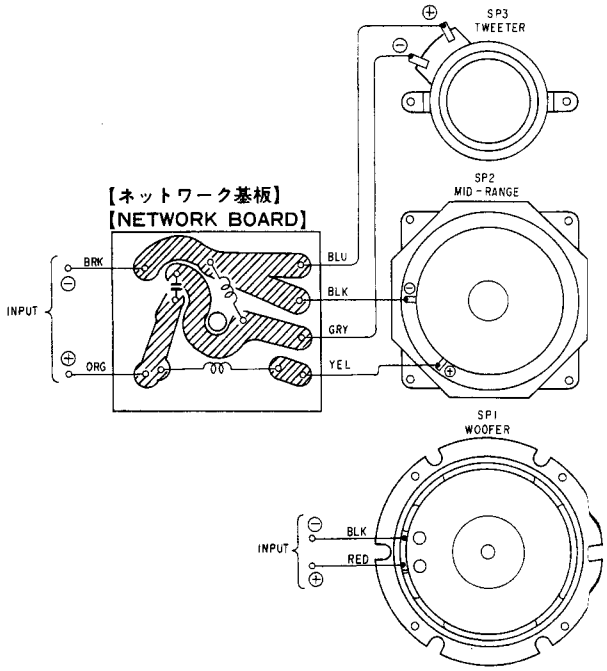

SPEAKER SYSTEM

SONY®

3. EXPLODED VIEW AND PARTS LIST

NOTE:

- The mechanical parts with no reference number in the exploded views are not supplied.
- Items marked "*" are not stocked since they are seldom required for routine service. Some delay should be anticipated when ordering these items.
- -XX, -X mean standardized parts, so they may have some differences from the original one.
- Color Indication of Appearance Parts
  Example:
  KNOB, BALANCE (WHITE)...(RED)
  ↑ Parts Color ↑ Cabinet's Color

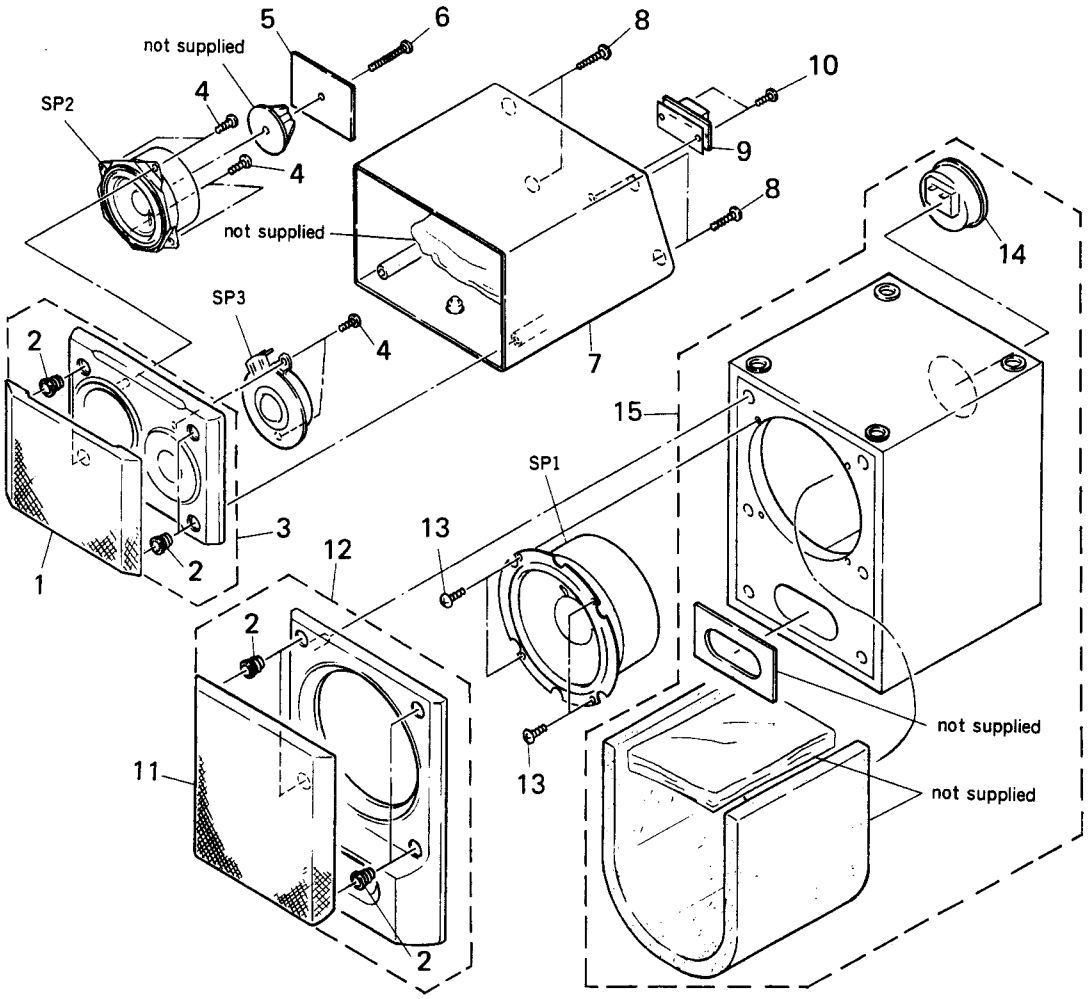

Ref.No	Part No.	Description	Remarks
1	X-4941-269-1	FRAME (S) ASSY, GRILLE	
2	*4-912-253-01	CATCHER	
3	X-4941-370-1	PANEL (S) ASSY, FRONT	
4	7-685-660-79	SCREW +BVTP 4×10 TYPE2 IT-3	
5	*1-589-323-11	MOUNTED PC BOARD (NETWORK)	
6	7-685-878-01	SCREW +BVTT 3×25 (S)	
7	X-4941-270-1	CABINET (S) ASSY, SPEAKER	
8	7-685-663-79	SCREW +BVTP 4×16 TYPE2 IT-3	
9	1-537-337-31	TERMINAL BOARD (2P SP)	
10	7-685-647-79	SCREW +BVTP 3×10 TYPE2 N-S	

Ref.No	Part No.	Description	Remarks
11	X-4941-271-1	FRAME (W) ASSY, GRILLE	
12	X-4941-439-2	PANEL (W) ASSY, FRONT	
13	4-874-614-11	SCREW (4) (3.5×14), TAPPING	
14	1-537-145-11	TERMINAL BOARD (SPEAKER)	
15	X-4941-398-1	CABINET (W) ASSY, SPEAKER (AEP, UK, E)	
15	X-4941-399-1	CABINET (W) ASSY, SPEAKER (Germany)	
SP1	1-544-434-21	SPEAKER (15CM)	
SP2	1-544-433-11	SPEAKER (8CM)	
SP3	1-544-432-11	SPEAKER (2.5CM)	

ACCESSORY&PACKING MATERIAL
****

1-590-855-11	CORD, SPEAKER (AEP, Germany)
3-753-188-11	MANUAL, INSTRUCTION (AEP, Germany)
3-694-922-01	SHEET, PROTECTION

9-956-320-11

Sony Corporation
Audio Group

Published by Customer Relations and Service Group