CDX-2500R

SERVICE MANUAL

AEP Model
UK Model

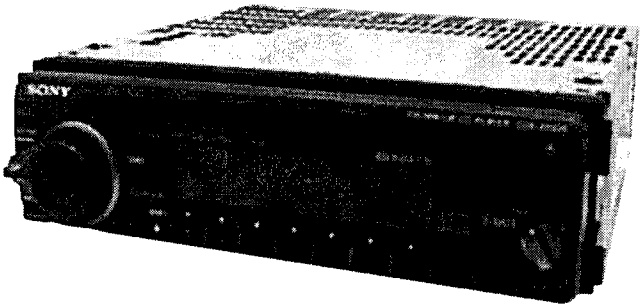

Model Name Using Similar Mechanism	CDX-4270R
CD Drive Mechanism Type	MG-363X-121
Optical Pick-up Name	KSS-521A

SPECIFICATIONS

CD player section

System	Compact disc digital audio system
Signal-to-noise ratio	80 dB
Frequency response	10 – 20,000 Hz
Wow and flutter	Below measurable limit

Tuner section

FM

Tuning range	87.5 – 108.0 MHz
Aerial terminal	External aerial connector
Intermediate frequency	10.7 MHz
Usable sensitivity	12 dBf
Selectivity	75 dB at 400 kHz
Signal-to-noise ratio	65 dB (stereo), 68 dB (mono)
Harmonic distortion at 1 kHz	0.8% (stereo), 0.6% (mono)
Separation	35 dB at 1 kHz
Frequency response	30 – 15,000 Hz

MW/LW

Tuning range	MW: 531 – 1,602 kHz LW: 153 – 281 kHz
Aerial terminal	External aerial connector
Intermediate frequency	10.7 MHz / 450 kHz
Sensitivity	MW: 30 μV LW: 50 μV

Power amplifier section

Outputs	Speaker outputs (sure seal connectors)
Speaker impedance	4 – 8 ohms
Maximum power output	45 W × 4 (at 4 ohms)

General

Outputs	Power aerial relay control lead Telephone ATT control lead
Tone controls	Bass ±8 dB at 100 Hz Treble ±8 dB at 10 kHz
Power requirements	12 V DC car battery (negative ground)
Dimensions	Approx. 178 × 50 × 185 mm (w/h/d)
Mounting dimension	Approx. 182 × 53 × 162 mm (w/h/d)
Mass	Approx. 1.2 kg
Supplied accessories	Parts for installation and connections (1 set) Front panel case (1)

Design and specifications are subject to change without notice.

FM/MW/LW COMPACT DISC PLAYER

www.manualscenter.com

SONY®

SERVICE NOTE

CAUTION
Use of controls or adjustments or performance of procedures other than those specified herein may result in hazardous radiation exposure.

Notes on Chip Component Replacement

- Never reuse a disconnected chip component.
- Notice that the minus side of a tantalum capacitor may be damaged by heat.

NOTES ON HANDLING THE OPTICAL PICK-UP BLOCK OR BASE UNIT

The laser diode in the optical pick-up block may suffer electrostatic breakdown because of the potential difference generated by the charged electrostatic load, etc. on clothing and the human body.
During repair, pay attention to electrostatic breakdown and also use the procedure in the printed matter which is included in the repair parts.
The flexible board is easily damaged and should be handled with care.

NOTES ON LASER DIODE EMISSION CHECK

The laser beam on this model is concentrated so as to be focused on the disc reflective surface by the objective lens in the optical pick-up block. Therefore, when checking the laser diode emission, observe from more than 30 cm away from the objective lens.

NOTES ON PICK-UP FLEXIBLE BOARD

The pick-up flexible board in this set is secured to the optical pick-up with an adhesive tape. Once the tape is removed, an adhering force becomes weak, and it cannot be reused.
Therefore, if the optical pick-up is replaced, replace also the pick-up flexible board with a new one.

SAFETY-RELATED COMPONENT WARNING!!

COMPONENTS IDENTIFIED BY MARK ⚠ OR DOTTED LINE WITH MARK ⚠ ON THE SCHEMATIC DIAGRAMS AND IN THE PARTS LIST ARE CRITICAL TO SAFE OPERATION. REPLACE THESE COMPONENTS WITH SONY PARTS WHOSE PART NUMBERS APPEAR AS SHOWN IN THIS MANUAL OR IN SUPPLEMENTS PUBLISHED BY SONY.

www.manualscenter.com

TABLE OF CONTENTS

1. GENERAL

Location of controls 4
Getting Started 4
Setting the clock 4
CD Player 4
Radio 5
RDS 5
Other Functions 6
Connections 8

2. DISASSEMBLY

2-1. Cover 10
2-2. Front Panel Assy 10
2-3. Sub Panel (1) Assy 11
2-4. CD Mechanism Block 11
2-5. Main Board 12
2-6. Heat Sink 12
2-7. Chassis (T) Sub Assy 13
2-8. Lever Assy 13
2-9. Servo Board 14
2-10. Roller Assy 14
2-11. Chassis (OP) (O/S) Assy 15
2-12. Optical Pick-up Block 15

3. ELECTRICAL ADJUSTMENTS

Tuner Section 16
CD Section 19

4. DIAGRAMS

4-1. IC Pin Description 20
4-2. Block Diagram –CD Section– 22
4-3. Block Diagram –Tuner Section– 23
4-4. Block Diagram –Display Section– 24
4-5. Circuit Boards Location 25
4-6. Printed Wiring Boards –CD Mechanism Section– 26
4-7. Schematic Diagram –CD Mechanism Section– 27
4-8. Printed Wiring Board –Main Section– 28
4-9. Schematic Diagram –Main Section (1/3)– 30
4-10. Schematic Diagram –Main Section (2/3)– 31
4-11. Schematic Diagram –Main Section (3/3)– 32
4-12. Schematic Diagram –Display Section– 33
4-13. Printed Wiring Board –Display Section– 34

5. EXPLODED VIEWS

5-1. Chassis Section 39
5-2. Front Panel Section 40
5-3. CD Mechanism Section (1) 41
5-4. CD Mechanism Section (2) 42
5-5. CD Mechanism Section (3) 43

6. ELECTRICAL PARTS LIST 44

www.manualscenter.com

SECTION 1
GENERAL

This section is extracted from instruction manual.

Location of controls

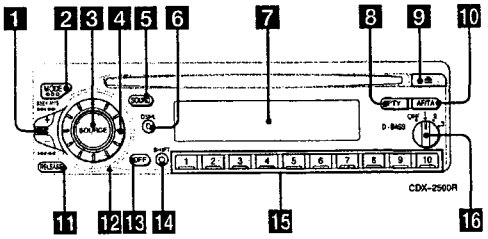

Refer to the pages for details.

1. SEEK/AMS (seek/Automatic Music Sensor/manual search) control 7, 9, 11, 14
2. MODE (band/unit select) button 8, 9
3. SOURCE (source select) button 7, 8, 9, 13
4. Dial (volume/bass/treble/left-right/front-rear) 6, 17
5. SOUND button 17
6. DSPL (display mode change) button 7, 10, 11
7. Display window
8. PTY button 14
9. ≜ (eject) button 7
10. AF/TA button 11, 12, 13
11. RELEASE (front panel release) button 5, 20
12. Reset button (located on the front side of the unit behind the front panel) 5
13. OFF button* 5, 7
14. SHIFT button
    PLAY MODE 8, 9, 10, 12, 13
    REP 8
    SET UP 6, 15, 18
    SHUF 8
15. During radio reception: Number buttons 9, 12, 13
16. D-BASS control 19

***Warning when installing in a car without ACC (accessory) position on the ignition key switch**

Be sure to press (OFF) on the unit for two seconds to turn off the clock display after turning off the engine.
When you press (OFF) momentarily, the clock display does not turn off and this causes battery wear.

Getting Started

Resetting the unit

Before operating the unit for the first time or after replacing the car battery, you must reset the unit.
Remove the front panel and press the reset button with a pointed object, such as a ballpoint pen.

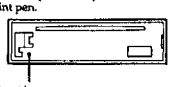

Reset button

Notes
- *Pressing the reset button will erase the clock setting and some memorised functions.*
- *When you connect the power supply cord to the unit or reset the unit, wait for about 10 seconds before you insert a disc. If you insert a disc within these 10 seconds, the unit will not be reset, and you will have to press the reset button again.*

Detaching the front panel

You can detach the front panel of this unit to protect the unit from being stolen.

1 Press (OFF).

2 Press (RELEASE), then slide the front panel a little to the left, and pull it off towards you.

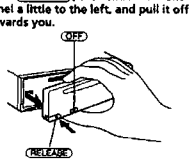

Notes
- *Be sure not to drop the panel when detaching it from the unit.*
- *If you detach the panel while the unit is still turned on, the power will turn off automatically to prevent the speakers from being damaged.*
- *When carrying the front panel with you, use the supplied front panel case.*

Attaching the front panel

Attach part ⓐ of the front panel to part ⓑ of the unit as illustrated and push until it clicks.

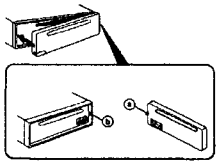

Notes
- *Be sure not to attach the front panel upside down.*
- *Do not press the front panel too hard against the unit when attaching it.*
- *Do not press too hard or put excessive pressure on the display window of the front panel.*
- *Do not expose the front panel to direct sunlight or heat sources such as hot air ducts, and do not leave it in a humid place. Never leave it on the dashboard of a car parked in direct sunlight or where there may be a considerable rise in temperature.*

Caution alarm

If you turn the ignition key switch to the OFF position without removing the front panel, the caution alarm will beep for a few seconds.

Setting the clock

The clock uses a 24-hour digital indication.

Example: To set the clock to 10:08

1 Press (SHIFT), then press ② (SET UP) repeatedly until "CLOCK" appears.

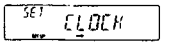

❶ Press ④ (→).

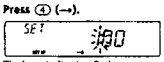

The hour indication flashes.

❷ Set the hour.

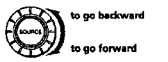

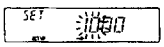

❸ Press ④ (→).

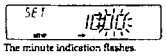

The minute indication flashes.

❹ Set the minute.

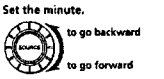

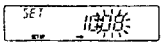

2 Press (SHIFT).

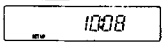

The clock starts.

3 Press (SHIFT).
After the clock setting is complete, the display returns to normal playback mode.

CD Player

Listening to a CD

Insert a CD.
Playback starts automatically.

If a CD is already inserted, press (SOURCE) repeatedly until "CD" appears to start playback.

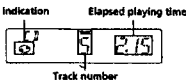

Note
To play an 8 cm CD, use the optional Sony compact disc single adapter (CSA-8).

To	Press
Stop playback	≜ or (OFF)
Eject the CD	≜

Changing the display item

Each time you press (DSPL) during CD playback, the item changes as follows:

Track number/Elapsed playing time ←→ Clock

After you select the desired item, the display will automatically change to the Motion Display mode after a few seconds.
In the Motion Display mode, all the above items are scrolled in the display one by one in order.

Tip
The Motion Display mode can be turned off. (See "Changing the sound and display settings" on page 18).

Locating a specific track
— Automatic Music Sensor (AMS)

During playback, push the SEEK/AMS control up or down and release for each track you want to skip.

Locating a specific point in a track
— Manual Search

During playback, push the SEEK/AMS control up or down and hold. Release when you have found the desired point.

Note
If "L L L L" or "7 7 7 7" appears in the display, that means you have reached the beginning or the end of the disc and you cannot go any further.

www.manualscenter.com

Playing a CD in various modes

You can play CDs in various modes:
- REP (Repeat Play) repeats the current track.
- SHUF (Shuffle Play) plays all the tracks in random order.

Playing tracks repeatedly
— Repeat Play

1 During playback, press (SHIFT).
Every time you press (SHIFT), only the items you can select light up.

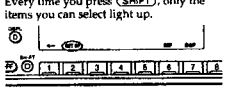

2 Press (6) (REP) repeatedly until "REP-1" appears.

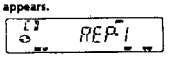

Repeat Play starts.

3 Press (SHIFT).

To return to normal playback mode, select "REP-OFF" in step 2 above.

Playing tracks in random order
— Shuffle Play

1 During playback, press (SHIFT).

2 Press (7) (SHUF) repeatedly until "SHUF-1" appears.

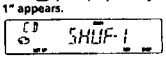

Shuffle Play starts.

3 Press (SHIFT).

To return to normal playback mode, select "SHUF-OFF" in step 2 above.

Radio

Memorising stations automatically
— Best Tuning Memory (BTM)

The unit selects the stations with the strongest signals and memorises them in the order of their frequencies. You can store up to 10 stations on each band (FM1, FM2, MW, and LW).

Caution
When tuning in stations while driving, use Best Tuning Memory to prevent accidents.

1 Press (SOURCE) repeatedly to select the tuner.
Each time you press (SOURCE), the source changes as follows:

→ TUNER → CD →

2 Press (MODE) repeatedly to select the band.
Each time you press (MODE), the band changes as follows:

→ FM1 → FM2 → MW → LW →

3 Press (SHIFT), then press (3) (PLAY MODE) repeatedly until "B.T.M" appears.

4 Press (4) (→).
The unit stores stations in the order of their frequencies on the number buttons.
A beep sounds when the setting is stored.

5 Press (SHIFT).

Notes
- *The unit does not store stations with weak signals. If only a few stations can be received, some number buttons will retain their former setting.*
- *When a number is indicated in the display, the unit starts storing stations from the one currently displayed.*
- *If a CD is not in the unit, only the tuner band appears even if you press (SOURCE).*

Memorising only the desired stations

You can preset up to 20 FM stations (10 each for FM1 and 2), up to 10 MW stations, and up to 10 LW stations in the order of your choice.

1 Press (SOURCE) repeatedly to select the tuner.

2 Press (MODE) repeatedly to select the band.

3 Push the SEEK/AMS control up or down to tune in the station that you want to store on the number-button.

4 Press and hold the desired number button ((1) to (10)) until "MEM" appears.
The number button indication appears in the display.

Note
If you try to store another station on the same number button, the previously stored station will be erased.

Receiving the memorised stations

1 Press (SOURCE) repeatedly to select the tuner.

2 Press (MODE) repeatedly to select the band.

3 Press the number button ((1) to (10)) on which the desired station is stored.

If you cannot tune in a preset station

Push and release the SEEK/AMS control up or down to search for the station (automatic tuning).
Scanning stops when the unit receives a station. Push the SEEK/AMS control up or down repeatedly until the desired station is received.

Note
If the automatic tuning stops too frequently, press (SHIFT), then press (3) (PLAY MODE) repeatedly until "LOCAL" (local seek mode) is displayed. Then press (4) (→) to select "LOCAL-ON." Press (SHIFT). Only the stations with relatively strong signals will be tuned in.

Tip
If you know the frequency of the station you want to listen to, push the SEEK/AMS control up or down and hold until the desired frequency appears (manual tuning).

If FM stereo reception is poor
— Monaural Mode

1 During radio reception, press (SHIFT), then press (3) (PLAY MODE) repeatedly until "MONO" appears.

2 Press (4) (→) repeatedly until "MONO-ON" appears.
The sound improves, but becomes monaural ("ST" disappears).

3 Press (SHIFT).

To return to normal playback mode, select "MONO-OFF" in step 2 above.

Changing the display item
Each time you press (DSPL), the item changes as follows:

Frequency ↔ Clock

After you select the desired item, the display will automatically change to the Motion Display mode after a few seconds.
In the Motion Display mode, all the above items are scrolled in the display one by one in order.

Tip
The Motion Display mode can be turned off. (See "Changing the sound and display settings" on page 18).

RDS

Overview of the RDS function

Radio Data System (RDS) is a broadcasting service that allows FM stations to send additional digital information along with the regular radio programme signal. Your car stereo offers you a variety of services. Here are just a few: retuning the same programme automatically, listening to traffic announcements, and locating a station by programme type.

Notes
- *Depending on the country or region, not all of the RDS functions are available.*
- *RDS may not work properly if the signal strength is weak or if the station you are tuned to is not transmitting RDS data.*

Displaying the station name

The name of the current station lights up in the display.

Select an FM station (page 8).
When you tune in an FM station that transmits RDS data, the station name appears in the display.

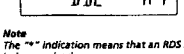

Note
The "" indication means that an RDS station is being received.*

Changing the displayed item
Each time you press (DSPL), the item changes as follows:

Frequency (Station Name) ↔ Clock

After you select the desired item, the display will automatically change to the Motion Display mode after a few seconds.
In the Motion Display mode, all the above items are scrolled in the display one by one in order.

Tip
The Motion Display mode can be turned off. (See "Changing the sound and display settings" on page 18).

Note
"NO NAME" appears if the received station does not transmit RDS data.

Retuning the same programme automatically
— Alternative Frequencies (AF)

The Alternative Frequencies (AF) function automatically selects and retunes the station with the strongest signal in a network. By using this function, you can continuously listen to the same programme during a long-distance drive without having to retune the station manually.

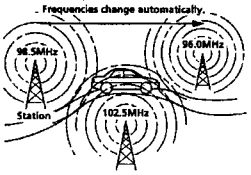

1 Select an FM station (page 8).

2 Press (AF/TA) repeatedly until "AF-ON" appears.
The unit starts searching for an alternative station with a stronger signal in the same network.

Note
When there is no alternative station in the area and you do not need to search for an alternative station, turn the AF function off by pressing (AF/TA) repeatedly until "AF TA-OFF" appears.

Changing the displayed item
Each time you press (AF/TA), the item changes as follows:

→ TA-ON → AF TA-ON* → AF TA-OFF → AF-ON →

* Select this to turn on both the AF and TA functions.

Notes
- *When "NO AF" and the station name flash alternately, it means that the unit cannot find an alternative station in the network.*
- *If the station name starts flashing after selecting a station with the AF function on, this indicates that no alternative frequency is available. Push the SEEK/AMS control up or down while the station name is flashing (within eight seconds). The unit starts searching for another frequency with the same PI (Programme Identification) data ("PI SEEK" appears and no sound is heard). If the unit cannot find another frequency, "NO PI" appears, and the unit returns to the previously selected frequency.*

continue to next page →

www.manualscenter.com

Listening to a regional programme

The "REG-ON" (regional on) function lets you stay tuned to a regional programme without being switched to another regional station. (Note that you must turn the AF function on.) The unit is factory preset to "REG-ON," but if you want to turn off the function, do the following.

1 During radio reception, press (SHIFT), then press (3) (PLAY MODE) repeatedly until "REG" appears.

2 Press (4) (→) repeatedly until "REG-OFF" appears.

3 Press (SHIFT).
Note that selecting "REG-OFF" might cause the unit to switch to another regional station within the same network.

To return to regional on, select "REG-ON" in step 2 above.

Note
This function does not work in the United Kingdom and in some other areas.

Local link function (United Kingdom only)

The Local Link function lets you select other local stations in the area, even if they are not stored on your number buttons.

1 Press a number button that has a local station stored on it.

2 Within five seconds, press the number button of the local station again.

3 Repeat this procedure until the desired local station is received.

Listening to traffic announcements

The Traffic Announcement (TA) and Traffic Programme (TP) data let you automatically tune in an FM station that is broadcasting traffic announcements even if you are listening to other programme sources.

Press (AF/TA) repeatedly until "TA-ON" or "AF TA-ON" appears.
The unit starts searching for traffic information stations. "TP" appears in the display when the unit finds a station broadcasting traffic announcements.
When the traffic announcement starts, "TA" flashes. The flashing stops when the traffic announcement is over.

Tip
If the traffic announcement starts while you are listening to another programme source, the unit automatically switches to the announcement and goes back to the original source when the announcement is over.

Notes
- *"NO TP" flashes for five seconds if the received station does not broadcast traffic announcements. Then, the unit starts searching for a station that broadcasts it.*
- *When "EON" appears with "TP" in the display, the current station makes use of broadcast traffic announcement of other stations in the same network.*

To cancel the current traffic announcement

Press (AF/TA) or (SOURCE).
To cancel all traffic announcements, turn off the function by pressing (AF/TA) until "AF TA-OFF" appears.

Presetting the volume of traffic announcements

You can preset the volume level of the traffic announcements beforehand so you won't miss the announcement. When a traffic announcement starts, the volume will be automatically adjusted to the preset level.

1 Select the desired volume level.

2 Press (AF/TA) for two seconds.
"TA" appears and the setting is stored.

Receiving emergency announcements

If an emergency announcement comes in while you are listening to the radio, the programme will be automatically switched to it. If you are listening to a source other than the radio, the emergency announcements will be heard if you set AF or TA to on. The unit will then automatically switch to these announcements no matter which source you are listening to at the time.

Presetting the RDS stations with the AF and TA data

When you preset RDS stations, the unit stores each station's data as well as its frequency, so you don't have to turn on the AF or TA function every time you tune in the preset station. You can select a different setting (AF, TA, or both) for individual preset stations, or the same setting for all preset stations.

Presetting the same setting for all preset stations

1 Select an FM band (page 8).

2 Press (AF/TA) repeatedly to select either "AF-ON", "TA-ON" or "AF TA-ON" (for both AF and TA functions).
Note that selecting "AF TA-OFF" stores not only RDS stations, but also non-RDS stations.

3 Press (SHIFT), then press (3) (PLAY MODE) repeatedly until "BTM" appears.

4 Press (4) (→) until "B.T.M" flashes.

5 Press (SHIFT).

Presetting different settings for each preset station

1 Select an FM band, and tune in the desired station (page 9).

2 Press (AF/TA) repeatedly to select either "AF-ON", "TA-ON" or "AF TA-ON" (for both AF and TA functions).

3 Press the desired number button until "MEM" appears.
Repeat from step 1 to preset other stations.

Tip
If you want to change the preset AF and/or TA setting after you tune in the preset station, you can do so by turning the AF or TA function on or off.

Locating a station by programme type

You can locate the station you want by selecting one of the programme types shown below.

Programme types	Display
News	NEWS
Current Affairs	AFFAIRS
Information	INFO
Sports	SPORT
Education	EDUCATE
Drama	DRAMA
Culture	CULTURE
Science	SCIENCE
Varied	VARIED
Popular Music	POP M
Rock Music	ROCK M
Easy Listening	EASY M
Light Classical	LIGHT M
Classical	CLASSICS
Other Music Type	OTHER M
Weather	WEATHER
Finance	FINANCE
Children's programmes	CHILDREN
Social Affairs	SOCIAL A
Religion	RELIGION
Phone In	PHONE IN
Travel	TRAVEL
Leisure	LEISURE
Jazz Music	JAZZ
Country Music	COUNTRY
National Music	NATION M
Oldies Music	OLDIES
Folk Music	FOLK M
Documentary	DOCUMENT
Not specified	NONE

Note
You cannot use this function in some countries where no PTY (Programme Type selection) data is available.

1 Press (PTY) during FM reception until "PTY" appears.

PTY INFO

The current programme type name appears if the station is transmitting the PTY data. "- - - - -" appears if the received station is not an RDS station, or if the RDS data has not been received.

2 Press (PTY) repeatedly until the desired programme type appears.
The programme types appear in the order shown in the above table. Note that you cannot select "NONE" (Not specified) for searching.

PTY SPORT

3 Push the SEEK/AMS control up or down.
The unit starts searching for a station broadcasting the selected programme type. When the unit finds the programme, the programme type appears again for five seconds.
"NO" and the programme type appear alternately for five seconds if the unit cannot find the programme type. It then returns to the previous selected station.

Setting the clock automatically

The CT (Clock Time) data from the RDS transmission sets the clock automatically.

1 During radio reception, press (SHIFT), then press (2) (SET UP) repeatedly until "CT" appears.

SET CT-OFF

2 Press (4) (→) repeatedly until "CT-ON" appears.
The clock is set.

SET CT-ON

3 Press (SHIFT) to return to the normal display.

To cancel the CT function

Select "CT-OFF" in step 2 above.

Notes
- *The CT function may not work even though an RDS station is being received.*
- *There might be a difference between the time set by the CT function and the actual time.*

Other Functions

You can also control this unit with an optional rotary commander.

Labelling the rotary commander

Depending on how you mount the rotary commander, attach the appropriate label as shown in the illustration below.

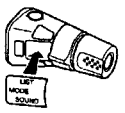

www.manualscenter.com

Using the rotary commander

The rotary commander works by pressing buttons and/or rotating controls.

By pressing buttons (the SOURCE and MODE buttons)

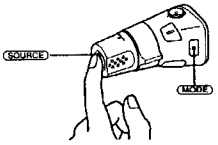

Each time you press (SOURCE), the source changes as follows:

TUNER ⟷ CD

Pressing (MODE) changes the operation in the following ways;

• Tuner: FM1 → FM2 → MW → LW

By rotating the control (the SEEK/AMS control)

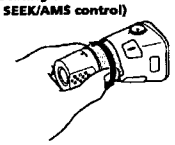

Rotate the control momentarily and release it to:

• Locate a specific track on a disc. Rotate and hold the control until you locate the specific point in a track, then release it to start playback.

• Tune in stations automatically. Rotate and hold the control to find a specific station.

By pushing in and rotating the control (the PRESET/DISC control)

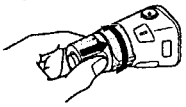

Push in and rotate the control to:

• Receive the stations memorised on the number buttons.

Other operations

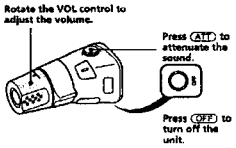

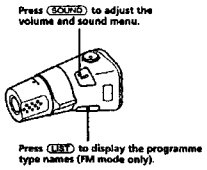

Changing the operative direction

The operative direction of controls is factory-set as shown below.

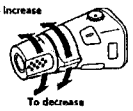

If you need to mount the rotary commander on the right hand side of the steering column, you can reverse the operative direction.

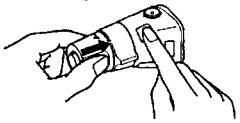

Press (SOUND) for two seconds while pushing the VOL control.

Tip
You can also change the operative direction of these controls with the unit (page 18).

Adjusting the sound characteristics

You can adjust the bass, treble, balance, and fader.
You can store the bass and treble levels independently for each source.

1 Select the item you want to adjust by pressing (SOUND) repeatedly.

VOL (volume) → BAS (bass) → TRE (treble) → BAL (left-right) → FAD (front-rear)

2 Adjust the selected item by rotating the dial.

Adjust within three seconds after selecting the item. (After three seconds, the dial function reverts to volume control.)

Attenuating the sound

Press (ATT) on the optional rotary commander.
"ATT-ON" flashes momentarily.

To restore the previous volume level, press (ATT) again.

Tip
When the interface cable of a car telephone is connected to the ATT lead, the unit decreases the volume automatically when a telephone call comes in (Telephone ATT function).

Changing the sound and display settings

The following items can be set:

• CLOCK (page 6).
• CT (Clock Time) (page 15).
• D.INFO (Dual Information) - to display the clock and the play mode at the same time (ON) or to display the information alternately (OFF).
• BEEP - to turn on or off the beeps.
• RM (Rotary Commander) - to change the operative direction of the controls of the rotary commander.
  — Select "NORM" to use the rotary commander as the factory-set position.
  — Select "REV" when you mount the rotary commander on the right side of the steering column.
• M.DSPL (Motion Display) - to turn the motion display on or off.

1 Press (SHIFT).

2 Press (2) (SET UP) repeatedly until the desired item appears.

Each time you press (2) (SET UP), the item changes as follows:

CLOCK → CT → D.INFO* → BEEP → RM → M.DSPL

* *When no CD or MD is playing, this item will not appear.*

Note
The displayed item will differ depending on the source.

3 Press (4) (→) to select the desired setting (Example: ON or OFF).

4 Press (SHIFT).
After the mode setting is complete, the display returns to normal playback mode.

Boosting the bass sound

— D-bass

You can enjoy a clear and powerful bass sound. The D-bass function boosts the low frequency signal with a sharper curve than conventional bass boost.
You can hear the bass line more clearly even while the vocal volume remains the same. You can emphasize and adjust the bass sound easily with the D-BASS control.

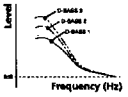

Adjusting the bass curve

Turn the D-BASS control to adjust the bass level (1, 2 or 3).
"D-BASS" appears in the display.

To cancel, turn the control to OFF.

Note
If the bass sound becomes distorted, adjust the D-BASS control or volume.

www.manualscenter.com

Connections

Cautions

- This unit is designed for negative earth 12 V DC operation only.
- Be careful not to pinch any wires between a screw and the body of the car or this unit or between any moving parts such as the seat railing, etc.
- Connect the power connecting cord ⑥ to the unit and speakers before connecting it to the auxiliary power connector.
- **Run all earth wires to a common earth point.**
- Connect the yellow cord to a free car circuit rated higher than the unit's fuse rating. If you connect this unit in combination with other stereo components, the car circuit they are connected to must be rated higher than the sum of the individual components' fuse rating. If there are no car circuits rated as high as the unit's fuse rating, connect the unit directly to the battery. If no car circuits are available for connecting this unit, connect the unit to a car circuit rated higher than the unit's fuse rating in such a way that if the unit blows its fuse, no other circuits will be cut off.

Notes of connection example

Notes on the control leads

- *The power aerial control lead (blue) supplies +12 V DC when you activate the AF (Alternative Frequency) or the TA (Traffic Announcement) function.*
- *When your car has a built-in FM/MW/LW aerial in the rearside glass, it is necessary to connect the power aerial control lead (blue) or the accessory power input lead (red) to the power terminal of the existing aerial booster. For details, consult your dealer.*
- *A power aerial without a relay box cannot be used with this unit.*

Warning

If you have a power aerial without a relay box, connecting this unit with the supplied power connecting cord ① may damage the aerial.

Memory hold connection

When the yellow power input lead is connected, power will always be supplied to the memory circuit even when the ignition switch is turned off.

Notes on speaker connection

- *Before connecting the speakers, turn the unit off.*
- *Use speakers with an impedance of 4 to 8 ohms, and with adequate power handling capacities. Otherwise, the speakers may be damaged.*
- *Do not connect the terminals of the speaker system to the car chassis, and do not connect the terminals of the right speaker with those of the left speaker.*
- *Do not attempt to connect the speakers in parallel.*
- *Do not connect any active speakers (with built-in amplifiers) to the speaker terminals of the unit. Doing so may damage the active speakers. Be sure to connect passive speakers to these terminals.*

Warning when installing in a car without ACC (accessory) position on the ignition key switch

Be sure to press (OFF) on the unit for two seconds to turn off the clock display after turning off the engine.

When you press (OFF) momentarily, the clock display does not turn off and this causes battery wear.

Conexiones

Precauciones

- Esta unidad ha sido diseñada para alimentarse con 12 V CC, negativo a masa, solamente.
- Tenga cuidado de no atrapar ningún cable entre algún tornillo y la carrocería del automóvil o esta unidad o entre las partes móviles, como por ejemplo los raíles del asiento, etc.
- Conecte el cable de conexión de alimentación ⑥ a la unidad y los altavoces antes de conectarlo al conector de alimentación auxiliar.
- **Conecte todos los conductores de puesta a masa a un punto común.**
- Conecte el cable amarillo a un circuito libre del automóvil de potencia nominal superior a la del fusible de la unidad. Si conecta esta unidad en combinación con otros componentes estéreo, la potencia nominal del circuito del automóvil a los que dichos componentes estén conectados debe ser superior a la suma de la potencia nominal del fusible de los componentes. Si no existen circuitos de automóvil de potencia nominal tan alta como la del fusible de la unidad, conecte ésta directamente a la batería. Si no hay circuitos de automóvil disponibles para conectar esta unidad, conecte la misma a un circuito de automóvil de potencia nominal superior a la del fusible de la unidad de forma que no se desactiven otros circuitos si el fusible de dicha unidad se funde.

Notas de ejemplo de conexiones

Notas sobre conductores de control

- *El conductor de control (azul) de la antena motorizada suministra +12 V CC al activar la función AF (frecuencias alternativas) o TA (anuncios de tráfico).*
- *Si el automóvil dispone de antena de FM/MW/LW incorporada en el cristal trasero/lateral, será necesario conectar el cable de control de antena motorizada (azul) o el cable de entrada de alimentación accesoria (rojo) al terminal de potencia del amplificador de antena existente. Para más información, consulte con el proveedor.*
- *Con esta unidad no podrá utilizarse una antena motorizada sin caja de relés.*

Advertencia

Si dispone de una antena motorizada sin dispositivo de relé, la conexión de esta unidad con el cable de conexión de alimentación ① suministrado puede dañar la antena.

Conexión para protección de la memoria

Si conecta el conductor de entrada amarillo, el circuito de la memoria recibirá siempre alimentación, incluso aunque ponga la llave de encendido en la posición de desactivación.

Notas sobre la conexión de los altavoces

- *Antes de conectar los altavoces, desconecte la alimentación de la unidad.*
- *Utilice altavoces con una impedancia de 4 a 8 ohmios, y con la potencia máxima admisible adecuada, ya que de lo contrario podría dañarlos.*
- *No conecte los terminales del sistema de altavoces al chasis del automóvil, ni los del altavoz izquierdo a los del derecho.*
- *No intente conectar los altavoces en paralelo.*
- *No conecte altavoces activos (con amplificadores incorporados) a los terminales de altavoces de la unidad. Si lo hiciese, podría dañar tales altavoces. Por lo tanto, cerciórese de conectar altavoces pasivos a estos terminales.*

Advertencia sobre la instalación en un automóvil que no disponga de posición ACC (accesorios) en el interruptor de la llave de encendido

Asegúrese de pulsar (OFF) en la unidad durante dos segundos para desactivar la indicación del reloj una vez apagado el motor.

Si pulsa (OFF) momentáneamente, la indicación del reloj no se desactivará y esto causará el desgaste de la batería.

Ligações

Cuidado

- Este aparelho foi concebido para funcionar somente com corrente contínua de 12 V com negativo à massa.
- Tenha cuidado para que os fios não fiquem entalados entre os parafusos e a carroçaria do automóvel ou a caixa do aparelho nem entre as peças móveis, por exemplo, as calhas dos bancos, etc.
- Ligue o cabo de alimentação de corrente ⑥ ao aparelho e aos alifalantes antes de o ligar ao conector de corrente auxiliar.
- **Ligue todos os cabos de massa num ponto de massa comum.**
- Ligue o cabo amarelo a um circuito eléctrico livre do automóvel, cuja potência nominal seja superior à dos fusíveis do aparelho. Se ligar este aparelho em série com outros componentes estéreo, a potência nominal do circuito eléctrico do automóvel onde os ligar tem de ser superior à soma das potências nominal dos fusíveis de todos os componentes individuais. Se não houver nenhum circuito eléctrico do automóvel com uma potência nominal tão elevada como a dos fusíveis do aparelho, ligue-o directamente à bateria. Se não estiver disponível nenhum circuito eléctrico do automóvel para ligação deste aparelho, ligue-o a um circuito eléctrico do automóvel com uma potência nominal superior à dos fusíveis do aparelho, de tal modo que, se o aparelho rebentar os fusíveis respectivos, nenhum outro circuito seja cortado.

Notas sobre o exemplo de ligação

Notas sobre os fios de controlo

- *O fio de controlo da antena eléctrica (azul) fornece +12 V CC quando activar as funções AF (frequência alternativa) ou TA (informações de trânsito).*
- *Se o seu automóvel tiver uma antena de FM/MW/LW montada no vidro traseiro/lateral, tem de ligar o fio de controlo da antena eléctrica (azul) ou o fio de entrada de alimentação para os acessórios (vermelho) ao terminal de alimentação do intensificador do sinal da antena existente.*
- *Não pode utilizar uma antena eléctrica sem caixa de relé com este aparelho.*

Atenção

Se a antena eléctrica não tiver uma caixa de relé, o facto de ligar este aparelho com a cabo de alimentação ① fornecido, pode provocar danos na antena.

Ligação para alimentação contínua da memória

Quando o fio amarelo de entrada de alimentação for ligado, os circuitos de memória ficarão com alimentação contínua, mesmo se a chave de ignição estiver desligada.

Notas sobre a ligação dos altifalantes

- *Antes de ligar os altifalantes, desligue o aparelho.*
- *Utilize altifalantes com impedância de 4 a 8 ohm, e com capacidade admissível de potência adequada. Caso contrário, os altifalantes poderão sofrer avarias.*
- *Não ligue os terminais do sistema de altifalantes ao chassis do automóvel, e não ligue os terminais do altifalante direito aos terminais do altifalante esquerdo.*
- *Não tente ligar os altifalantes em paralelo.*
- *Não ligue nenhum sistema de altifalantes activos (com amplificadores incorporados) aos terminais dos altifalantes do aparelho. Caso o faça, poderá avariar o sistema de altifalantes activos. Portanto, não se esqueça de ligar altifalantes passivos a estes terminais.*

Aviso sobre a instalação num automóvel sem posição ACC (acessórios) na chave de ignição

Verifique se carregou em (OFF) no aparelho durante dois segundos para desactivar o visor do relógio depois de ter desligado o motor.

Se carregar ligeiramente em (OFF), não desactiva o visor do relógio o que provoca o desgaste da bateria.

Anslutning

Säkerhetsföreskrifter

- Denna bilstereo är endast avsedd för anslutning till ett negativt jordat, 12 V bilbatteri.
- Var noga med att inga kablar kläms mellan någon skruv eller att de blir klämda mellan rörliga delar som t.ex. bilsätet.
- Anslut strömkabeln ⑥ till enheten och högtalarna innan du ansluter den till den yttre strömanslutning.
- **Dra samtliga jordledningar till en och samma jordningspunkt.**
- Anslut den gula kabeln till en ledig bilkrets med ett högre amperetal än enhetens. Om du seriekopplar enheten till andra stereokomponenter måste den bilkrets de kopplas till ha ett högre amperetal än summan av de enskilda delarnas amperevärde. Om det inte finns några bilkretsar med en så hög amperetal som enhetens ska du ansluta enheten direkt till batteriet. Om inga bilkretsar finns för anslutning till enheten ska du ansluta enheten till en bilkrets med ett högre amperetal än enhetens, så att inga andra kretsar stängs av om enhetens säkring brinner av.

Att observera angående anslutningsexemplen

Att observera angående de olika styrkablarna

- *Motorantennens styrkabel (blå) leder + 12 volts likström när mottagning av alternativa frekvenser AF eller mottagning av trafikmeddelanden TA aktiveras.*
- *Om bilen har en FM/LW/MW-antenn som är inbyggd i sido- eller bakrutan, måste du ansluta motorantennens styrkabel (blå) eller tillbehörsströmkabeln (röd) till strömterminalen på antennförstärkaren. Din återförsäljare kan ge dig mer information.*
- *En motorantenn utan styrrelädosa kan inte anslutas till denna bilstereo.*

Varning

Om du har en motorantenn utan relädosa kan antennen skadas om du ansluter enheten med den medföljande strömkabeln ①.

Anslutning för minnesstöd

När du anslutit den gula, ingående strömkabeln försörjs minneskretsen med ström hela tiden, även när tändlåset slås från.

Att observera angående högtalarnas anslutning

- *Slå av bilstereon innan du ansluter högtalarna.*
- *Anslut endast högtalare med en impedans mellan 4 och 8 ohm och med tillräcklig effekthanteringskapacitet för att skydda högtalarna mot skador.*
- *Anslut inte något av högtaleruttagen till bilens chassi. Anslut inte heller uttagen på höger högtalare till uttagen på vänster högtalare.*
- *Anslut inte högtalarna parallelt.*
- *Anslut inte aktiva högtalare (med inbyggda slutsteg) till bilstereons högtaluttag, eftersom de kan skada de aktiva högtalarna. Var noga med att bara ansluta passiva högtalare till dessa uttag.*

Var försiktig när du gör installationen i en bil där tändningslåset saknar tillbehörsläge (ACC)

Glöm inte att trycka på (OFF) på enheten under två sekunder för att stänga av klockans teckenfönster efter det att du har stängt av motorn.

Om du bara trycker på (OFF) ett kort ögonblick slocknar inte klockans teckenfönster vilket kan leda till att batteriet laddas ur.

www.manualscenter.com

Connection example
Ejemplo de conexiones
Exemplo de ligações
Anslutningsexempel

*[*1] Note for the aerial connecting*
If your car aerial is an ISO (International Organization for Standardization) type, use the supplied adapter ⑦ to connect it. First connect the car aerial to the supplied adapter, then connect it to the aerial jack of the master unit.

*[*1] Nota sobre la conexión de la antena*
Si la antena del automóvil es del tipo ISO (International Organization for Standardization), emplee el adaptador suministrado ⑦ para conectarla.
En primer lugar, conecte la antena del automóvil al adaptador suministrado y, a continuación, a la toma de antena de la unidad principal.

*[*1] Nota referente à ligação da antena*
Se a antena do automóvel for uma antena de tipo ISO (International Organization for Standardization), utilize o adaptador fornecido ⑦ para fazer a ligação respectiva.
Ligue primeiro a antena do automóvel ao adaptador fornecido e depois à ficha tipo jack de antena do sistema principal.

*[*1] Angående antennanslutning*
Om motorantennen är av ISO-typ (International Organization for Standardization), använder du medföljande adapter ⑦ för att ansluta den.
Anslut först antennen till medföljande adapter och därefter till antennuttaget på huvudenheten.

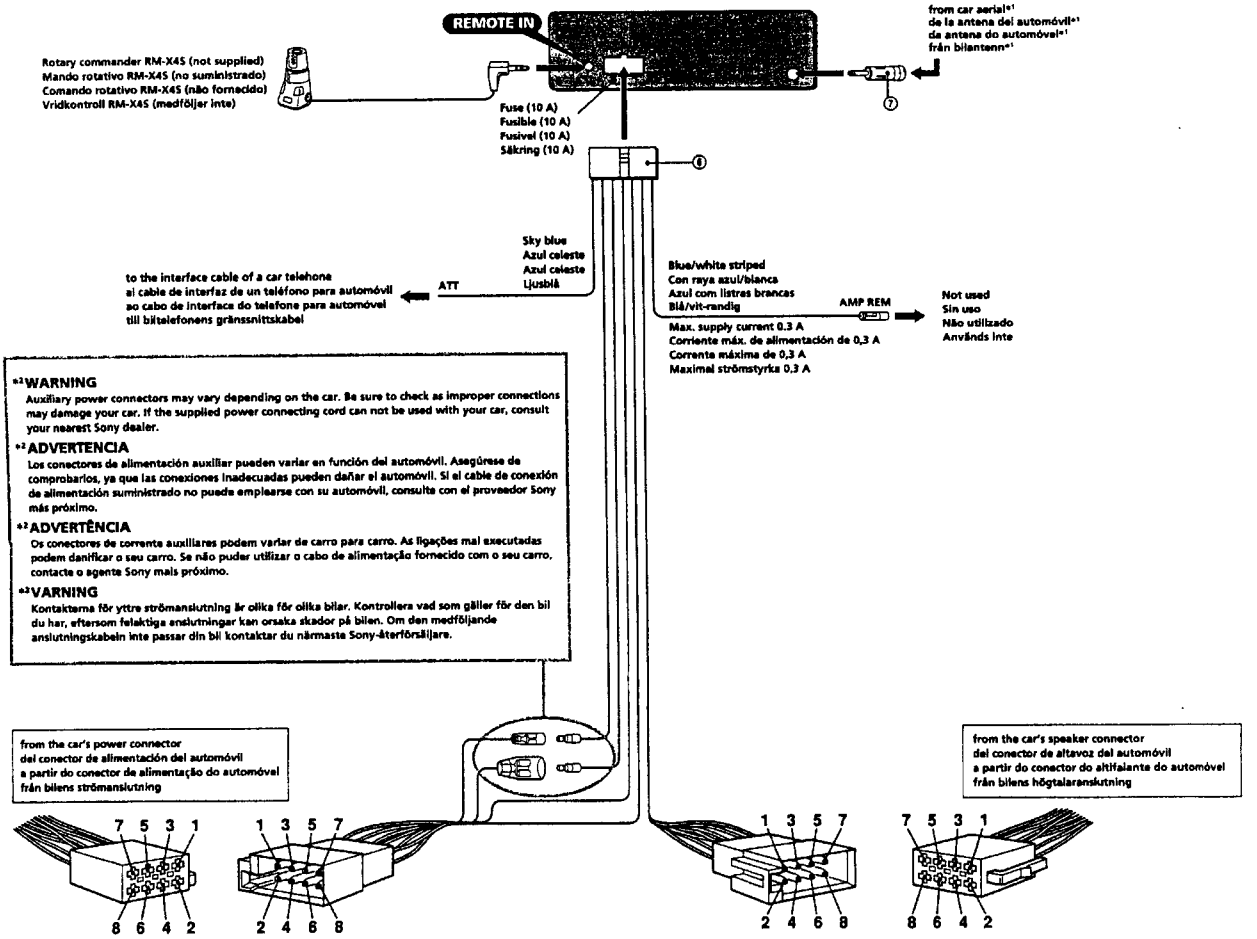

4*2	Yellow Amarillo Amarelo Gul	continuous power supply suministro de alimentación continua alimentação de corrente contínua kontinuerlig strömförsörjning	7*2	Red Rojo Vermelho Röd	switched power supply suministro conmutado de alimentación alimentação de corrente comutada switchad strömförsörjning
5	Blue Azul Azul Blå	power aerial control control de antena motorizada antena eléctrica ström till antennstyrning	8	Black Negro Preto Svart	earth toma de tierra Terra jord

Positions 1, 2, 3 and 6 do not have pins.
Las posiciones 1, 2, 3 y 6 no disponen de pines.
As posições 1, 2, 3 e 6 não têm pinos.
Positionerna 1, 2, 3 och 6 saknar stift.

1	Purple Púrpura Violeta Violett	+	Speaker, Rear, Right Altavoz, Parte posterior, Derecho Altifalante, Parte de trás, Direito Högtalare, Bakre, Höger	5	White Blanco Branco Vit	+	Speaker, Front, Left Altavoz, Parte frontal, Izquierdo Altifalante, Parte da frente, Esquerdo Högtalare, Främre, Vänster
2		–	Speaker, Rear, Right Altavoz, Parte posterior, Derecho Altifalante, Parte de trás, Direito Högtalare, Bakre, Höger	6		–	Speaker, Front, Left Altavoz, Parte frontal, Izquierdo Altifalante, Parte da frente, Esquerdo Högtalare, Främre, Vänster
3	Grey Gris Cinza Grå	+	Speaker, Front, Right Altavoz, Parte frontal, Derecho Altifalante, Parte da frente, Direito Högtalare, Främre, Höger	7	Green Verde Verde Grön	+	Speaker, Rear, Left Altavoz, Parte posterior, Izquierdo Altifalante, Parte de trás, Esquerdo Högtalare, Bakre, Vänster
4		–	Speaker, Front, Right Altavoz, Parte frontal, Derecho Altifalante, Parte da frente, Direito Högtalare, Främre, Höger	8		–	Speaker, Rear, Left Altavoz, Parte posterior, Izquierdo Altifalante, Parte de trás, Esquerdo Högtalare, Bakre, Vänster

Negative polarity positions 2, 4, 6, and 8 have striped cords.
Las posiciones de polaridad negativa 2, 4, 6 y 8 tienen cables con raya.
As posições 2, 4, 6 e 8 (polaridade negativa) têm cabos às riscas.
De negativa polpositionerna 2, 4, 6 och 8 har randiga kablar.

www.manualscenter.com

SECTION 2
DISASSEMBLY

Note : Follow the disassembly procedure in the numerical order given.

2-1. COVER

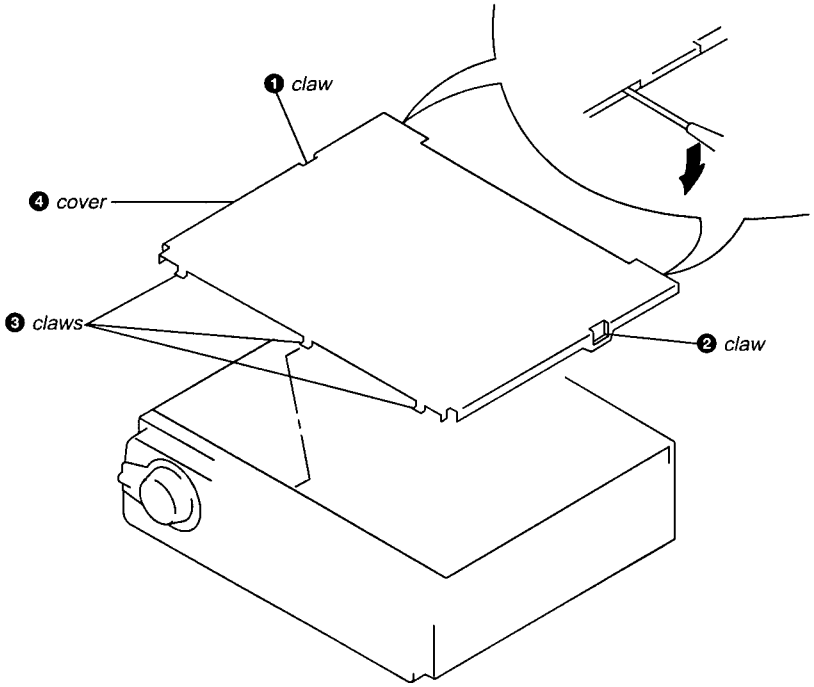

2-2. FRONT PANEL ASSY

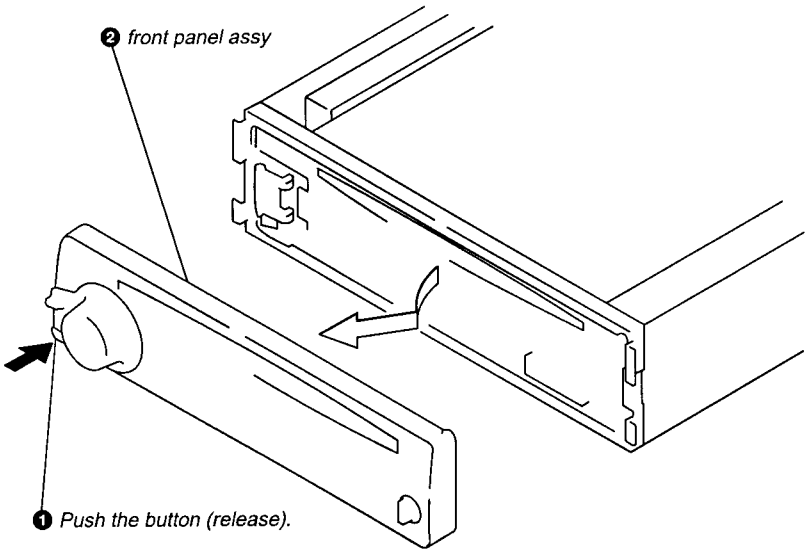

www.manualscenter.com

2-3. SUB PANEL (1) ASSY

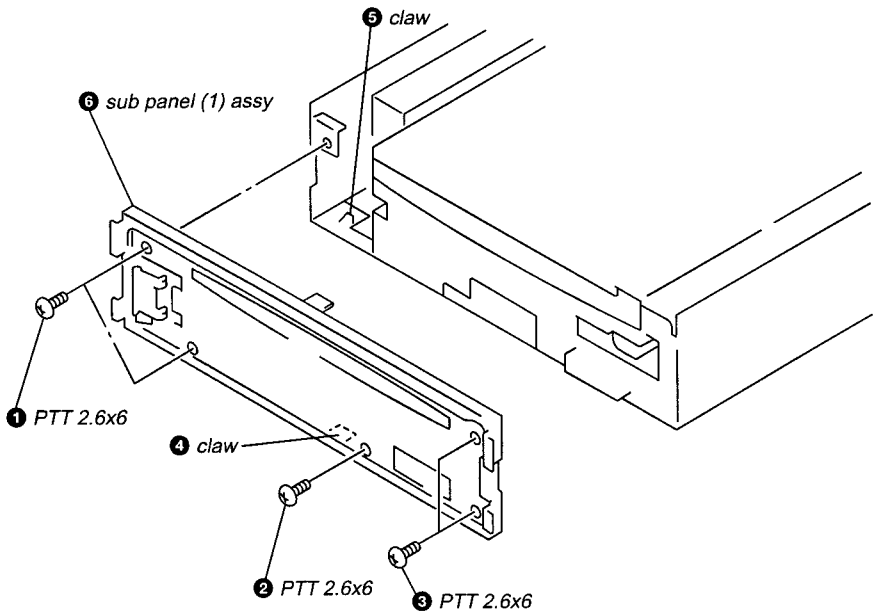

2-4. CD MECHANISM BLOCK

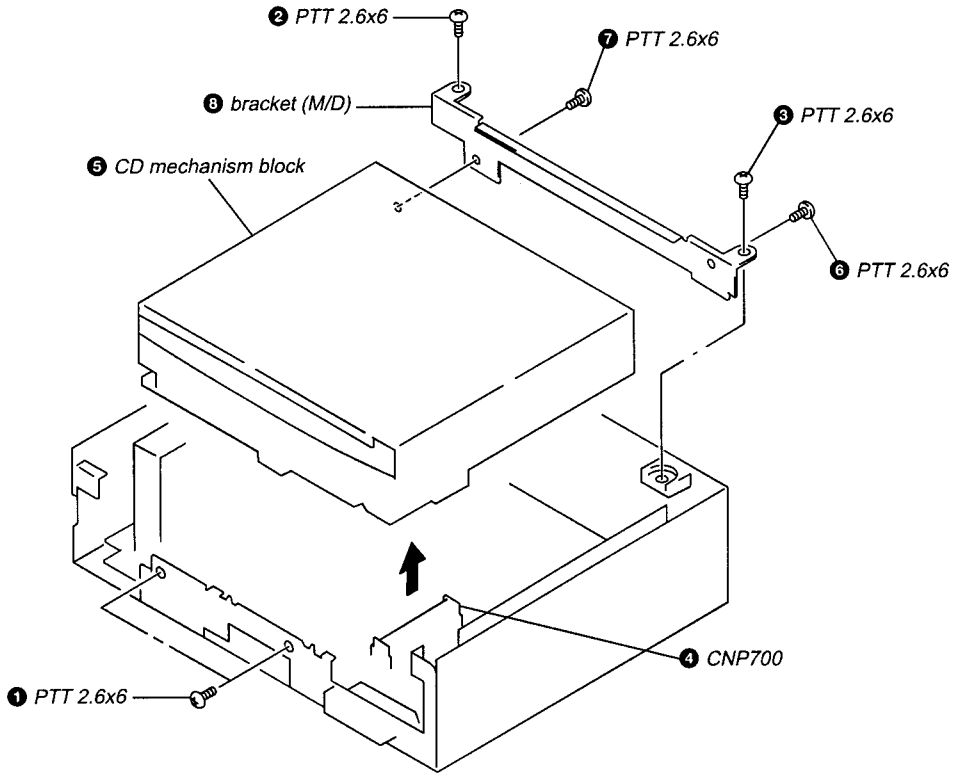

www.manualscenter.com

2-5. MAIN BOARD

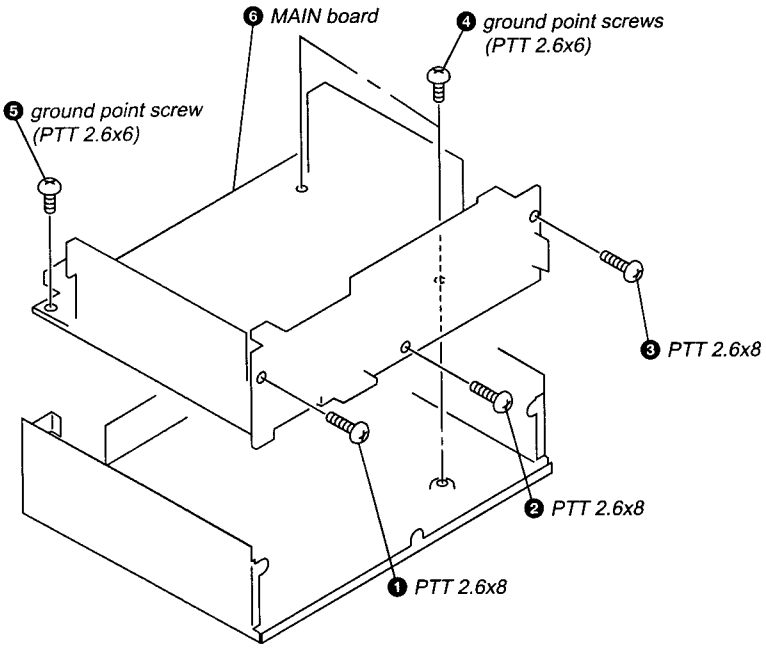

2-6. HEAT SINK

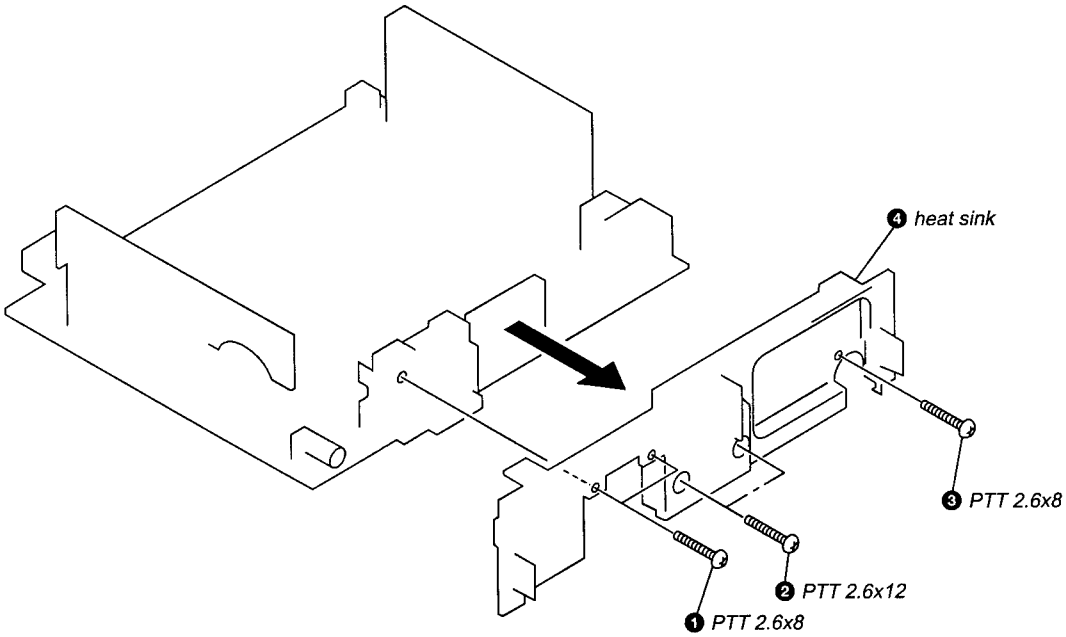

www.manualscenter.com

2-7. CHASSIS (T) SUB ASSY

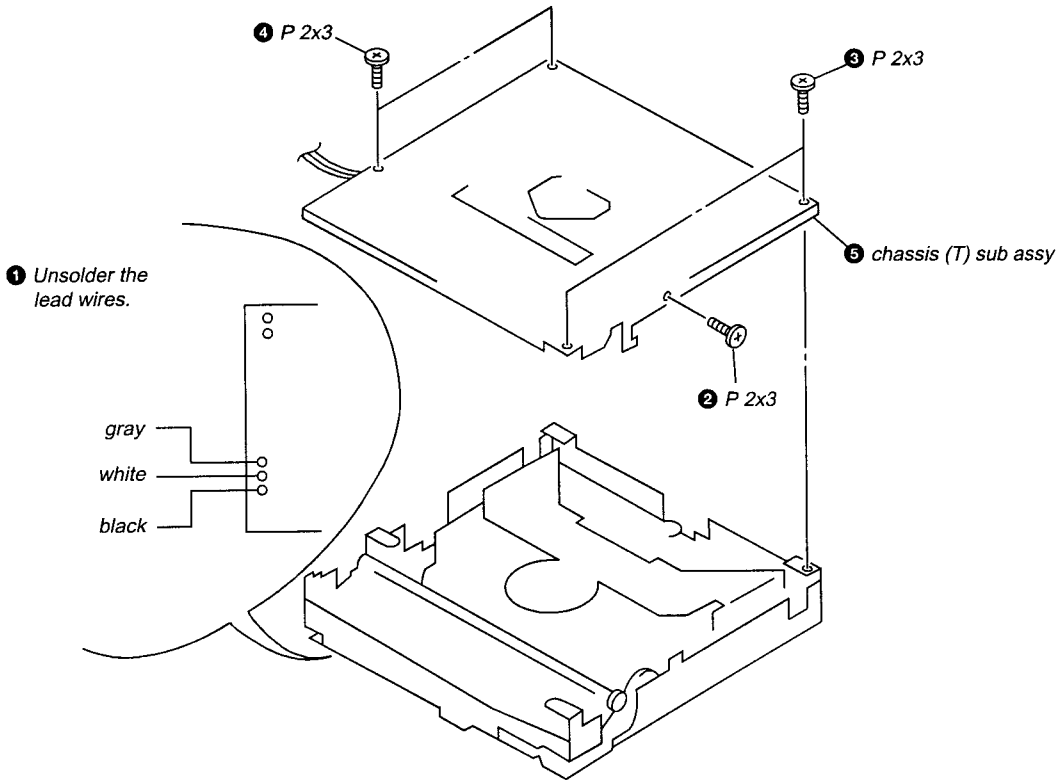

2-8. LEVER ASSY

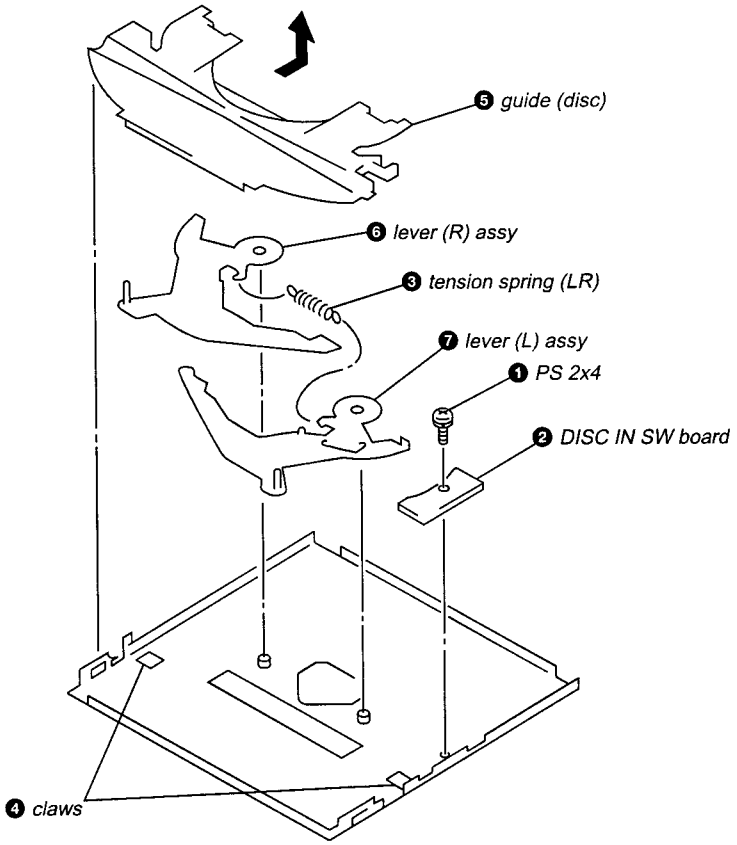

2-9. SERVO BOARD

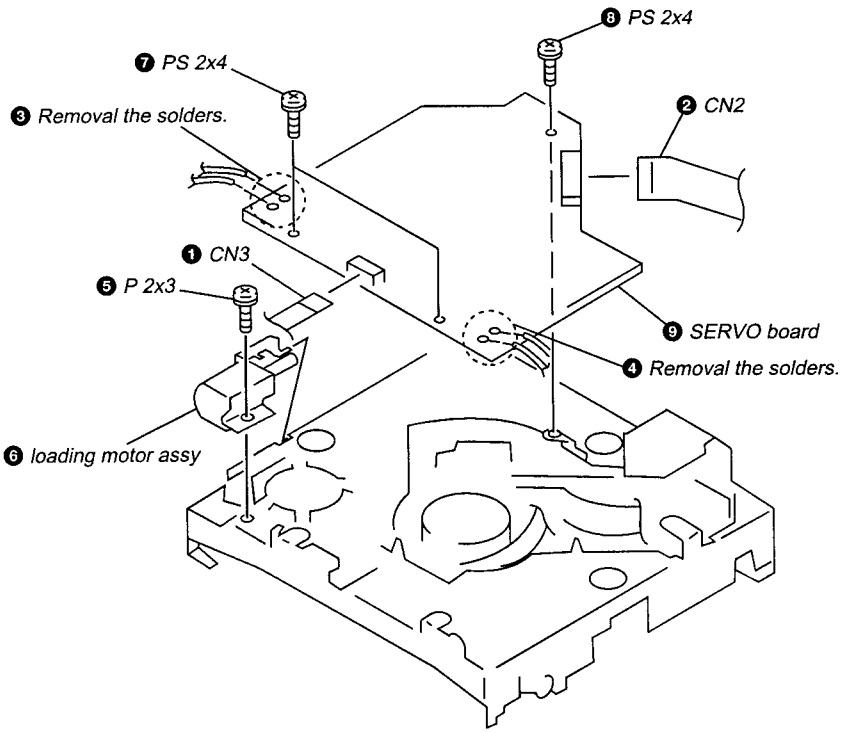

2-10. ROLLER ASSY

• When installing, take note of the positions arm (roller) and washers. (Fig. 1)

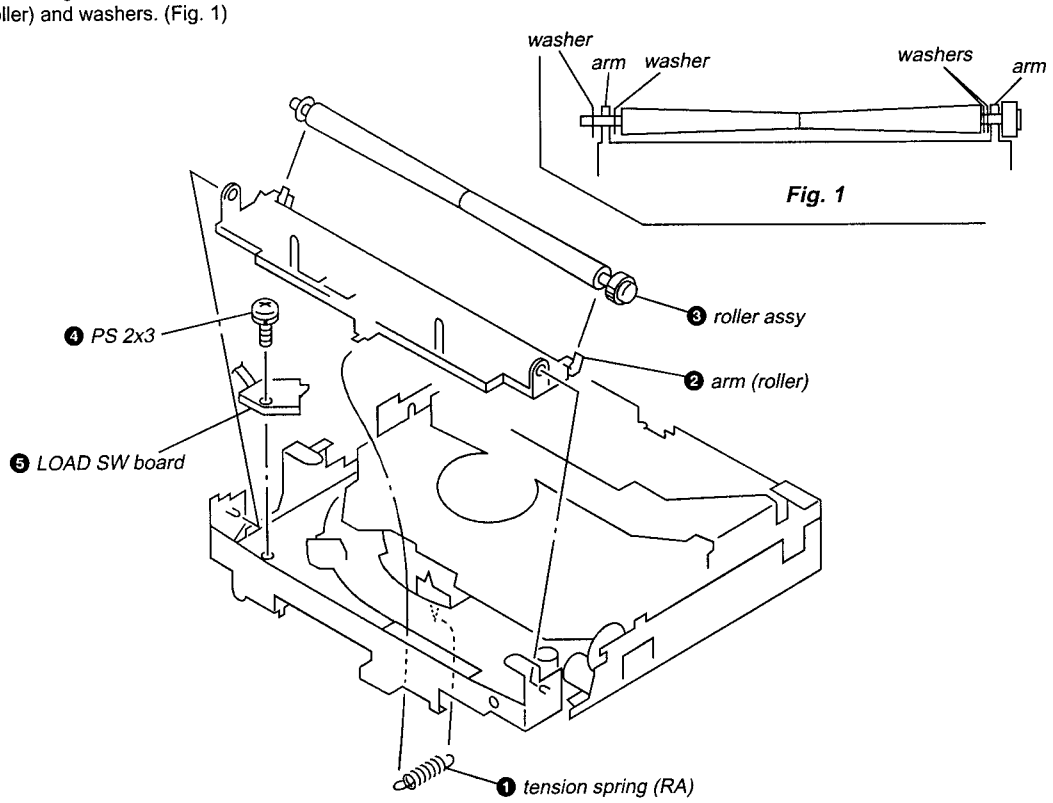

www.manualscenter.com

2-11. CHASSIS (OP) (O/S) ASSY

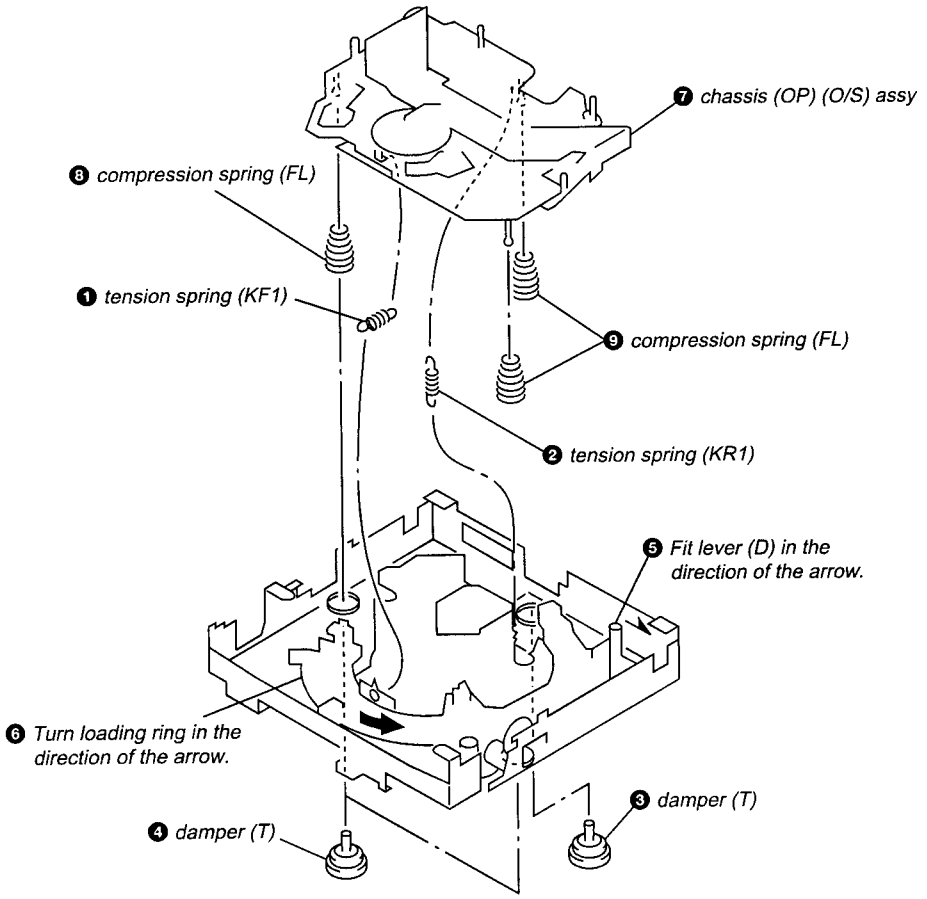

2-12. OPTICAL PICK-UP BLOCK

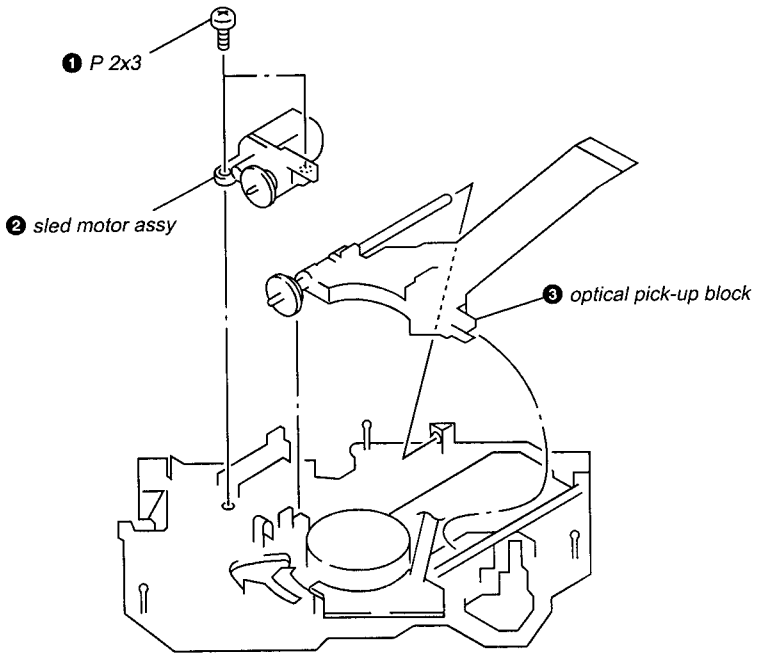

SECTION 3
ELECTRICAL ADJUSTMENTS

TUNER SECTION **0 dB = 1 μV**

Cautions during repair
When the tuner unit is defective, replace it by a new one because its internal block is difficult to repair.

TEST MODE

This set have the test mode function. In the test mode, FM Auto Scan/Stop Level and MW Auto Scan/Stop Level adjustments can be performed easier than it in ordinary procedure.

<Set the Test Mode>
1. Set the "OFF" mode.
2. Push the preset [4] button.
3. Push the preset [5] button.
4. Press the preset [1] button for more than two seconds.
5. Then the display indicates all lights, the test mode is set.

<Release the Test Mode>
1. Push the [OFF] button.

Note on Adjustment

The adjustments of tuner section, should be performed according to the following sequence.
1. FM Auto Scan/Stop Level Adjustment
2. FM Stereo Separation Adjustment
3. FM RDS S-Meter Adjustment
4. MW Auto Scan/Stop Level Adjustment

FM Auto Scan/Stop Level Adjustment

Setting :
D-BASS switch : OFF
SOURCE button : FM

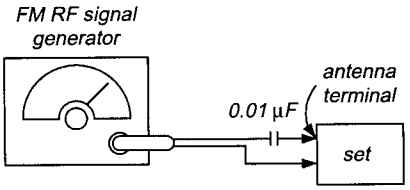

Carrier frequency : 98.00 MHz
Output level : 22 dB (12.6 μV)
Mode : mono
Modulation : 1 kHz, 22.5 kHz deviation (30%)

Procedure :
1. Set to the test mode.
2. Push the [SOURCE] button and set to FM.

Display

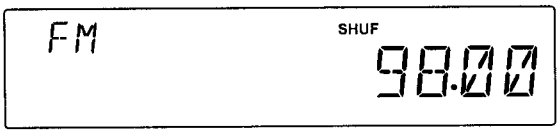

3. Push the preset [3] button.

Display

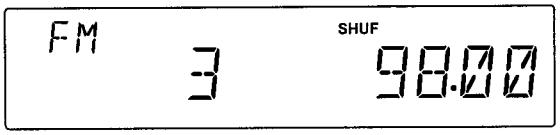

4. Adjust with the volume RV2 on TU601 so that the "FM" indication turns to "FM0" indication on the display window. But, in case of already indicated "FM0", turn the RV2 so that put out light "0" indication and adjustment.

Display

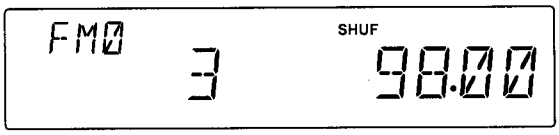

Adjustment Location : See page 18.

www.manualscenter.com

FM Stereo Separation Adjustment

Setting :

D-BASS switch : OFF
SOURCE button : FM

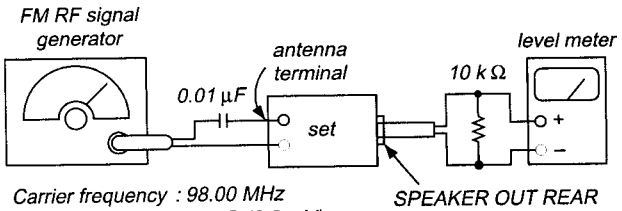

Carrier frequency : 98.00 MHz
Output level : 70 dB (3.2 mV)
Mode : stereo
Modulation : main : 1 kHz, 20 kHz deviation (26.7%)
sub : 1 kHz, 20 kHz deviation (26.7%)
19 kHz pilot : 7.5 kHz deviation (10%)

Procedure :

FM stereo signal generator output channel	Level meter connection	Level meter reading (dB)
L-CH	L-CH	Ⓐ
R-CH	L-CH	Ⓑ Adjust RV4 on TU601 for nimum reading.
R-CH	R-CH	Ⓒ
L-CH	R-CH	Ⓓ Adjust RV4 on TU601 for minimum reading.

L-CH stereo separation : Ⓐ – Ⓑ
R-CH stereo separation : Ⓒ – Ⓓ
The separations of both channels should be equal.

Specification : Separation more than 28 dB

Adjustment Location : See page 18.

FM RDS S-Meter Adjustment

Setting :

D-BASS switch : OFF
SOURCE button : FM

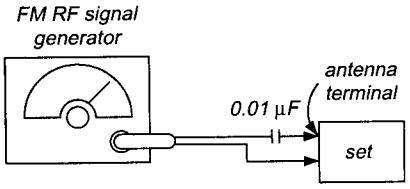

Carrier frequency : 98.00 MHz
Output level : 35 dB (56.2 µV)
Mode : mono
Modulation : no modulation

Procedure :

1. Set to the test mode. (See page 16.)
2. Push the SOURCE button and set to FM.

Display

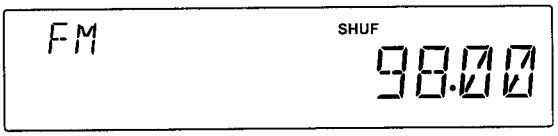

3. Push the preset 10 button.
4. Adjust RV801 so that the display indication is "16.0".

Display

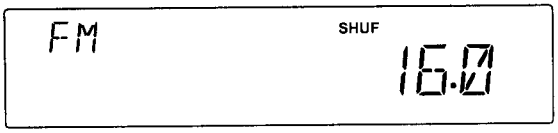

Specification : Display indication : 15.8 to 16.2

Adjustment Location : See page 18.

www.manualscenter.com

MW Auto Scan/Stop Level Adjustment

Setting :

D-BASS switch : OFF
SOURCE ⟶ MODE button : MW

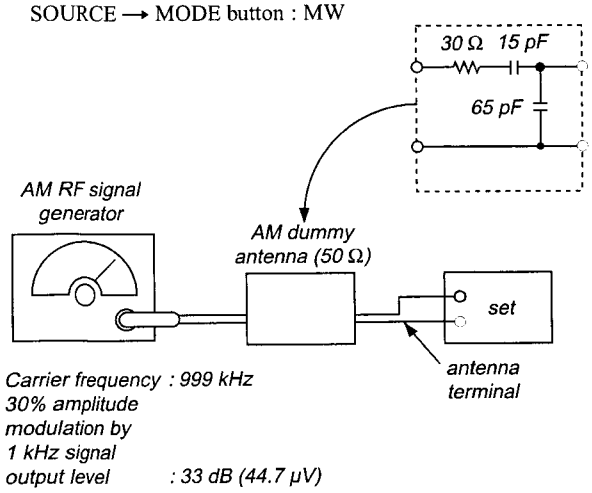

Procedure :

1. Set to the test mode. (See page 16.)
2. Push the SOURCE button.
3. Push the MODE button and set to MW.

Display

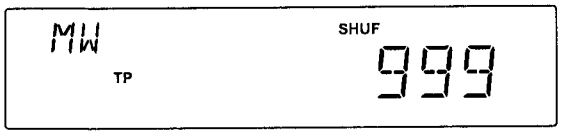

4. Push the preset 3 button.

Display

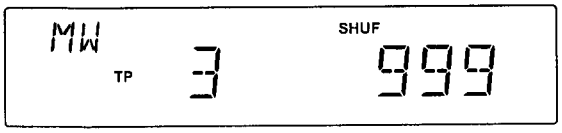

5. Adjust with the volume RV1 on TU601 so that the "MW" indication turns to "MW0" indication on the display window. But, in case of already indicated "MW0", turn the RV1 so that put out light "0" indication and adjustment.

Display

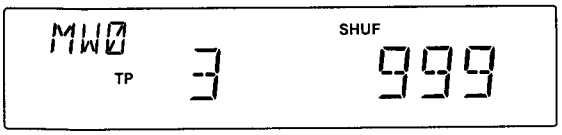

Adjustment Location : tuner unit (TU601)

Adjustment Location : tuner unit (TU601)

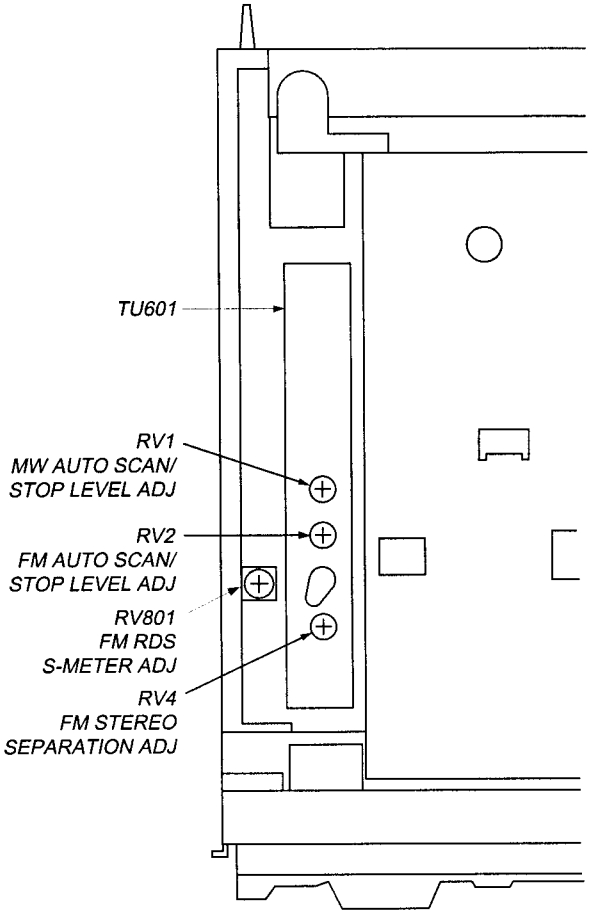

www.manualscenter.com

CD SECTION

Note:
1. CD Block basically constructed to operate without adjustment. Therefore, check each item in order given.
2. Use YEDS-18 disc (3-702-101-01) unless otherwise indicated.
3. Use the oscilloscope with more than 10 MΩ impedance.
4. Clean an objective lens by an applicator with neutral detergent when the signal level is low than specified value with the following checks.

Focus Bias Adjustment

Setting: This adjustment is performed with the set placed horizontally.

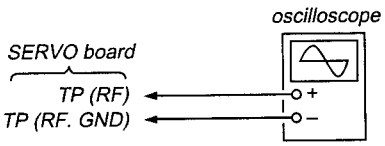

Procedure:
1. Connect an oscilloscope between TP (RF) and TP (RF. GND) on the SERVO board.
2. Connect the power supply.
3. Push the [RESET] button (S900) on the MAIN board.
4. Insert the disc (YEDS-18) and playback.
5. Adjust RV1 so that the oscilloscope waveform is clear and check RF signal level is correct or not.

Note: Clear RF signal waveform means that the sharp "◇" can be clearly distinguished at the center of the waveform.

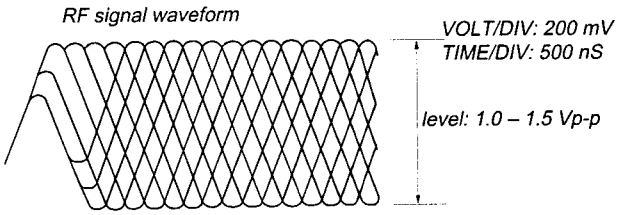

- When observing the eye pattern, set the oscilloscope to AC range and raise the vertical sensitivity so that it may be easily seen.

Adjustment Location: servo board

Focus Gain Adjustment (Coarse adjustment)

This adjustment is not required unless the following parts are replaced:
- Optical pick-up
- RV4

Procedure:
1. Set RV4 to the standard position. (mechanical center)
2. Check whether operation noise (while noise type) caused by the 2-axis device (lens section of the optical pick-up) is abnormally loud.
   If the operation noise is too loud, turn RV4 slightly counter-clockwise.

- If the gain is too low:
  Focus does not function and no music is selected.
- If the gain is too high:
  Noise caused by scratches and dust is heard and the operation becomes unstable.

Adjustment Location: servo board

Adjustment Location: servo board (component side)

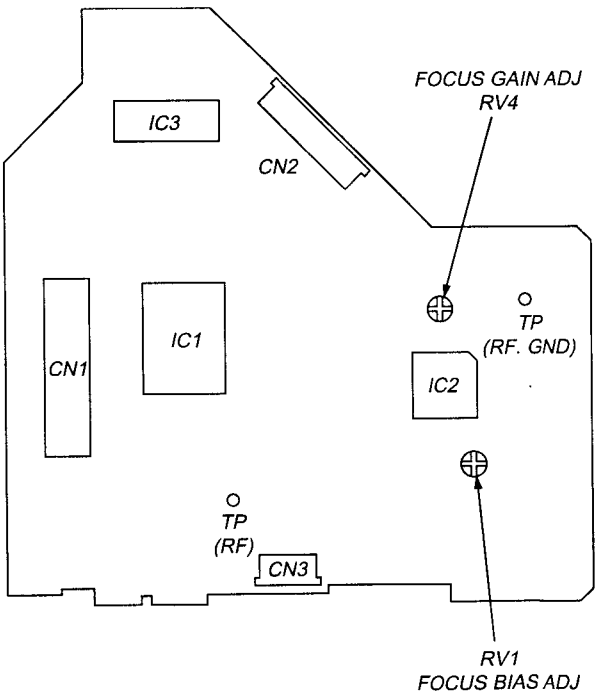

www.manualscenter.com

SECTION 4
DIAGRAMS

4-1. IC PIN DESCRIPTION

• IC801 MB90574APMT-G-238-BND (SYSTEM CONTROL)

Pin No.	Pin Name	I/O	Pin Description
1	$\overline{\text{LD ON}}$	O	Laser ON/OFF control output
2	FOK	I	Focus OK signal detection input
3	XLAT25	O	CD signal processing latch output
4	DATA25	O	CD signal serial data output
5	$\overline{\text{XRST}}$	O	Reset output to CD signal processor IC.
6	GFS	I	GFS signal detection input
7	NIL	—	Not used. (Connect to ground in this set.)
8	VCC	—	Power supply pin (+5 V)
9 – 11	NIL	—	Not used. (Open)
12	FLS SI/$\overline{\text{NOSEI}}$	I	Front panel attachment detection input
13	LCD SO/FLS SO	O	LCD serial data output
14	LCD CKO	O	LCD serial clock output
15	BEEP	O	BEEP output
16	NIL	—	Not used. (Open)
17	SQ SI	I	Sub Q data input
18	NIL	—	Not used. (Connect to ground in this set.)
19	SQ CKO	O	Sub Q read clock output
20	UNI SI	I	SONY BUS system serial interface input (Not used in this set.)
21	UNI SO	O	SONY BUS system serial interface output (Not used in this set.)
22	UNI CK	I/O	SONY BUS system serial clock input/output (Not used in this set.)
23	C IN	I	Track jump No. count input
24	SIRCS	I	Remote commander input
25	TXT SI	I	CD-TEXT data input (Not used in this set.)
26	NIL	—	Not used. (Connect to ground in this set.)
27	TXT CKO	O	CD-TEXT data read clock output (Not used in this set.)
28	CLOK25	O	CD signal processing serial clock output
29	$\overline{\text{SYSRST}}$	O	System reset output
30	DEEMPH	O	De-emphasis output
31	$\overline{\text{AMP ATT}}$	O	Power amplifier attenuator control output
32	MD ON	O	CD mechanism power control output
33	VSS	—	Ground
34	C	—	Power stabilization capacitor pin
35	CD ON	O	CD power control output
36	$\overline{\text{BUS ON}}$	O	BUS ON control output (Not used in this set.)
37	NIL	O	Power control output of A/D conversion.
38	DVCC	—	VREF input of D/A converter.
39	DVSS	—	Ground of D/A converter.
40	NIL	—	Not used. (Open)
41	ANGLE	O	LCD view angle alignment output (Not used in this set.)
42	AVCC	—	Analog power supply pin (+5 V)
43	AVRH	—	VREF + input of A/D converter.
44	AVRL	—	VREF – input of A/D converter.
45	AVSS	—	Analog ground
46 – 48	KEY IN0 – 2	I	Key input 0 – 2
49	RC IN0	I	Rotary commander input 0
50	QUALITY	I	Noise detection input
51	NIL	—	Not used. (Connect to ground in this set.)
52	MPDH	I	Tuner multi path input
53	S-METER	I	S-meter voltage detection input
54	VCC	—	Power supply pin (+5 V)
55	NS MASK	O	Noise detection output

www.manualscenter.com

Pin No.	Pin Name	I/O	Pin Description
56	AMP ON	O	Power amplifier power control output
57	TXT ON	O	Reset output to CD-TEXT decoder IC. (Not used in this set.)
58	$\overline{\text{VOL ATT}}$	O	Electric volume mute control output
59	NIL	—	Not used. (Open)
60	ATT	O	System attenuate control output
61	$\overline{\text{RC INI}}$	I	Rotary commander shift key input 1
62	TU ATT	O	Tuner attenuate output
63	VSS	—	Ground
64	NIL	—	Not used. (Open)
65	SSTOP	I	IF counter result signal detection input of PLL.
66	$\overline{\text{TEST}}$	I	Test mode initial setting detection input
67	DAVN	I	RDS IC data acquisition detection input
68	FM ON/$\overline{\text{AM ON}}$	O	FM ON output
69	TU ON	O	Tuner power control output
70	SDA	I/O	I²C BUS serial data input/output
71	SCL	O	I²C BUS serial clock output
72	$\overline{\text{NOSE2}}$	I	Front panel OPEN detection input
73	X1A	O	Sub ceramic oscillator output (32 kHz)
74	X0A	I	Sub ceramic oscillator input (32 kHz)
75	SCOR	I	SCOR signal detection input
76	BU IN	I	Backup power detection input
77	DQSY	I	CD-TEXT data setting completion signal detection input (Not used in this set.)
78	CD SENS	I	CD SENS signal detection input
79	NIL	I	Key input acknowledge
80	TEL ATT	I	Telephone attenuate detection input
81	ST/MONO	I/O	Tuner stereo signal detection input/forced monaural output
82	$\overline{\text{SEEKOUT}}$	O	SEEK output
83	SD IN	I	Signal detector input
84	WIDE	O	WIDE select output (Not used in this set.)
85	NARROW	O	NARROW select output (Not used in this set.)
86	HSTX	—	Hardware standby input (Connect to pin 90 ($\overline{\text{RESET}}$).)
87	MD2	—	Operation mode input (Connect to ground in this set.)
88, 89	MD1, 0	—	Operation mode input (Connect to VCC in this set.)
90	$\overline{\text{RESET}}$	I	Reset input
91	VSS	—	Ground
92	X0	I	Main ceramic oscillator input (3.68 MHz)
93	X1	O	Main ceramic oscillator output (3.68 MHz)
94	VCC	—	Power supply pin (+5 V)
95	COM8V ON	O	COM 8V control output
96	NIL	—	Not used. (Open)
97	AREA1	I	Destination select input 1 (Fixed at "H" in this set.)
98	AREA2	I	Destination select input 2 (Fixed at "H" in this set.)
99	LOUD	I	Fixed at "H" in this set.
100	BAND	I	Fixed at "H" in this set.
101	ACC IN	I	Accessory power detection input
102, 103	PH3, 2	I	Disc insertion detection photo sensor input (Fixed at "H" in this set.)
104	LCD CE	O	LCD chip enable output
105	$\overline{\text{FLS W}}$	I	Flash write input (Fixed at "H" in this set.)
106, 107	RE IN0, 1	I	Rotary encoder input
108	ILL ON	O	Illumination power control output
109	PW ON	O	System power control output

Pin No.	Pin Name	I/O	Pin Description
110	NIL	—	Not used. (Open)
111	ANT REM	O	ANT REMOTE power control output
112	NIL	—	Not used. (Open)
113	CTL2	—	Not used in this set.
114	CD LD	O	Loading motor control output (Loading direction)
115	CD EJ	O	Loading motor control output (Eject direction)
116	$\overline{\text{L SW}}$	I	Sled limit switch detection input
117	$\overline{\text{IN SW}}$/(PH1)	I	Disc insertion detection input
118	$\overline{\text{D SW}}$	I	DOWN switch detection input
119	VSS	—	Ground
120	$\overline{\text{SELF SW}}$/(IN SW)	I	Disc self store detection input

21

www.manualscenter.com

4-2. BLOCK DIAGRAM — CD SECTION —

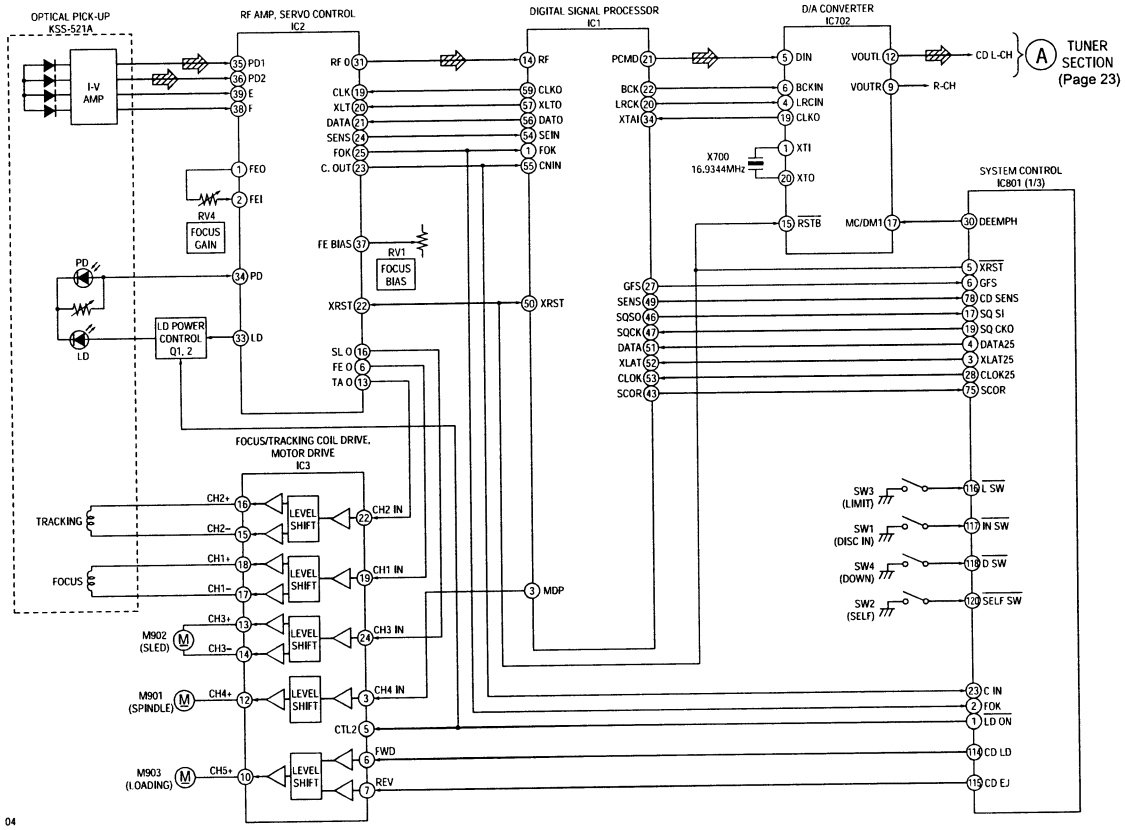

• Signal path
: CD

www.manualscenter.com

4-3. BLOCK DIAGRAM — TUNER SECTION —

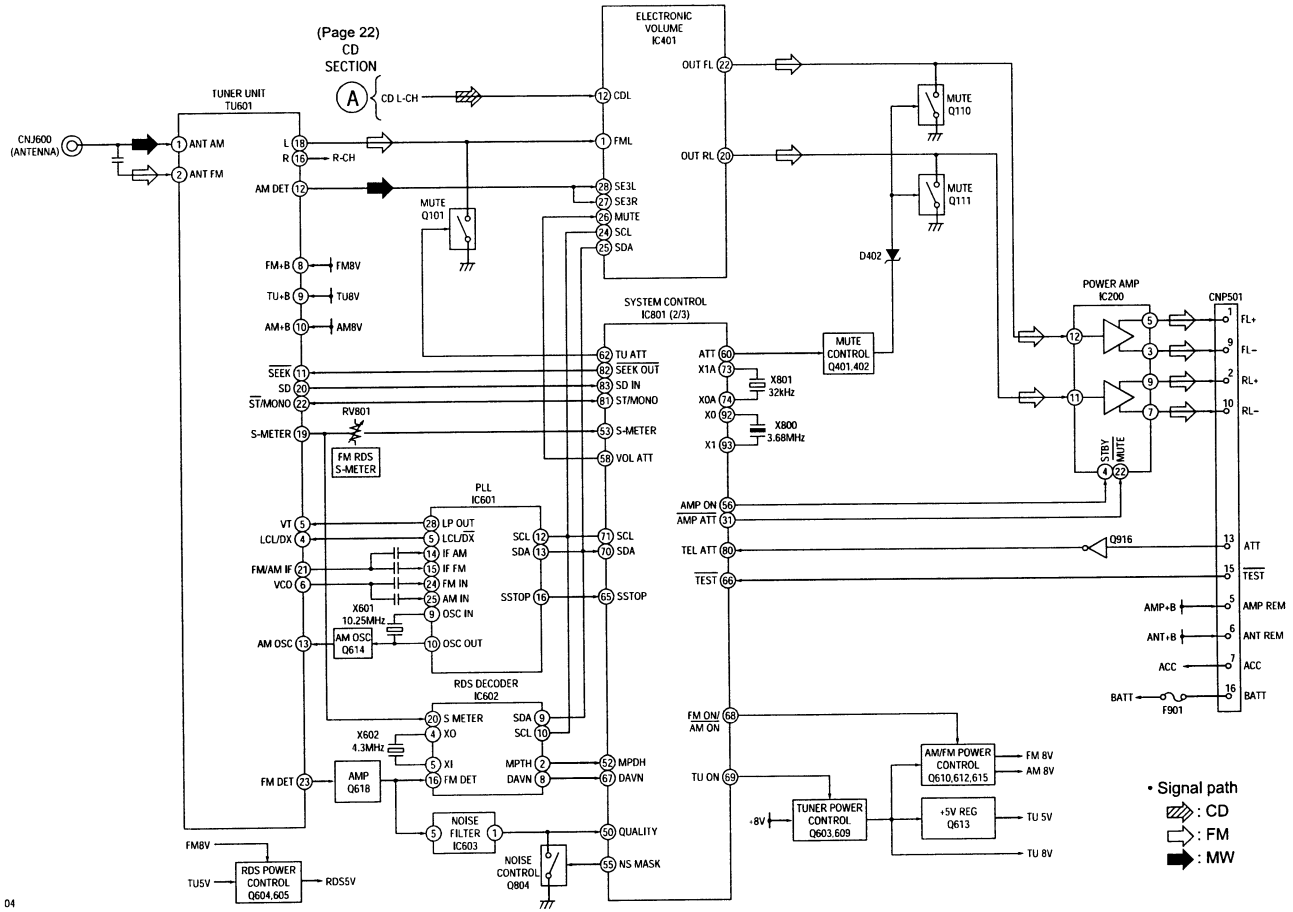

www.manualscenter.com

4-4. BLOCK DIAGRAM — DISPLAY SECTION —

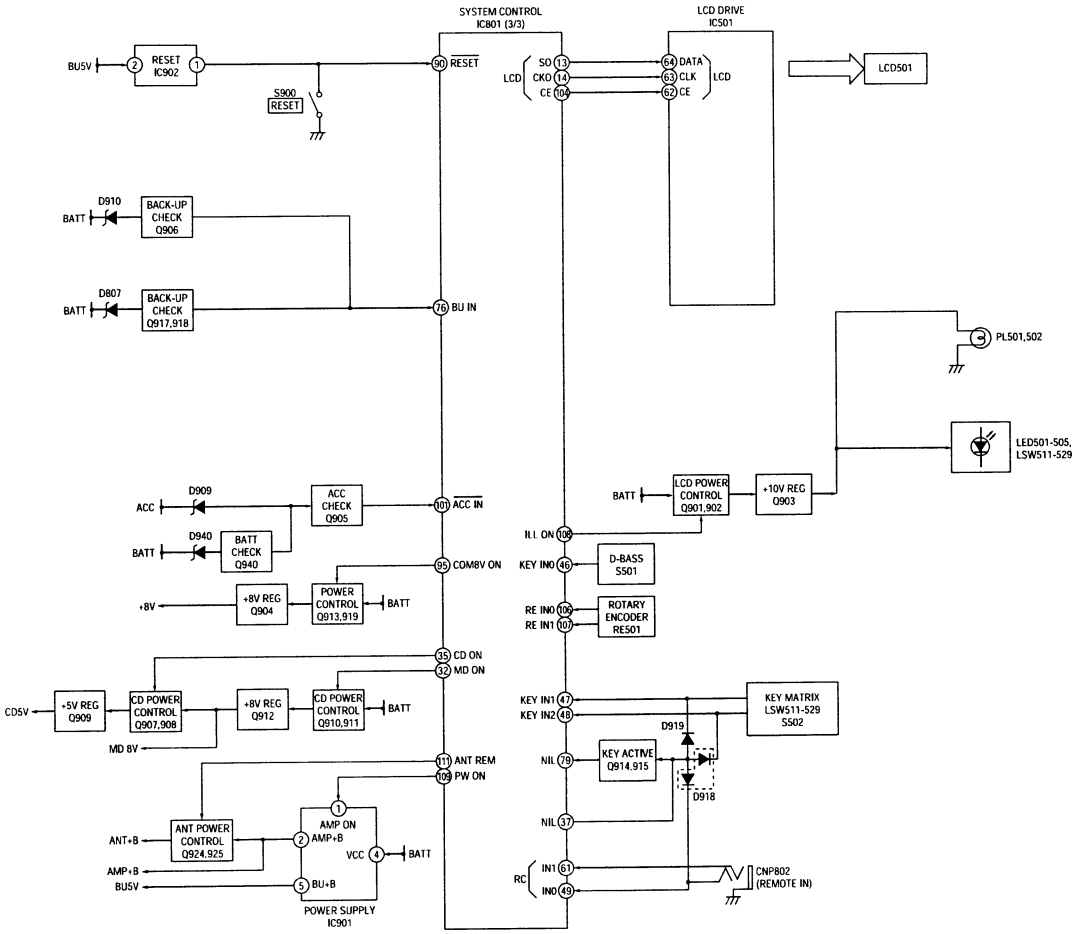

www.manualscenter.com

4-5. CIRCUIT BOARDS LOCATION

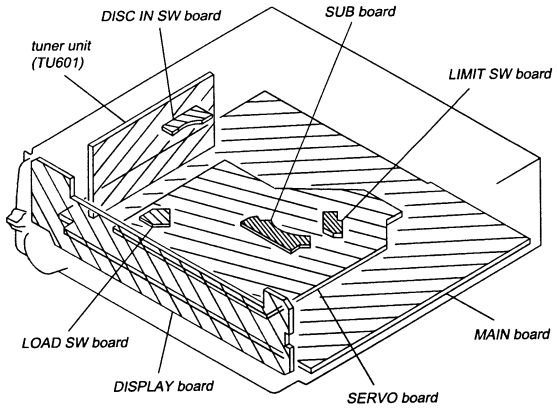

THIS NOTE IS COMMON FOR PRINTED WIRING BOARDS AND SCHEMATIC DIAGRAMS.
(In addition to this, the necessary note is printed in each block.)

for schematic diagram:
- All capacitors are in μF unless otherwise noted. pF: μμF 50 WV or less are not indicated except for electrolytics and tantalums.
- All resistors are in Ω and ¼ W or less unless otherwise specified.
- % : indicates tolerance.
- △ : internal component.
- ▭ : panel designation.

Note: The components identified by mark ⚠ or dotted line with mark ⚠ are critical for safety.
Replace only with part number specified.

- B+ : B+ Line.
- ▭ : adjustment for repair.
- Power voltage is dc 14.4V and fed with regulated dc power supply from ACC and BATT cords.
- Voltages are taken with a VOM (Input impedance 10 MΩ). Voltage variations may be noted due to normal production tolerances.
- Waveforms are taken with a oscilloscope. Voltage variations may be noted due to normal production tolerances.
- Circled numbers refer to waveforms.
- Signal path.
  - ⇨ : FM
  - ➡ : MW
  - ⇨ : CD

for printed wiring boards:
- o—— : parts extracted from the component side.
- —— : parts extracted from the conductor side.
- o : Through hole.
- ▒ : Pattern from the side which enables seeing. (The other layer's patterns are not indicated.)

Caution:	
Pattern face side: (Side B)	Parts on the pattern face side seen from the pattern face are indicated.
Parts face side: (Side A)	Parts on the parts face side seen from the parts face are indicated.

• Waveforms (MODE:PLAY)

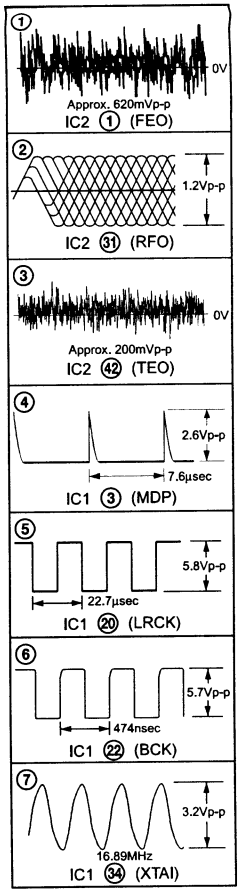

www.manualscenter.com

25

4-6. PRINTED WIRING BOARDS — CD MECHANISM SECTION —

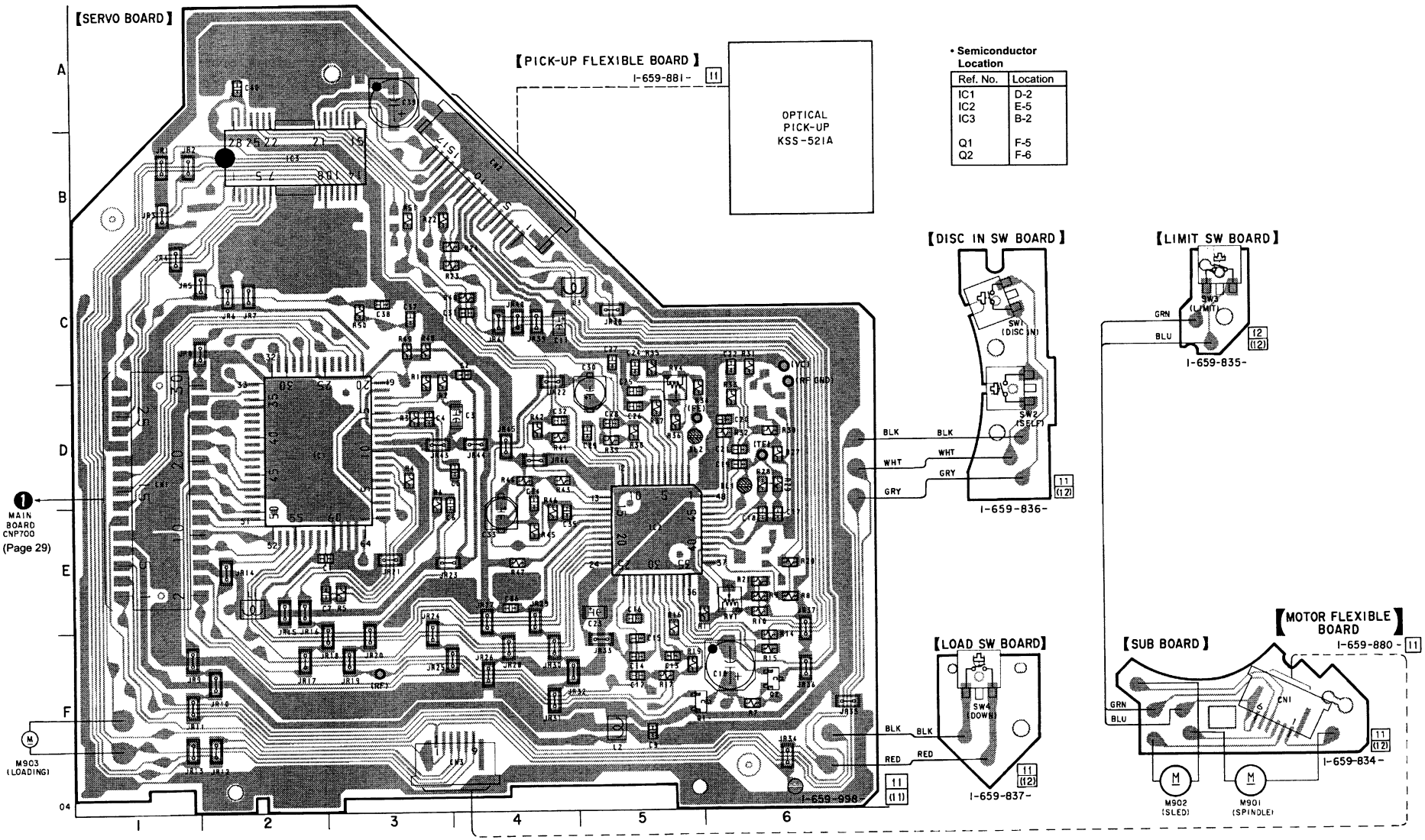

• Semiconductor Location

Ref. No.	Location
IC1	D-2
IC2	E-5
IC3	B-2
Q1	F-5
Q2	F-6

www.manualscenter.com

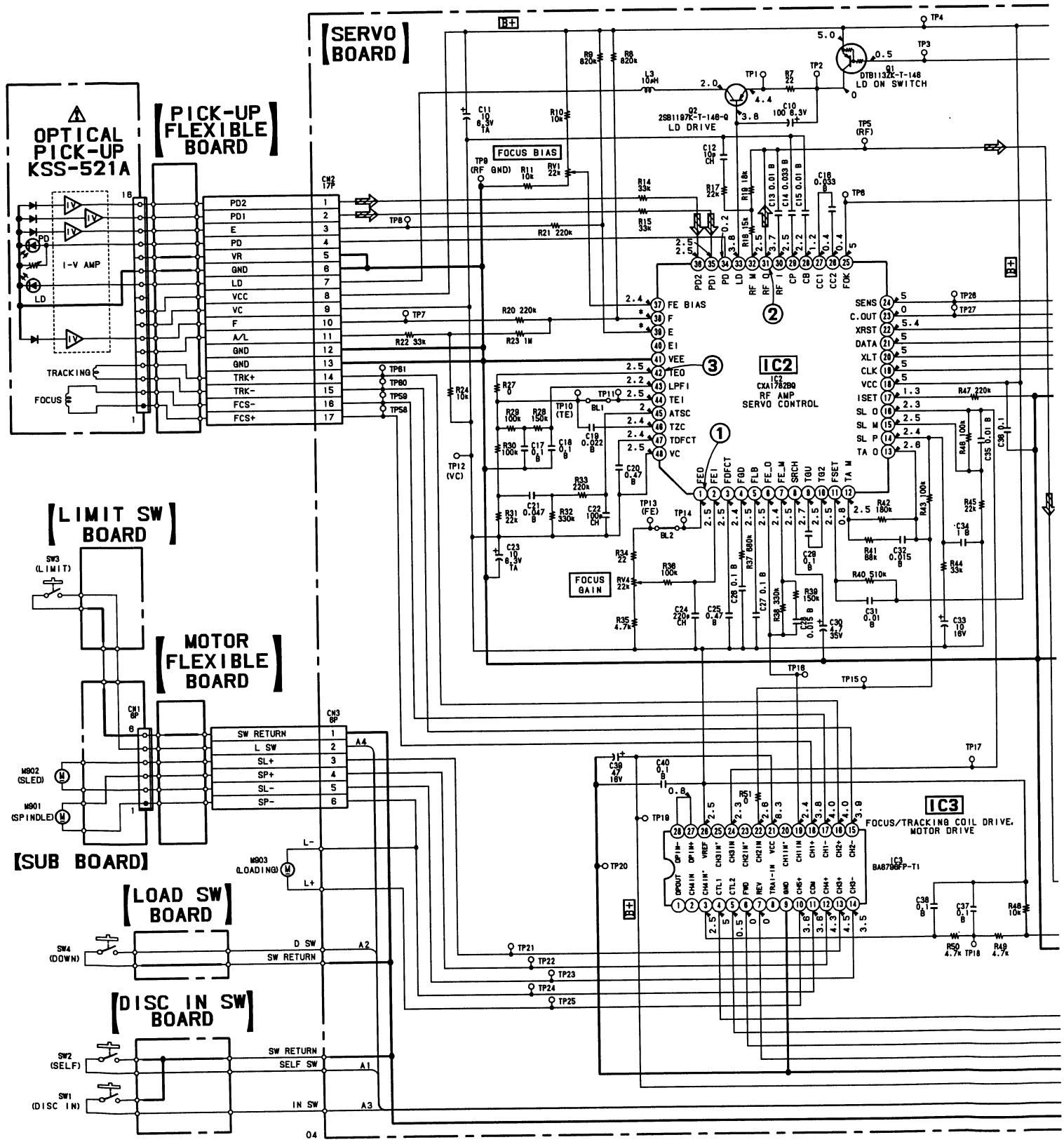

www.manualscenter.com

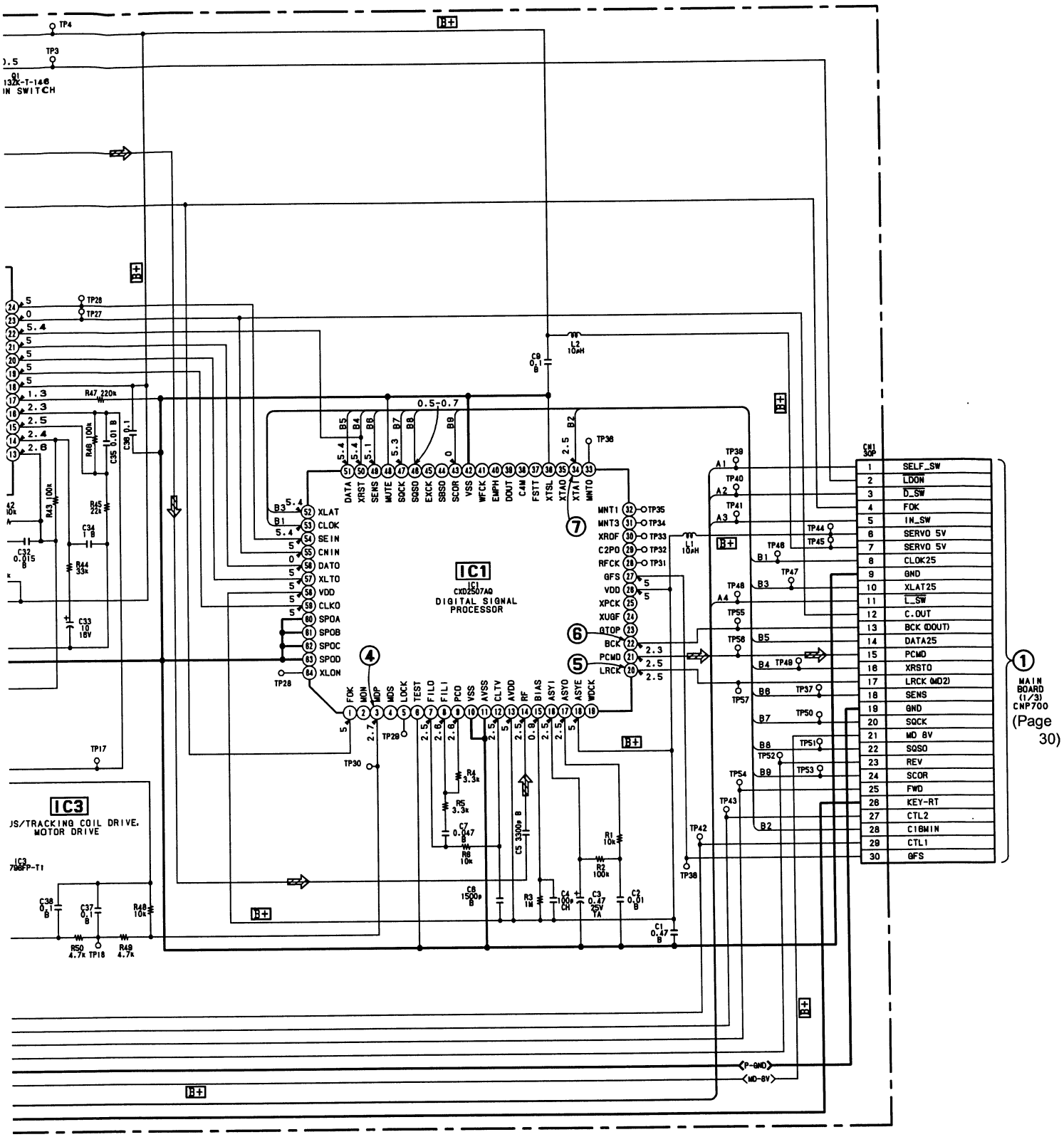

Note:

- Voltage and waveforms are dc with respect to ground under no-signal conditions.
  no mark : CD PLAY
  * : Impossible to measure

www.manualscenter.com

4-8. PRINTED WIRING BOARD — MAIN SECTION —

• **Semiconductor Location (side A)**

Ref. No.	Location
D403	B-3
D603	G-2
D881	H-4
D909	D-10
D914	B-9
D918	J-9
D919	K-9
D920	B-9
D930	C-9
D940	D-10
IC401	F-6
IC601	F-3
IC602	I-3
IC603	G-3
IC801	J-7
Q110	B-4
Q111	B-4
Q210	C-4
Q211	C-5
Q615	F-5
Q618	J-1
Q905	C-10
Q906	H-5
Q907	I-12
Q908	I-12
Q913	G-13
Q914	K-9
Q915	K-9
Q916	C-9
Q917	C-10
Q918	C-10
Q919	G-13
Q924	D-12
Q925	D-11
Q940	D-11

【MAIN BOARD】(SIDE A)

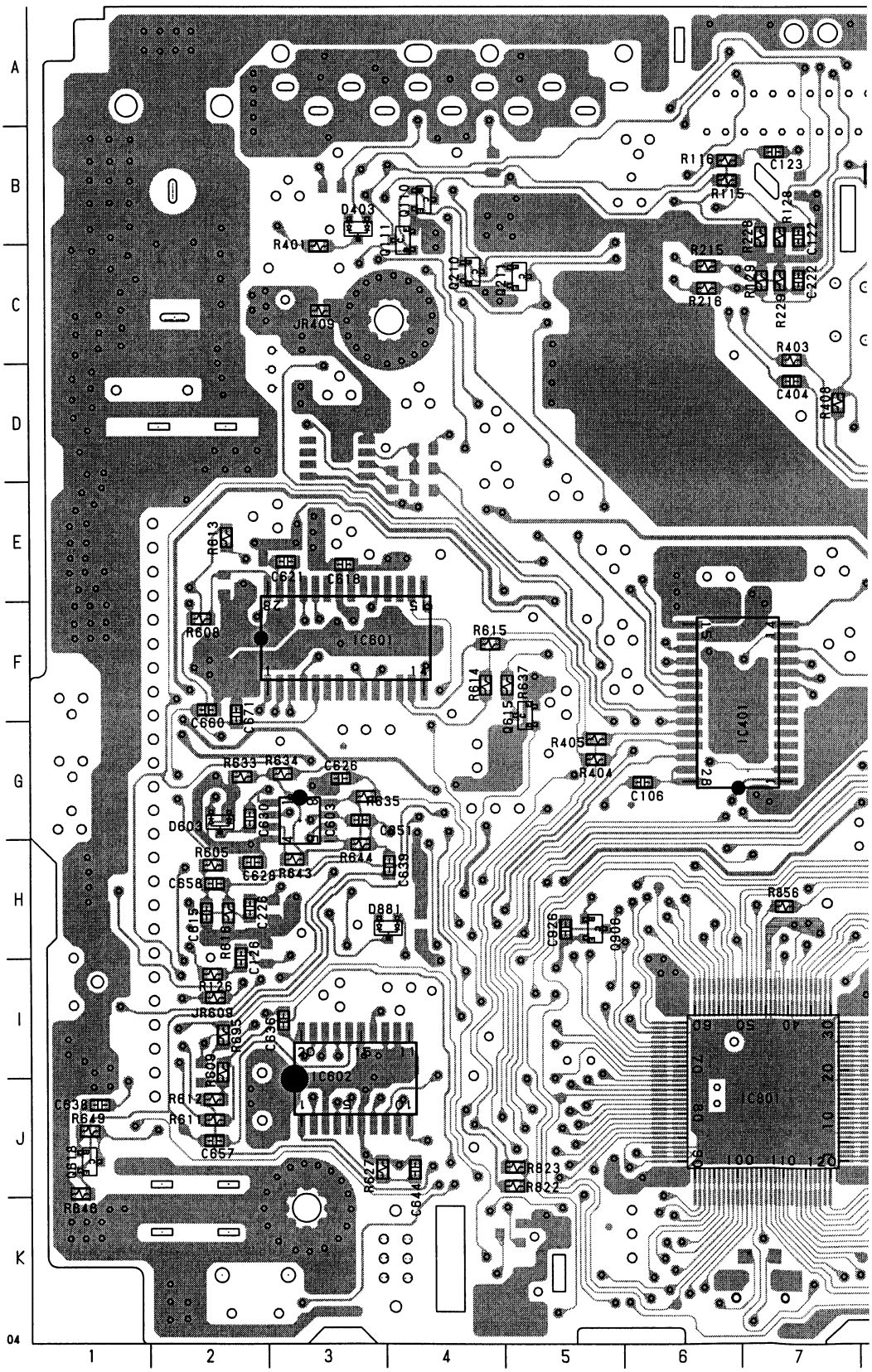

www.manualscenter.com

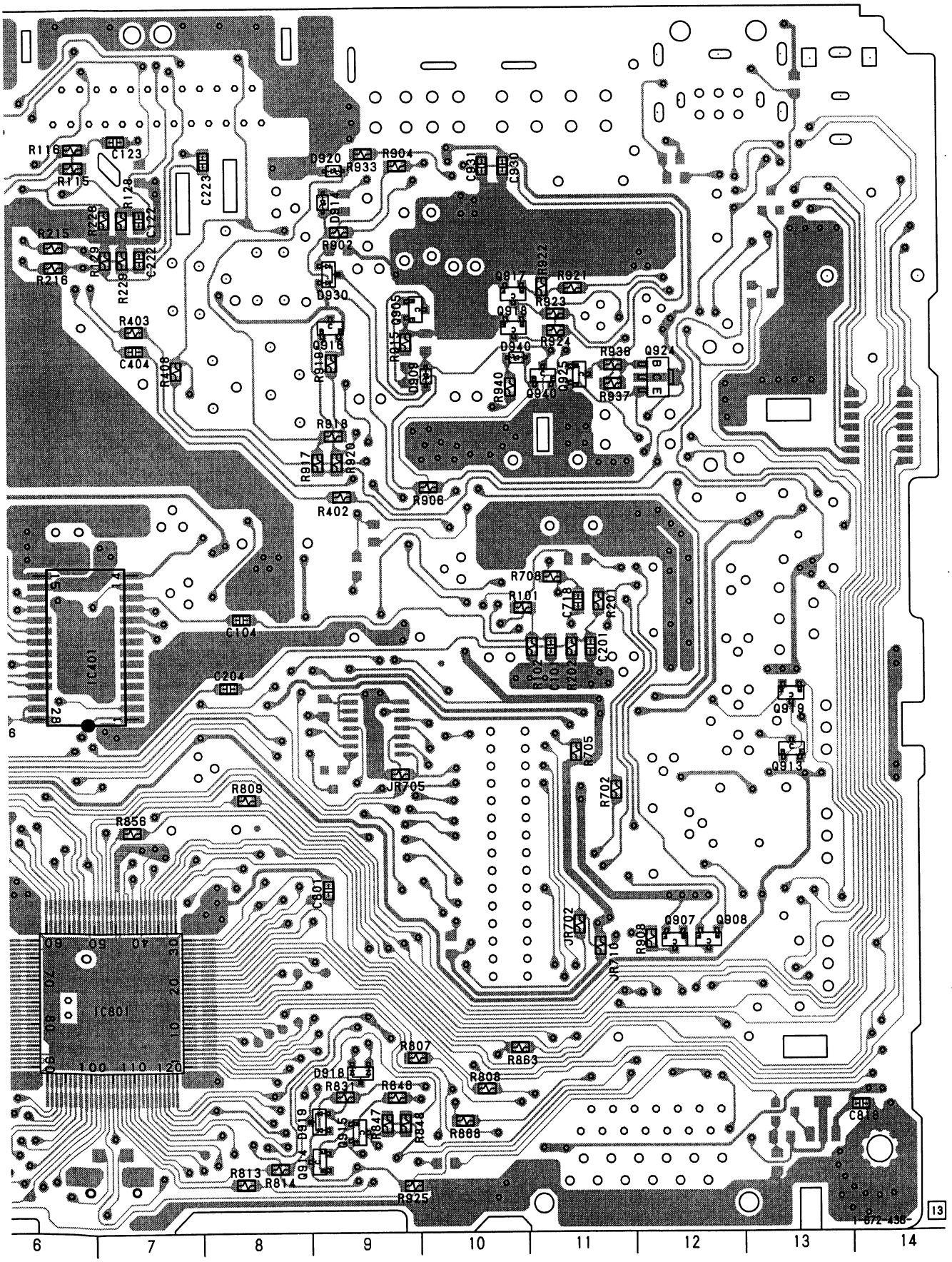

www.manualscenter.com

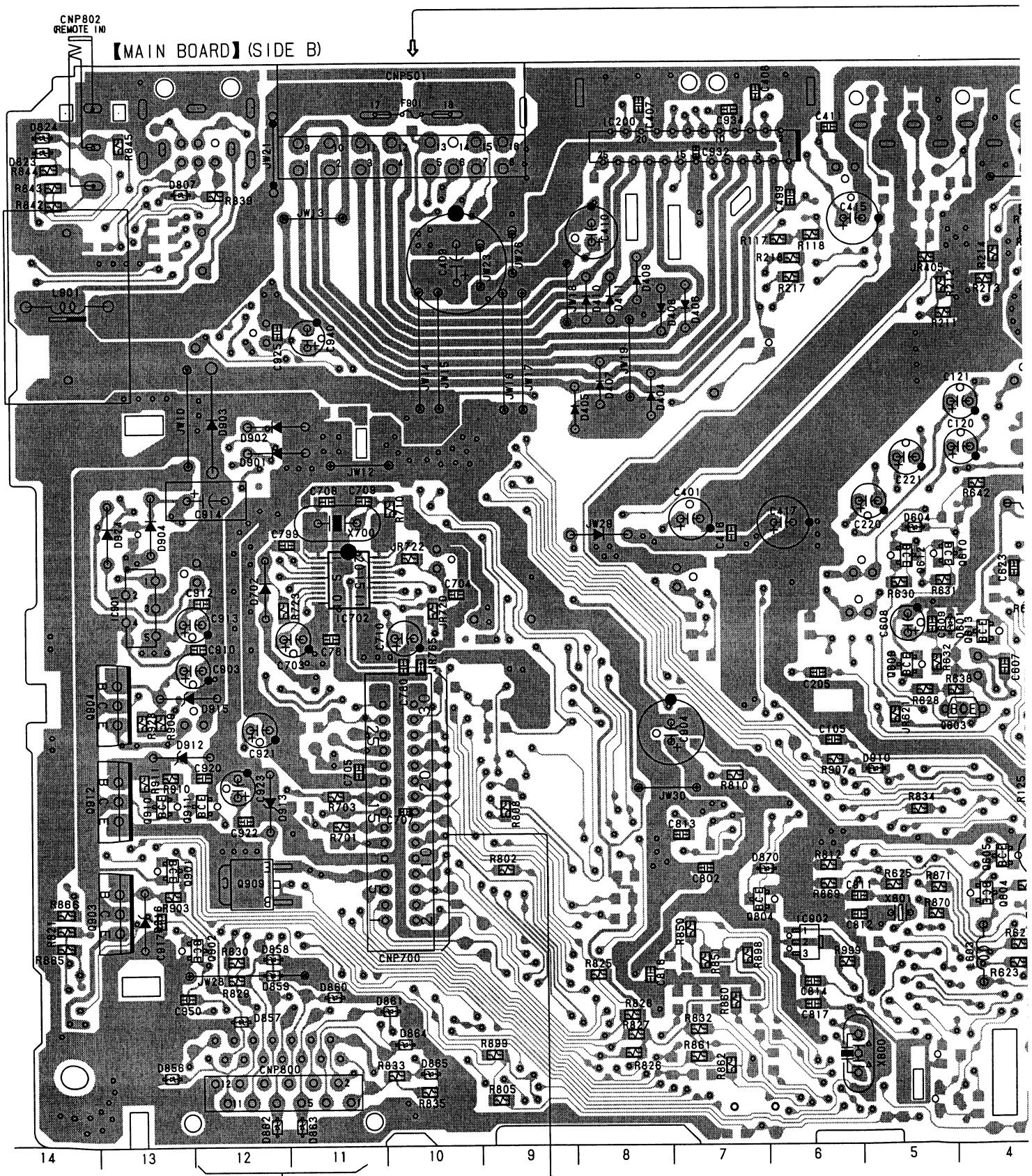

www.manualscenter.com

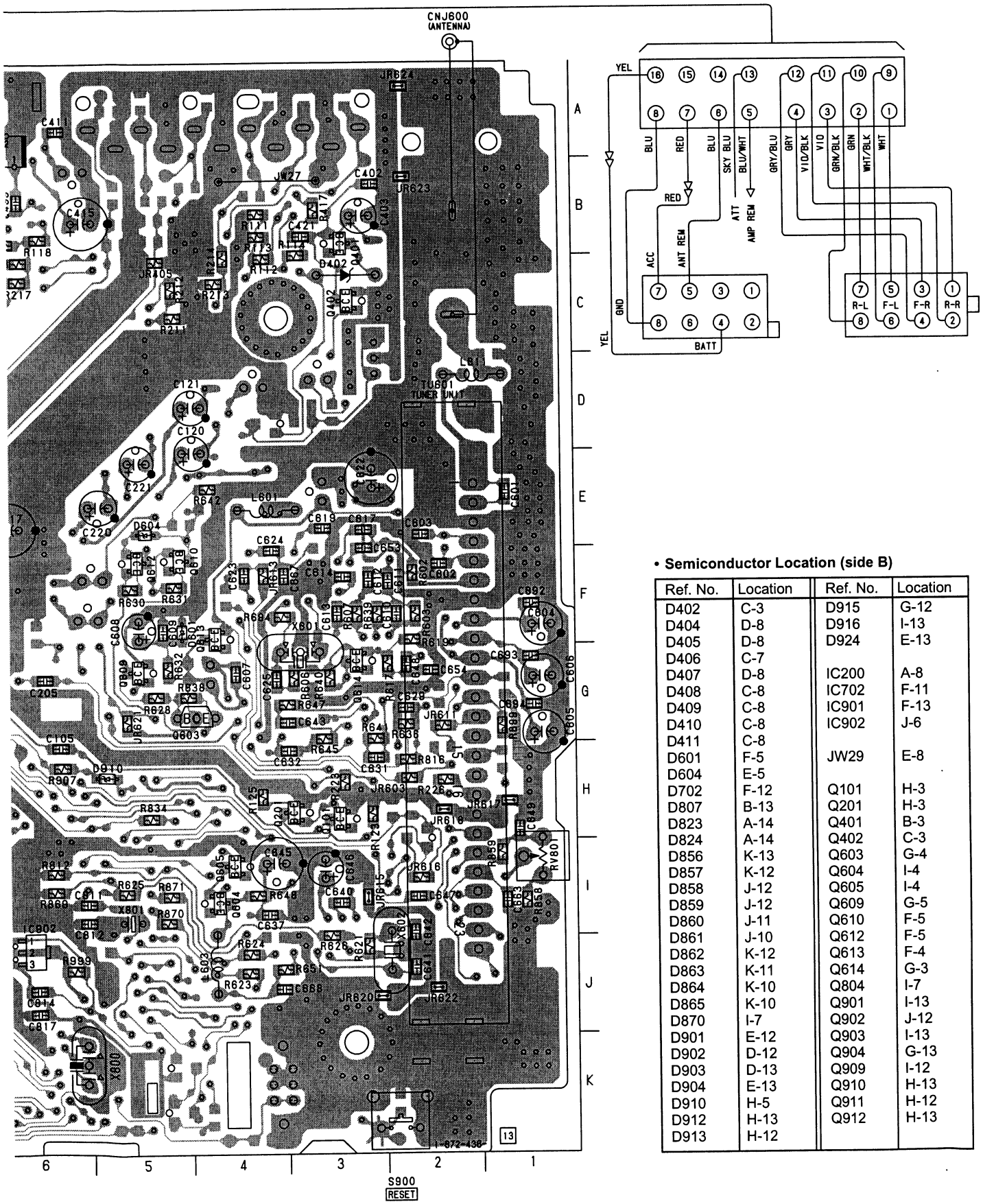

• **Semiconductor Location (side B)**

Ref. No.	Location	Ref. No.	Location
D402	C-3	D915	G-12
D404	D-8	D916	I-13
D405	D-8	D924	E-13
D406	C-7		
D407	D-8	IC200	A-8
D408	C-8	IC702	F-11
D409	C-8	IC901	F-13
D410	C-8	IC902	J-6
D411	C-8		
D601	F-5	JW29	E-8
D604	E-5		
D702	F-12	Q101	H-3
D807	B-13	Q201	H-3
D823	A-14	Q401	B-3
D824	A-14	Q402	C-3
D856	K-13	Q603	G-4
D857	K-12	Q604	I-4
D858	J-12	Q605	I-4
D859	J-12	Q609	G-5
D860	J-11	Q610	F-5
D861	J-10	Q612	F-5
D862	K-12	Q613	F-4
D863	K-11	Q614	G-3
D864	K-10	Q804	I-7
D865	K-10	Q901	I-13
D870	I-7	Q902	J-12
D901	E-12	Q903	I-13
D902	D-12	Q904	G-13
D903	D-13	Q909	I-12
D904	E-13	Q910	H-13
D910	H-5	Q911	H-12
D912	H-13	Q912	H-13
D913	H-12		

www.manualscenter.com

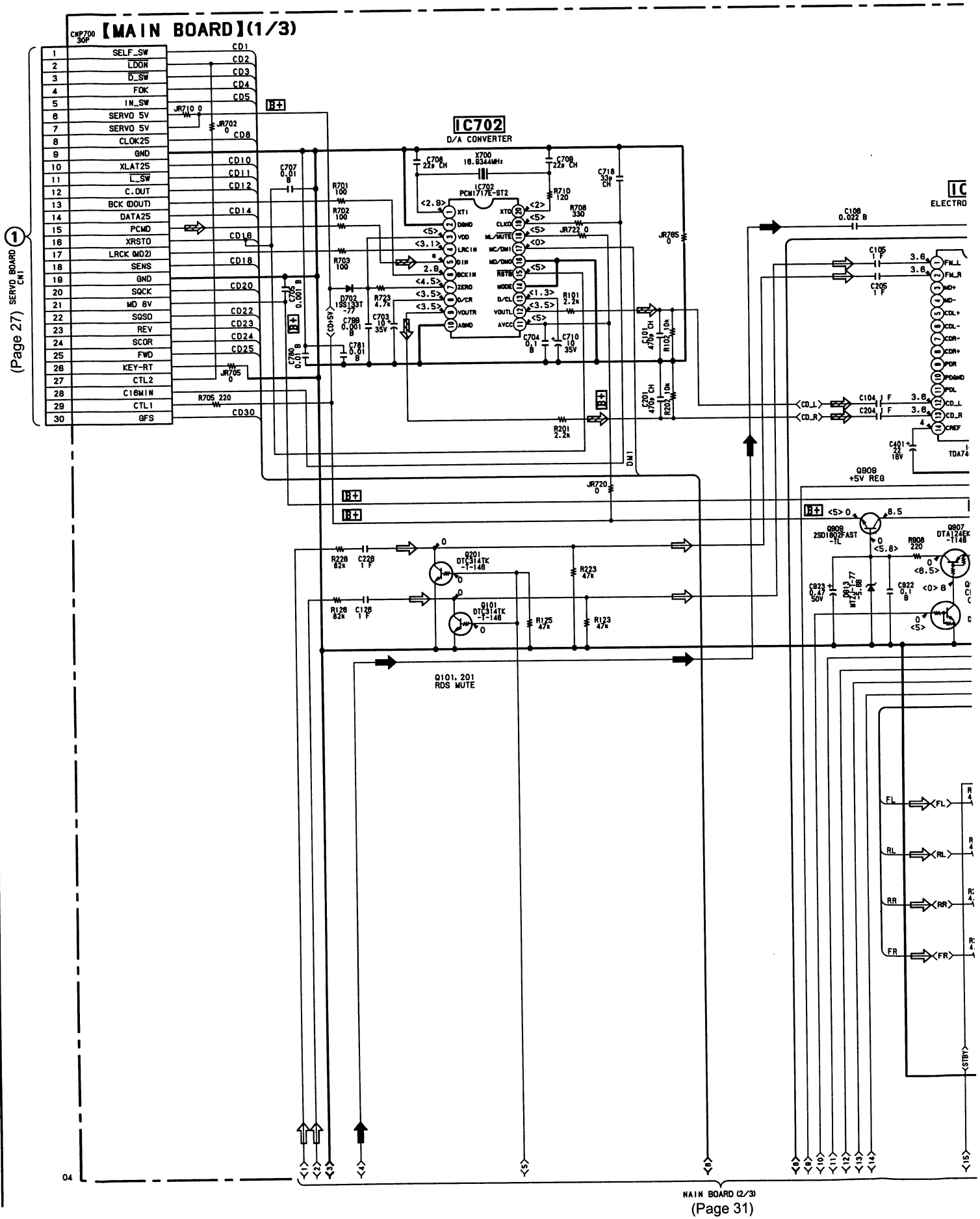

www.manualscenter.com

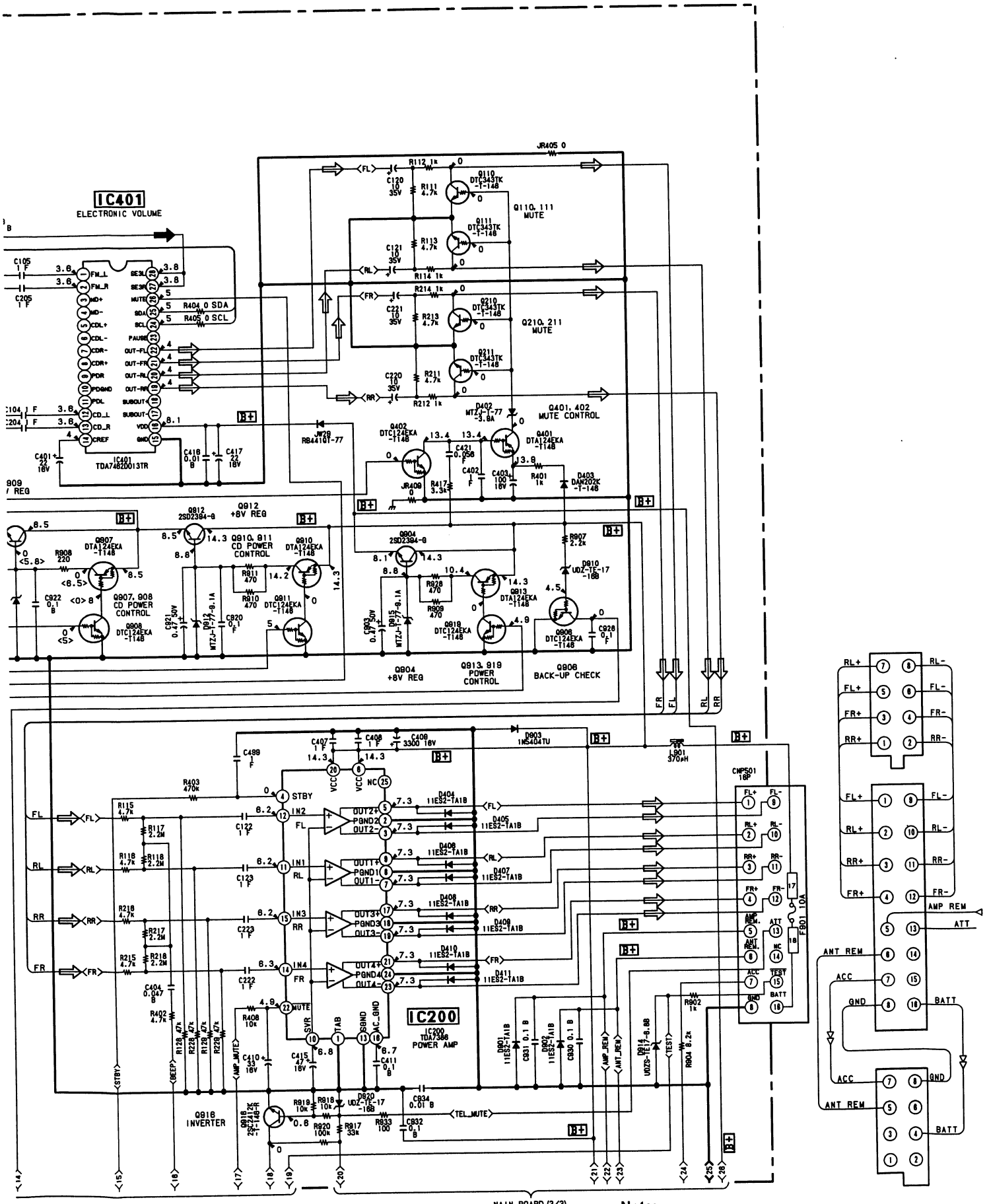

Note:

- Voltage is dc with respect to ground under no-signal (detuned) condition.

no mark : FM
( ) : MW
< > : CD PLAY

www.manualscenter.com

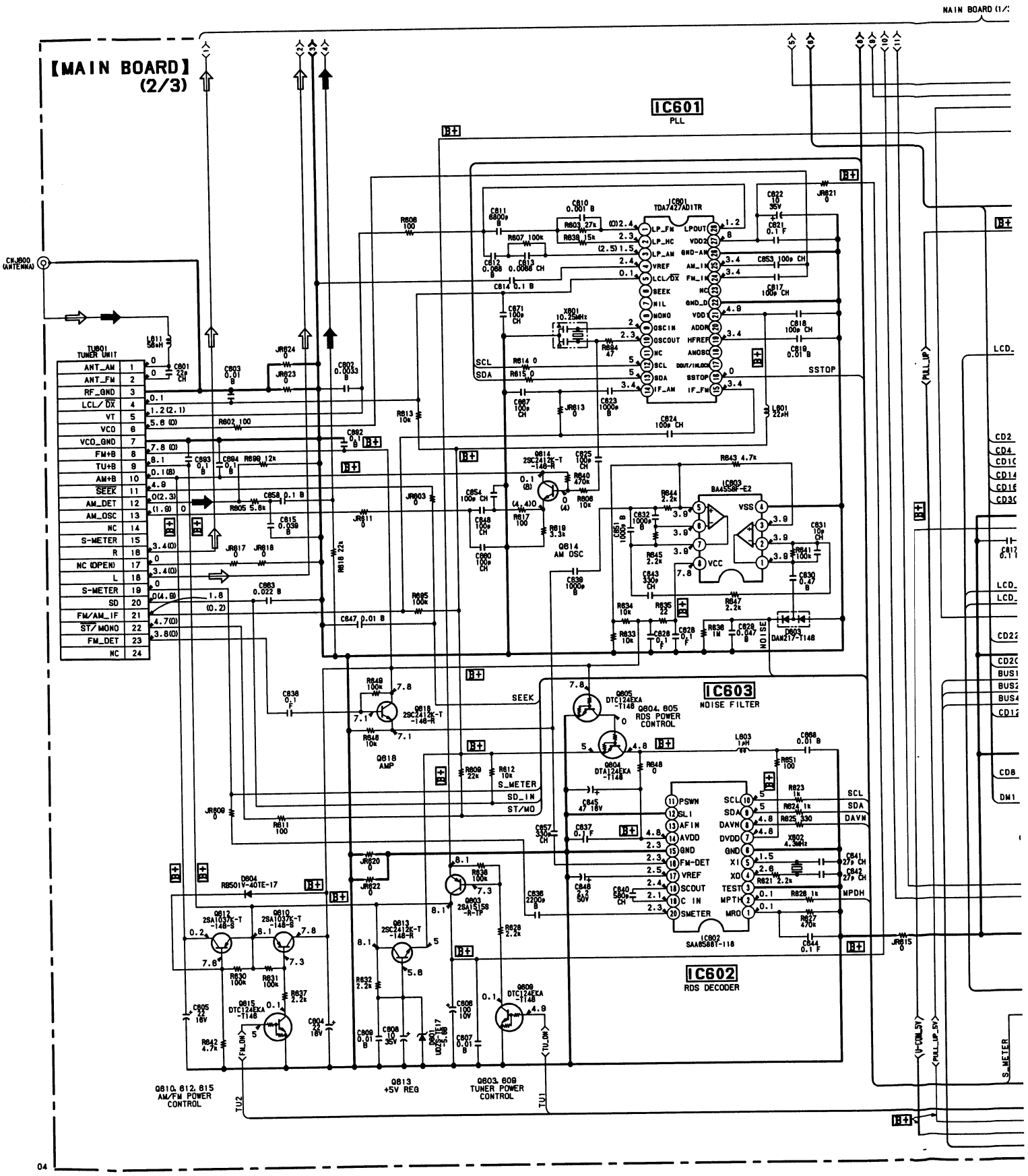

www.manualscenter.com

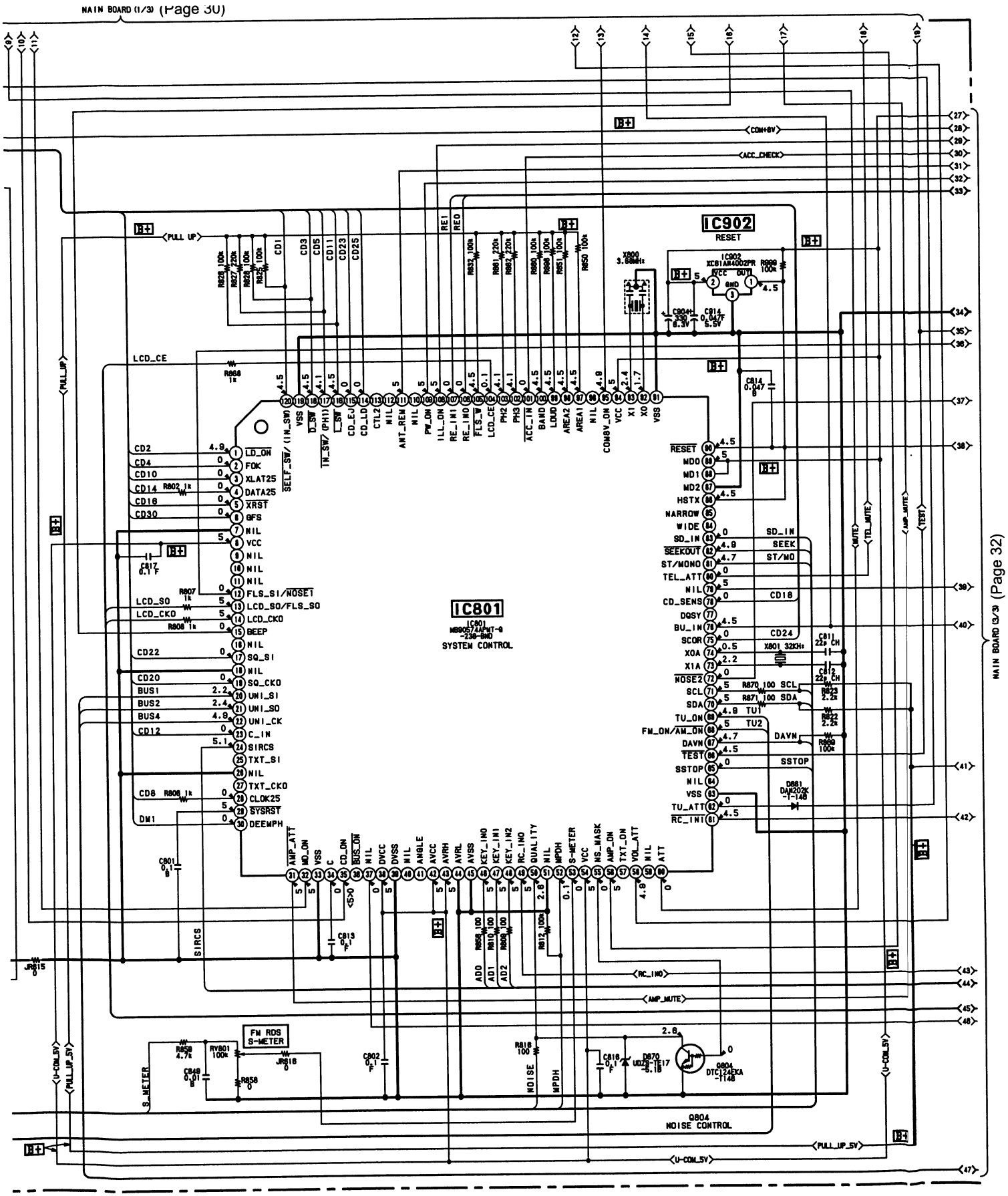

Note:

- Voltage is dc with respect to ground under no-signal (detuned) condition.
  no mark : FM
  ( ) : MW
  < > : CD PLAY

www.manualscenter.com

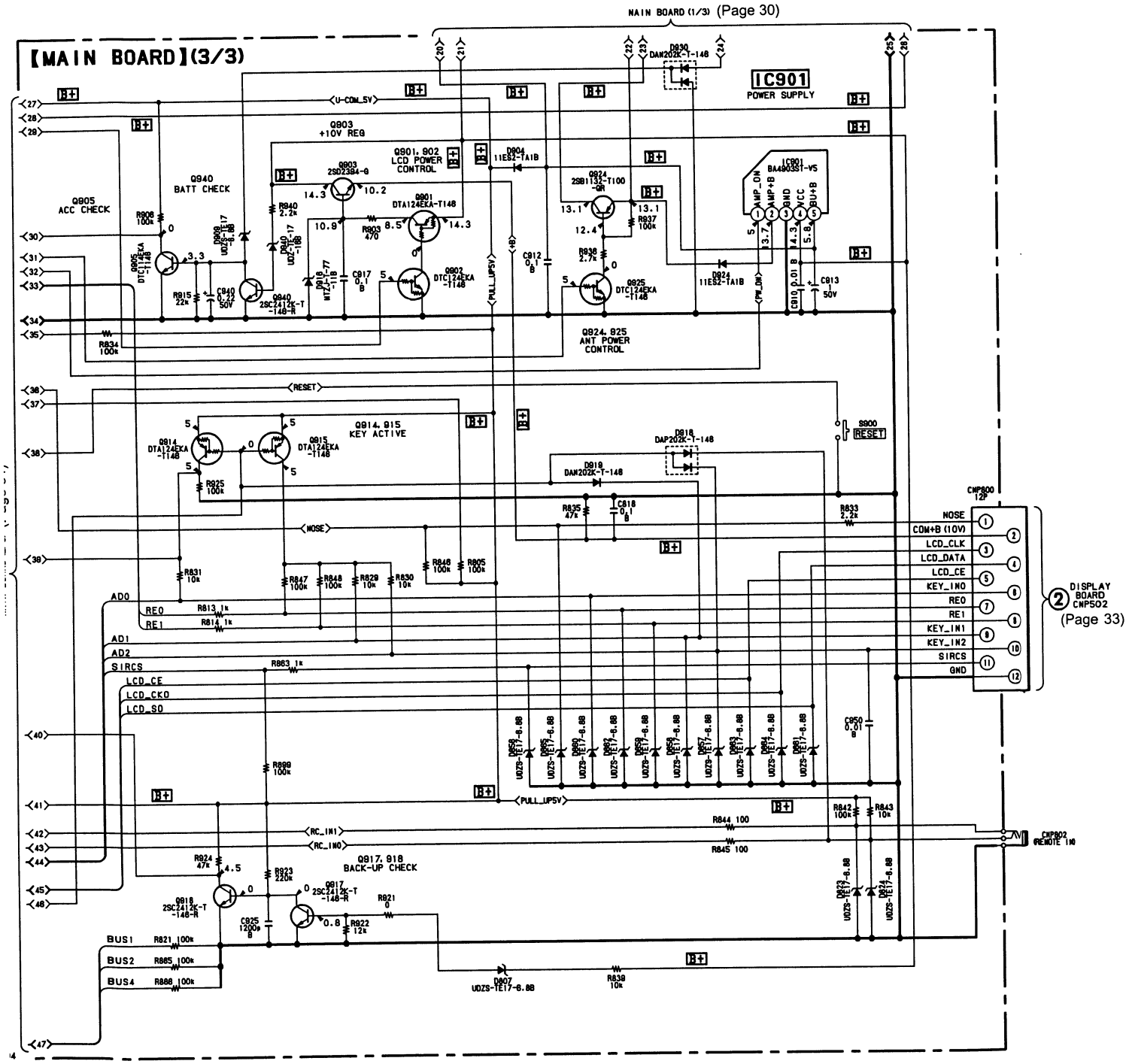

www.manualscenter.com

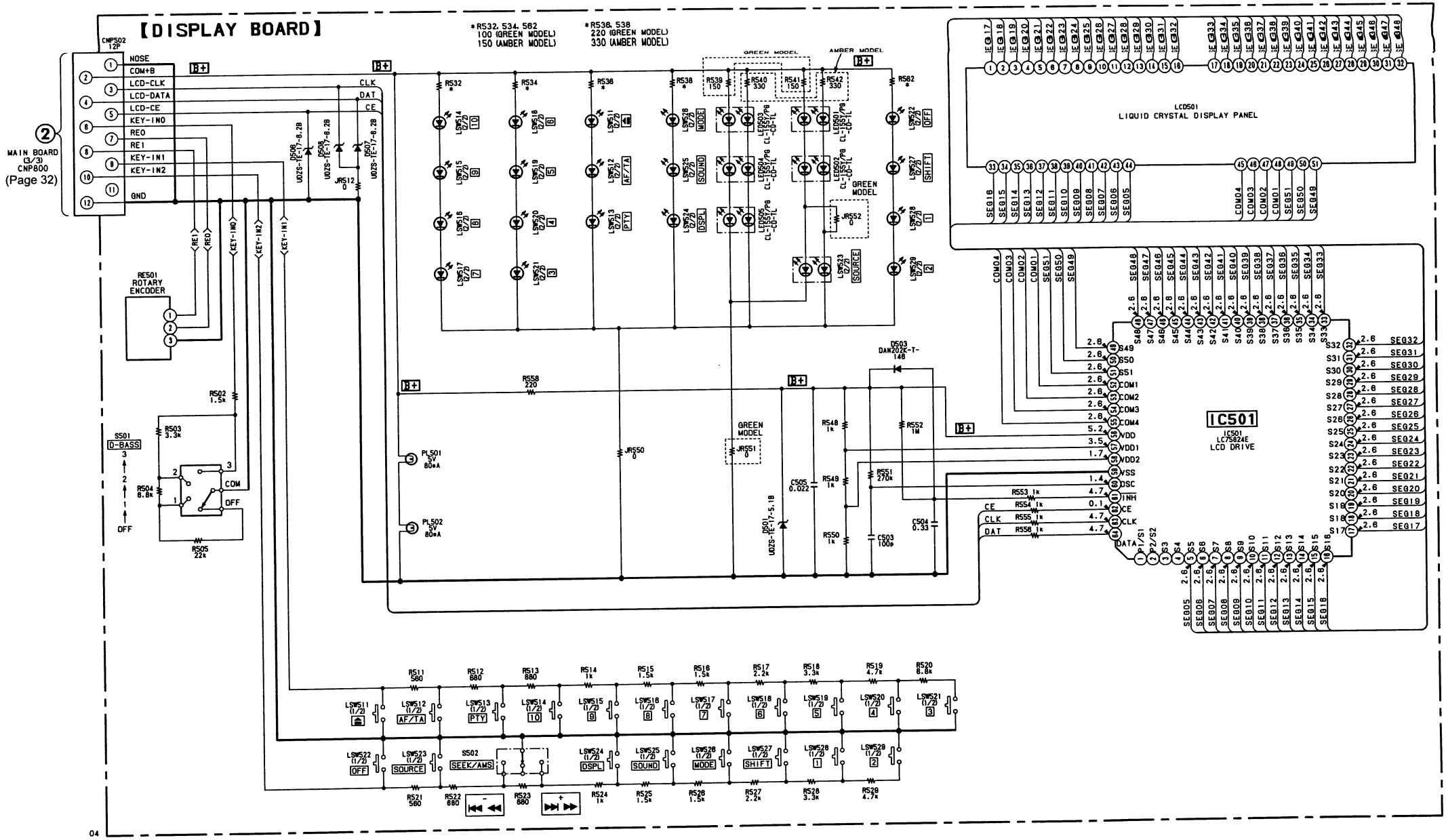

www.manualscenter.com

4-13. PRINTED WIRING BOARD — DISPLAY SECTION —

【DISPLAY BOARD】(SIDE A)

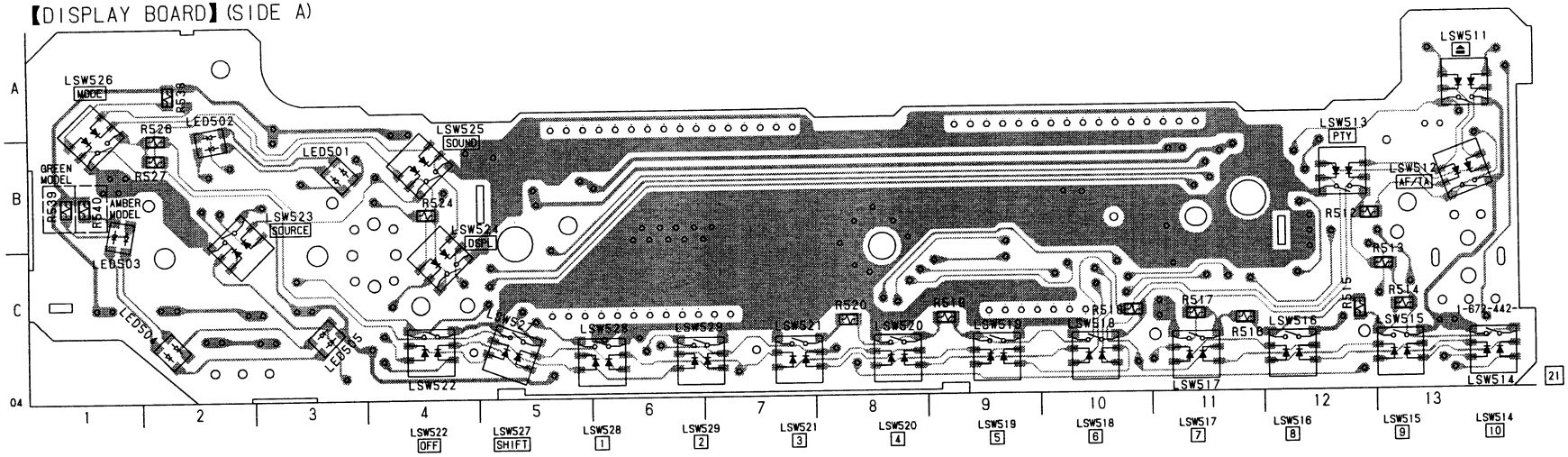

【DISPLAY BOARD】(SIDE B)

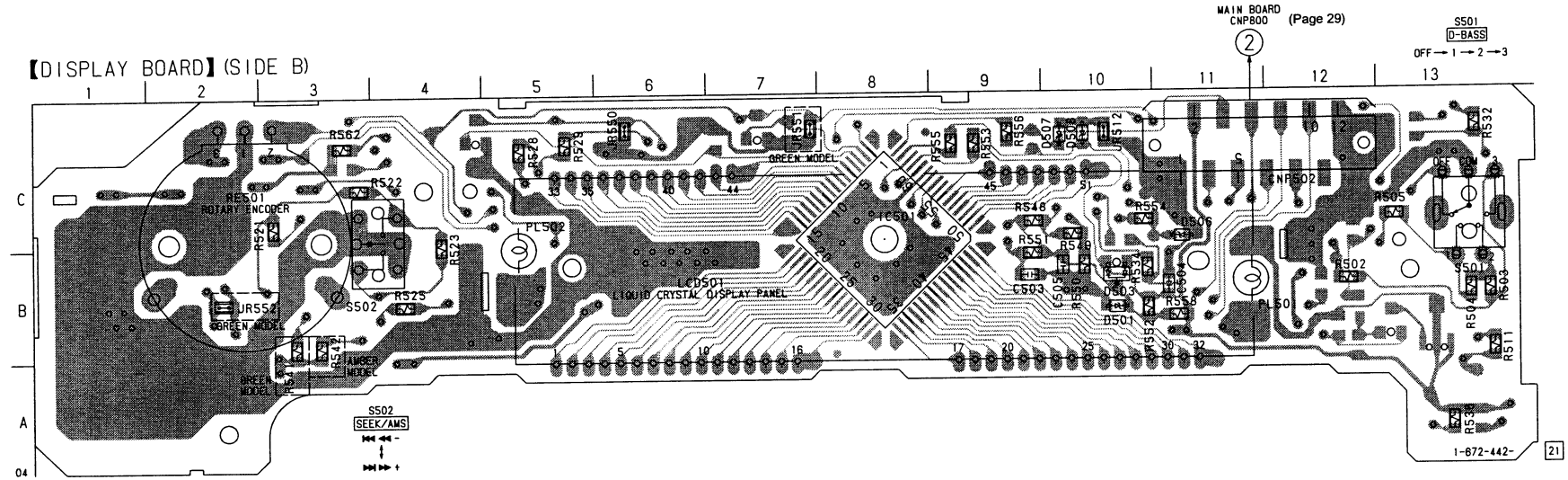

• Semiconductor Location

Ref. No.	Location	Ref. No.	Location
(D501)	B-10	LED501	B-3
(D503)	B-10	LED502	B-2
(D506)	B-11	LED503	B-1
(D507)	C-10	LED504	C-2
(D509)	C-10	LED505	C-3
(IC501)	C-8		

( ) : SIDE B

www.manualscenter.com

• **IC Block Diagrams**

IC1 CXD2507AQ

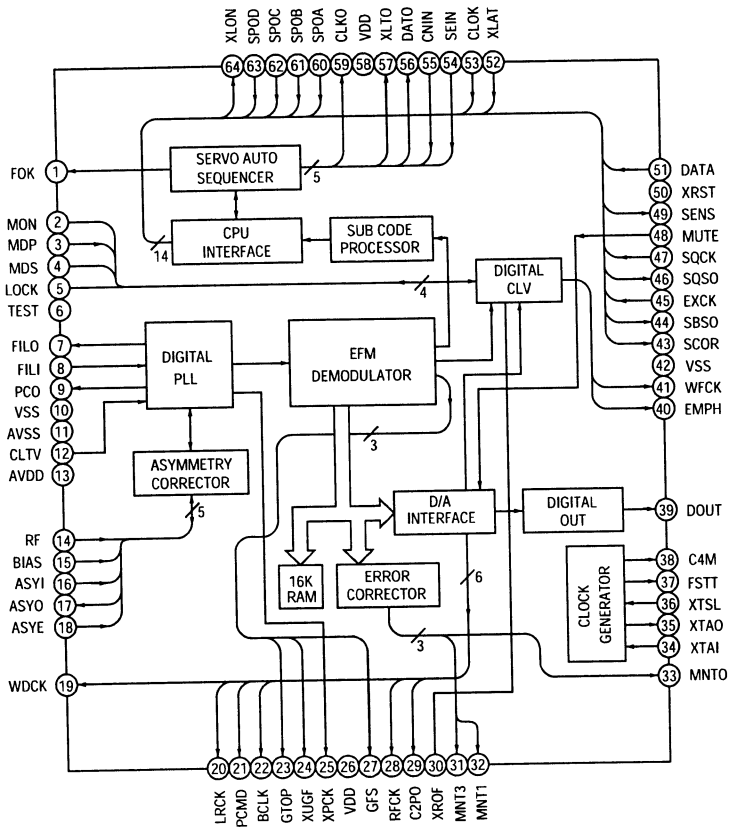

IC3 BA6796FP-T1

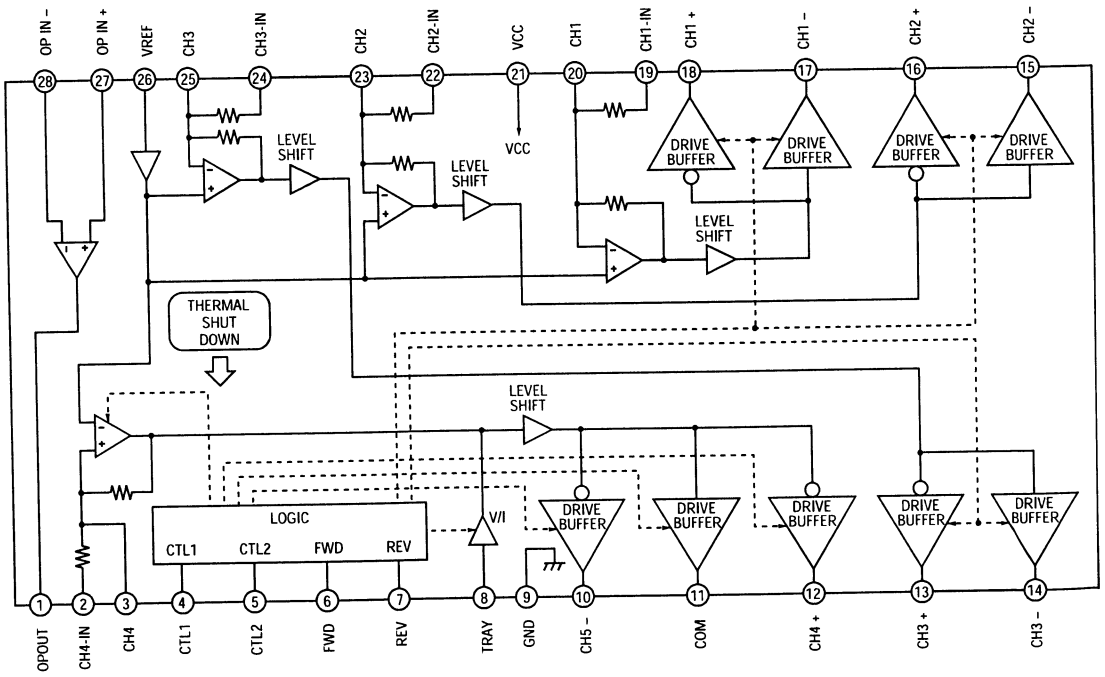

www.manualscenter.com

IC2 CXA1782BQ

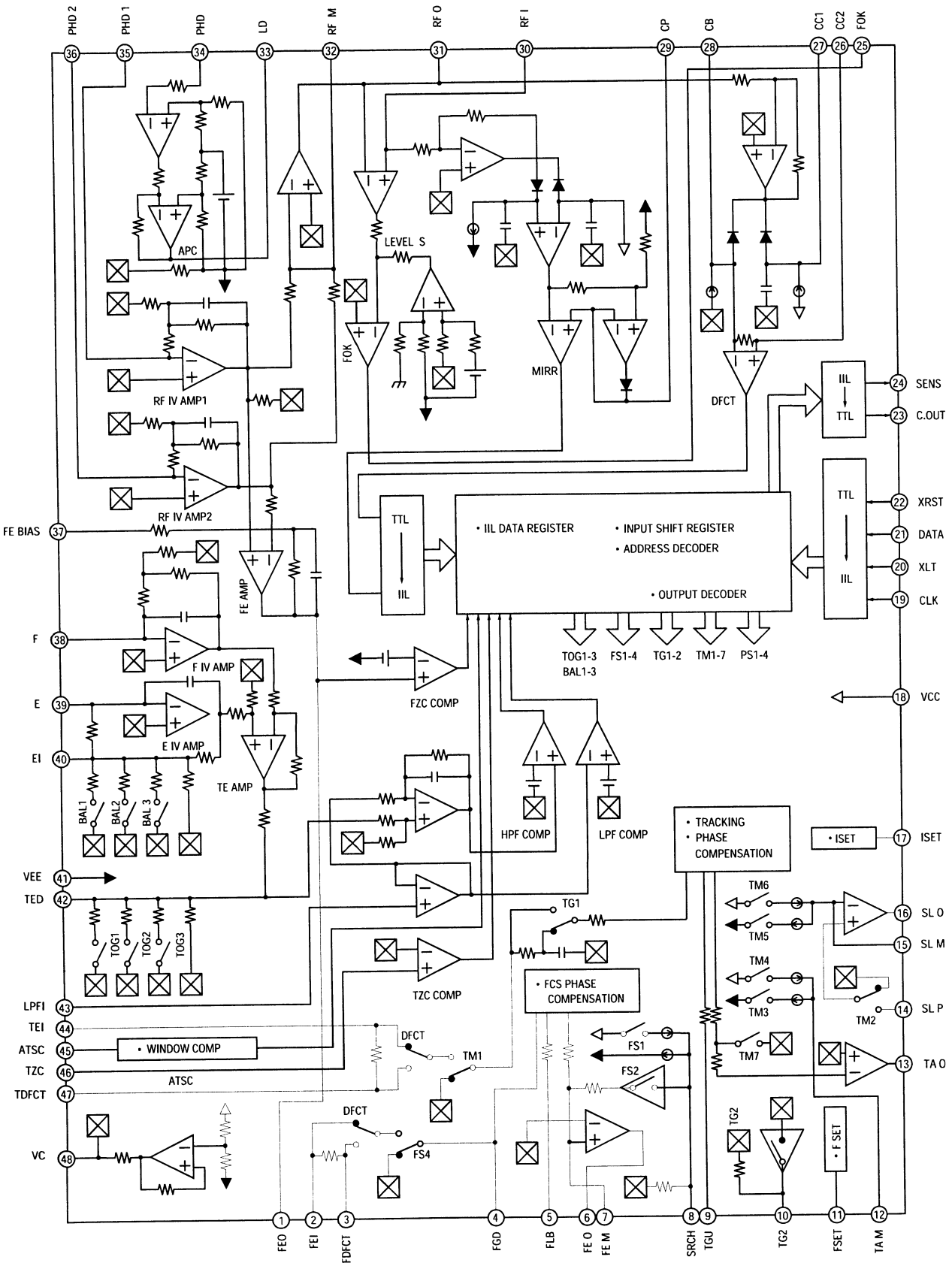

www.manualscenter.com

IC401 TDA7462D013TR

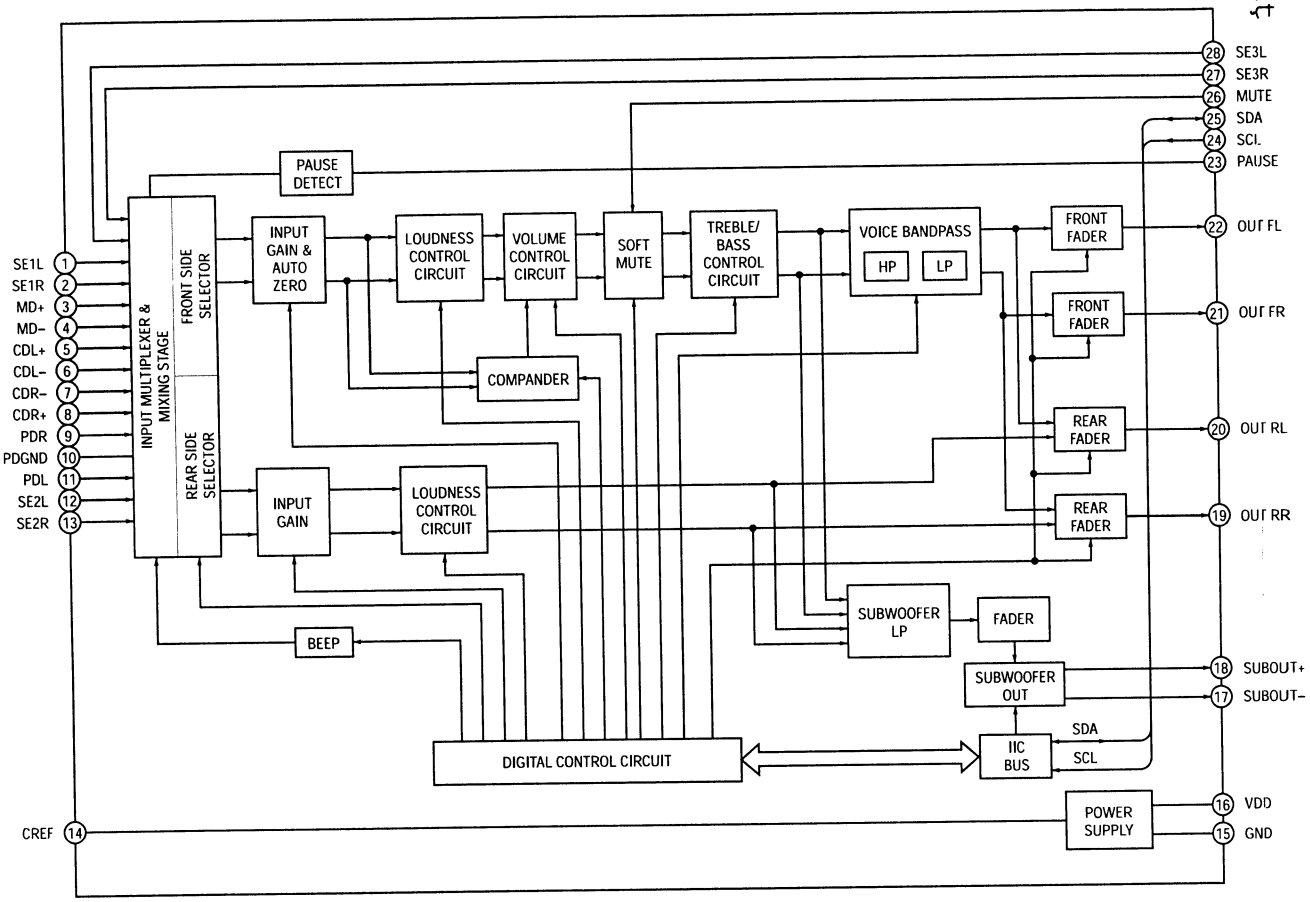

IC702 PCM1717E-ST2

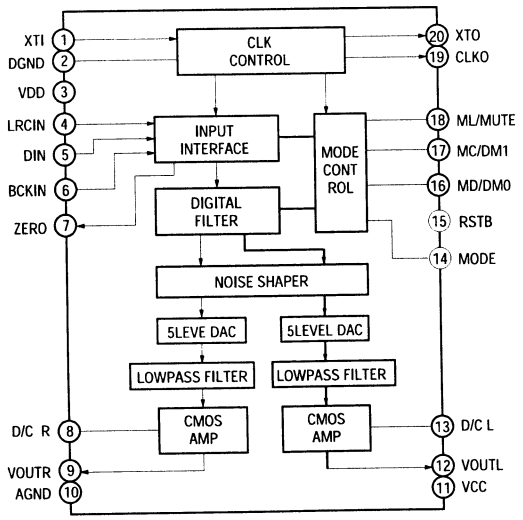

www.manualscenter.com

IC601 TDA7427AD1TR

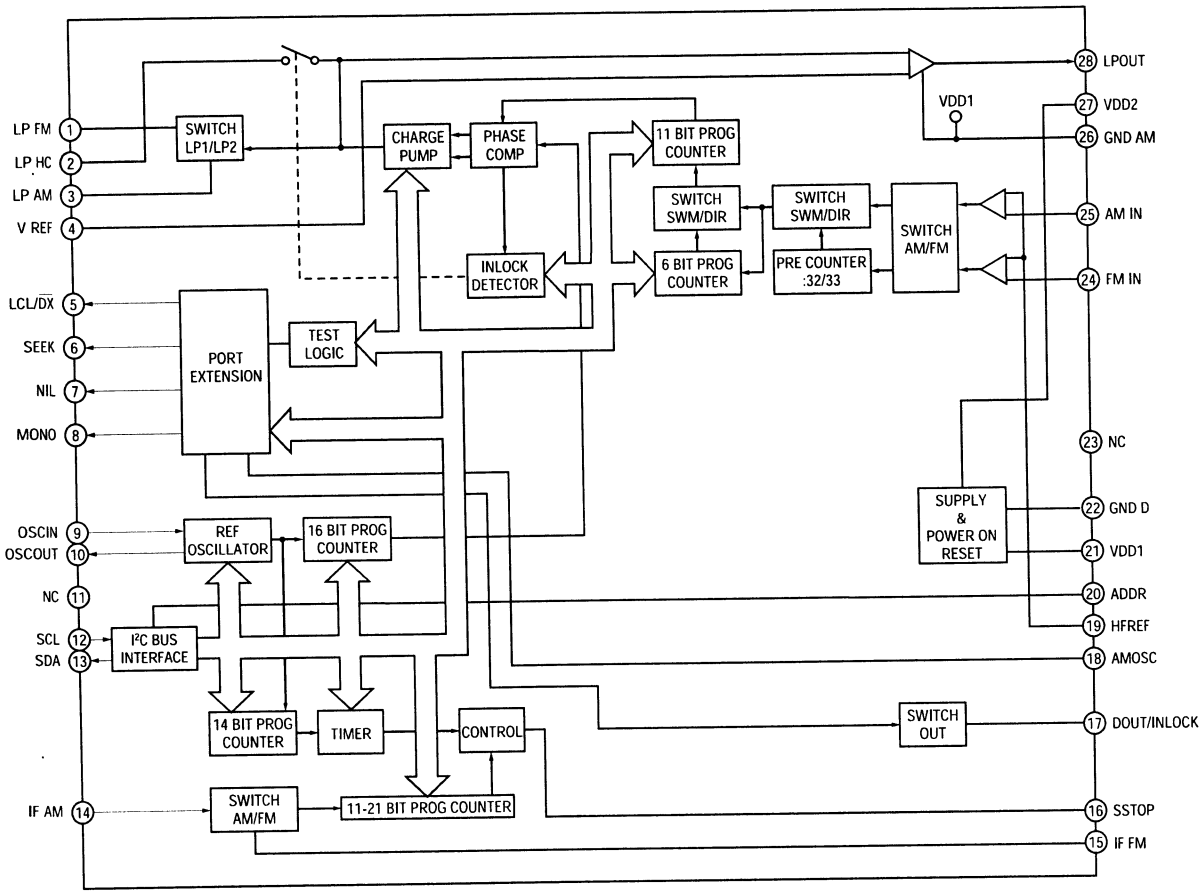

IC602 SAA6588T-118

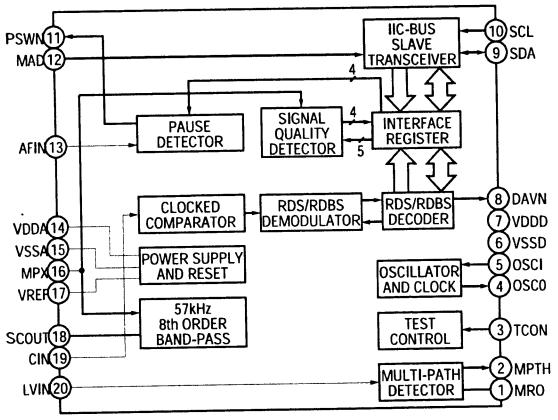

IC901 BA4903ST-V5

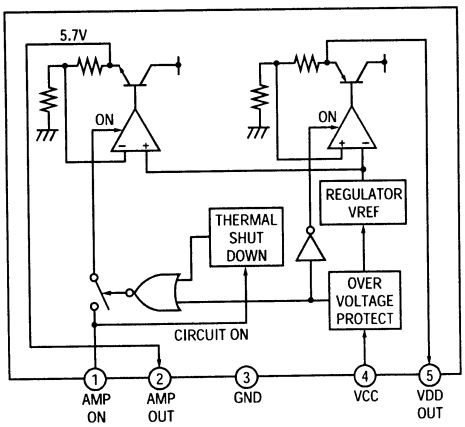

www.manualscenter.com

SECTION 5
EXPLODED VIEWS

NOTE:
- The mechanical parts with no reference number in the exploded views are not supplied.
- Items marked "*" are not stocked since they are seldom required for routine service. Some delay should be anticipated when ordering these items.
- -XX and -X mean standardized parts, so they may have some difference from the original one.

- Color Indication of Appearance Parts
  Example :
  KNOB, BALANCE (WHITE) ... (RED)
  ↑ Parts Color ↑ Cabinet's Color
- Accessories and packing materials and hardware (# mark) list are given in the last of this parts list.

The components identified by mark ⚠ or dotted line with mark ⚠ are critical for safety.
Replace only with part number specified.

5-1. CHASSIS SECTION

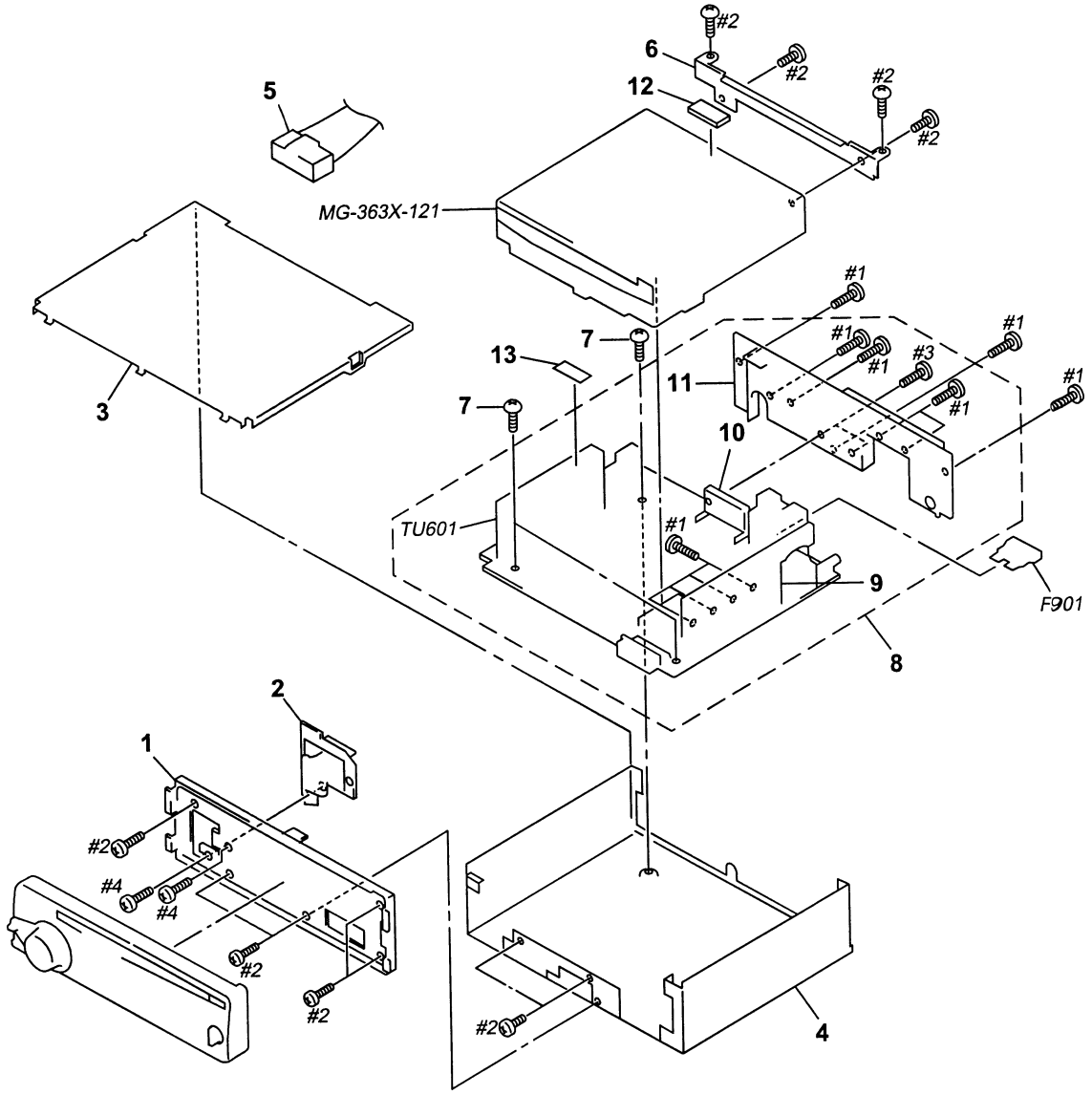

Ref. No.	Part No.	Description	Remark
1	X-3376-728-1	PANEL (1) ASSY, SUB	
2	X-3377-993-1	LOCK ASSY	
* 3	X-3376-729-1	COVER ASSY	
* 4	3-030-876-01	CHASSIS (MAIN)	
5	1-776-527-61	CORD (WITH CONNECTOR) (ISO) (POWER)	
* 6	3-030-927-01	BRACKET (M/D)	
7	3-915-923-01	SCREW, GROUND POINT	
* 8	A-3294-795-A	MAIN BOARD, COMPLETE	

Ref. No.	Part No.	Description	Remark
* 9	3-030-928-01	HEAT SINK (REG)	
* 10	3-019-565-01	BRACKET (IC)	
* 11	3-030-991-21	HEAT SINK	
* 12	3-024-285-11	CUSHION (RUBBER)	
13	3-937-650-01	PLATE (C), GROUND	
F901	1-532-877-11	FUSE (BLADE TYPE) (AUTO FUSE) 10A	
TU601	1-693-440-12	TUNER UNIT	

www.manualscenter.com

5-2. FRONT PANEL SECTION

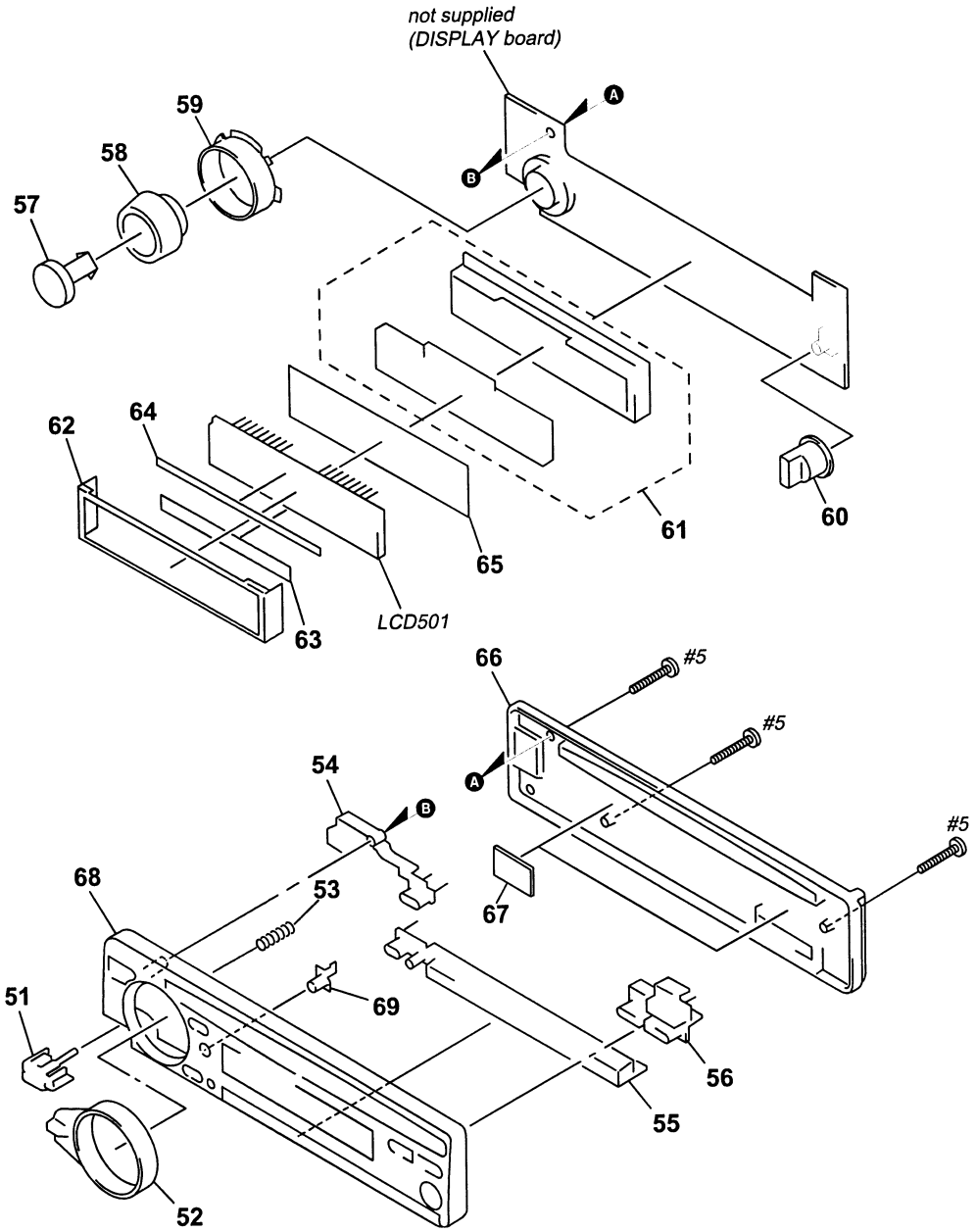

Ref. No.	Part No.	Description	Remark
51	3-019-549-51	BUTTON (RELEASE)	
52	3-019-544-11	KNOB (SEEK/AMS)	
53	3-039-482-01	SPRING (RELEASE)	
54	3-032-410-01	BUTTON (MODE/SOUND)	
55	3-030-872-01	BUTTON (1-10)	
56	3-030-873-21	BUTTON (CD EJECT)	
57	3-025-315-12	BUTTON (SOURCE)	
58	3-019-547-21	KNOB (VOL)	
59	3-019-548-01	RING	
60	3-019-543-21	KNOB (D-BASS)	

Ref. No.	Part No.	Description	Remark
* 61	X-3376-730-1	HOLDER (LCD) ASSY	
* 62	3-030-879-01	BRACKET (LCD)	
* 63	3-032-198-01	SHEET (E)	
* 64	3-032-199-01	SHEET (ESD)	
* 65	3-032-289-01	SHEET (DIFFUSION 5)	
66	3-030-863-01	PANEL, FRONT BACK	
* 67	3-030-997-01	SHEET, BACK	
68	X-3378-421-1	PANEL ASSY, FRONT	
69	3-019-527-01	BUTTON (DSPL)	
LCD501	1-803-440-11	DISPLAY PANEL, LIQUID CRYSTAL	

www.manualscenter.com

5-3. CD MECHANISM SECTION (1)
(MG-363X-121)

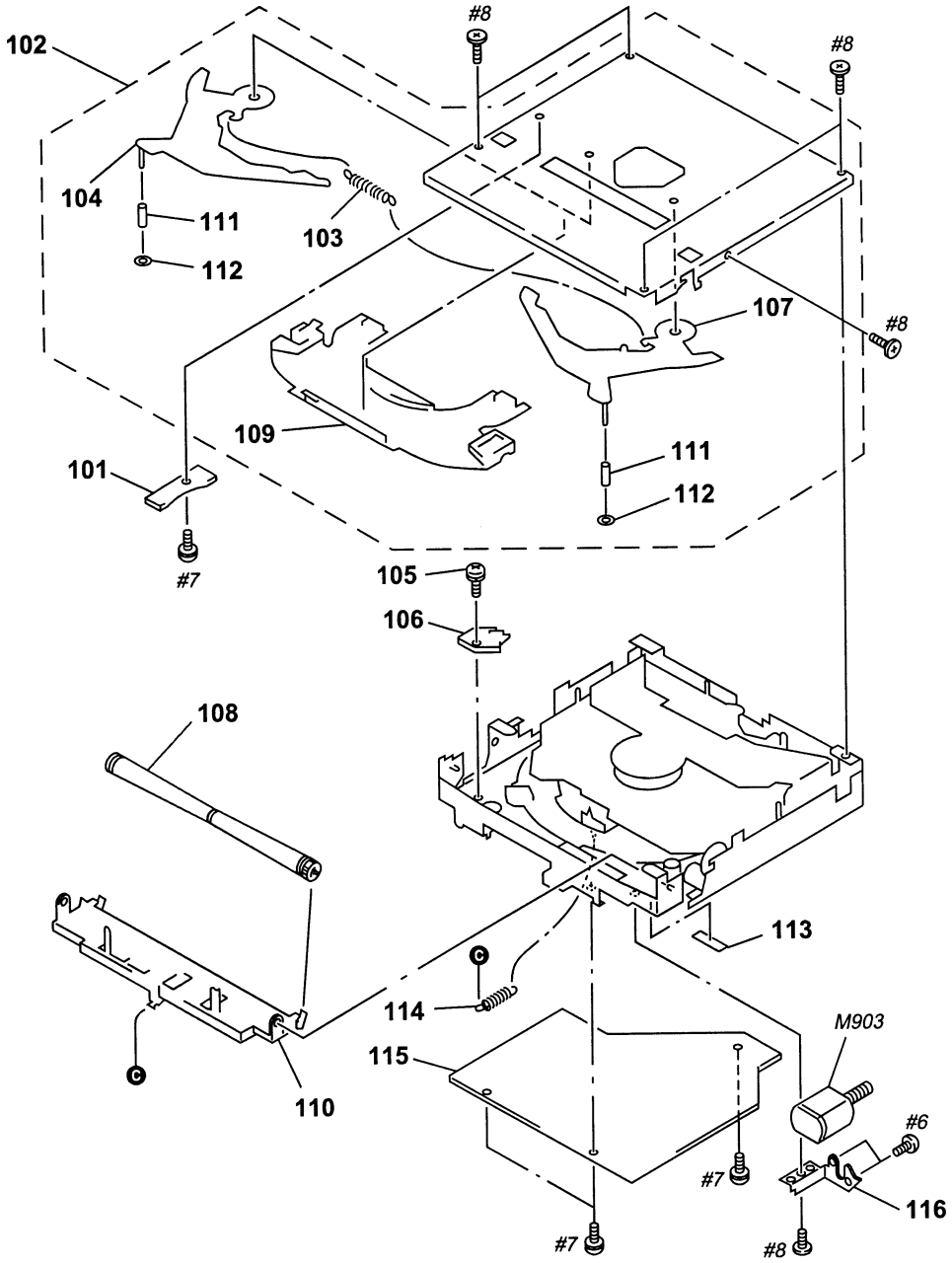

Ref. No.	Part No.	Description	Remark
* 101	1-659-836-11	DISC IN SW BOARD	
* 102	A-3291-816-B	CHASSIS (T) SUB ASSY	
103	3-931-909-01	SPRING (LR), TENSION	
104	X-3371-501-1	LEVER (L) ASSY	
105	3-338-737-01	SCREW (2X3), +PS	
* 106	1-659-837-11	LOAD SW BOARD	
107	X-3371-502-1	LEVER (R) ASSY	
108	A-3301-203-A	ROLLER ASSY	
109	3-931-908-01	GUIDE (DISC)	

Ref. No.	Part No.	Description	Remark
110	3-931-902-04	ARM (ROLLER)	
111	3-936-756-01	ROLLER (D)	
112	3-321-393-01	WASHER, STOPPER	
* 113	3-939-139-01	SPACER	
114	3-931-916-01	SPRING (RA), TENSION	
* 115	A-3309-227-A	SERVO BOARD, COMPLETE	
* 116	3-007-530-01	BRACKET (MOTOR)	
M903	A-3291-676-A	MOTOR SUB ASSY, LOADING (LOADING)	

www.manualscenter.com

5-4. CD MECHANISM SECTION (2)
(MG-363X-121)

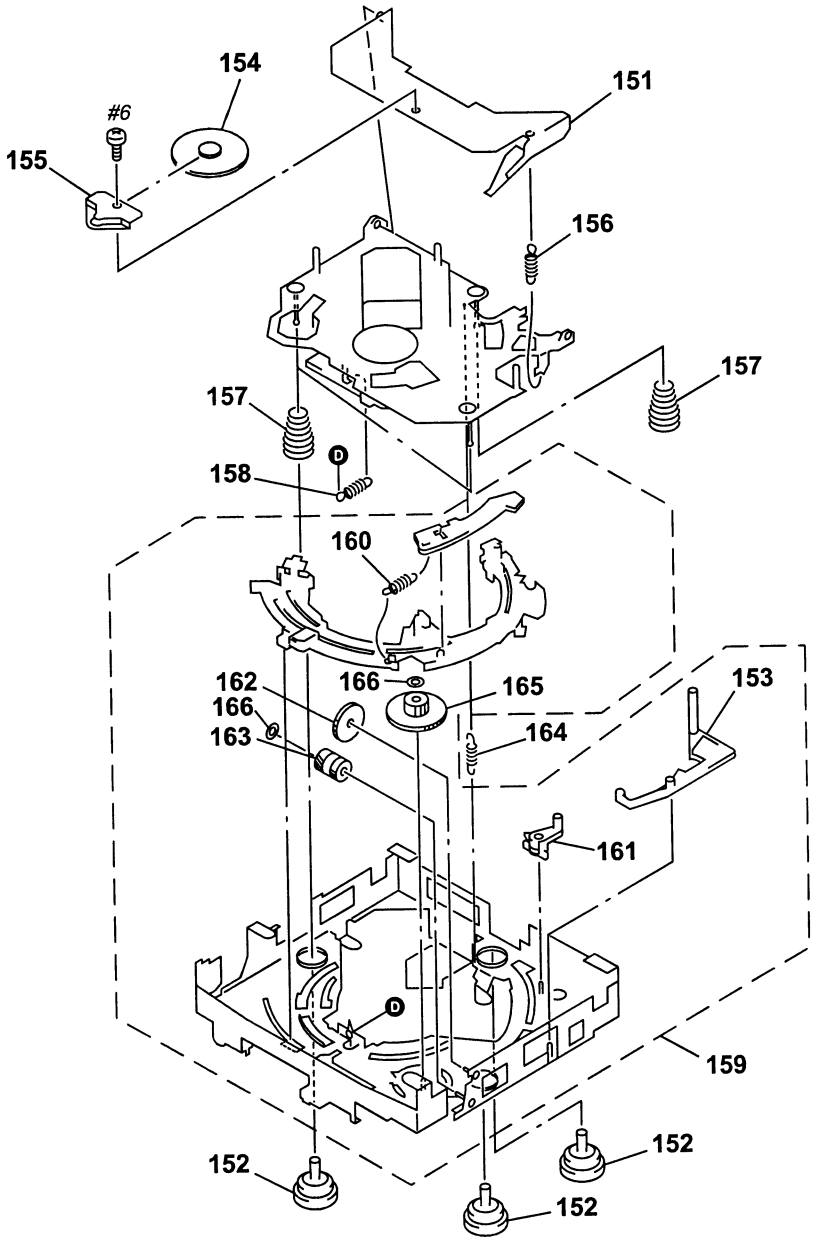

Ref. No.	Part No.	Description	Remark
151	3-931-893-01	ARM, CHUCKING	
152	3-931-897-01	DAMPER (T)	
153	3-931-879-02	LEVER (D)	
* 154	3-913-404-11	RETAINER (DISC)	
155	3-931-894-01	BRACKET (CP)	
156	3-931-895-01	SPRING (CH), TENSION	
157	3-931-898-01	SPRING (FL), COMPRESSION	
158	3-032-483-02	SPRING (KF1), TENSION	

Ref. No.	Part No.	Description	Remark
159	A-3277-802-C	CHASSIS (M) COMPLETE ASSY	
160	3-931-883-01	SPRING (TR), TENSION	
161	3-931-881-01	LEVER (LOCK)	
162	3-931-882-02	GEAR (MDL)	
163	3-007-537-11	WHEEL (U), WORM	
164	3-032-484-01	SPRING (KR1), TENSION	
165	3-014-727-01	WHEEL (LW), WORM	
166	3-018-272-01	WASHER	

www.manualscenter.com

5-5. CD MECHANISM SECTION (3)
(MG-363X-121)

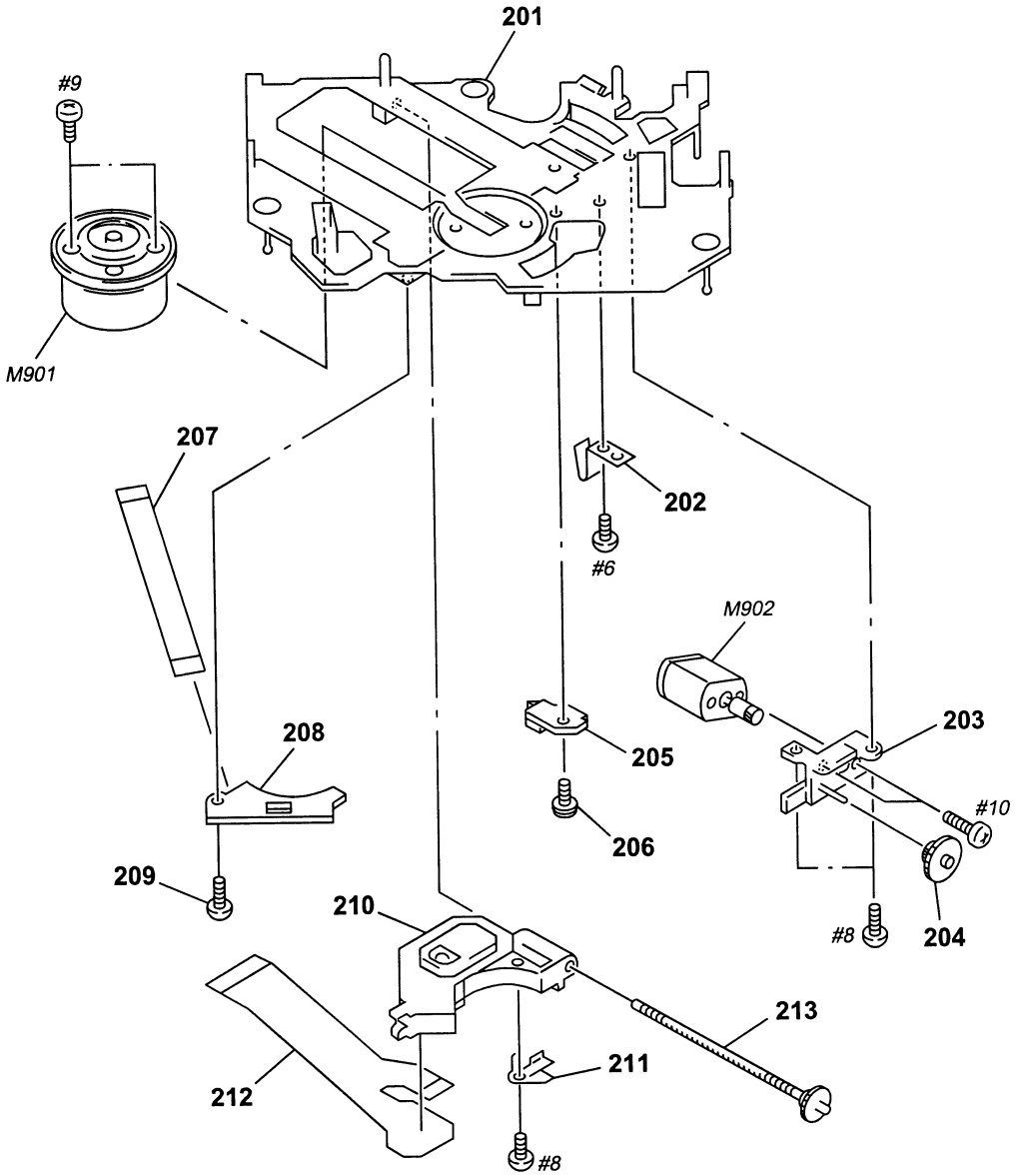

The components identified by mark ⚠ or dotted line with mark ⚠ are critical for safety. Replace only with part number specified.

Ref. No.	Part No.	Description	Remark
* 201	X-3374-022-1	CHASSIS (OP) (O/S) ASSY	
202	3-931-829-01	SPRING (SL), PLATE	
203	X-3371-504-1	BASE (DRIVING) ASSY	
204	3-931-832-01	GEAR (SL MIDWAY)	
* 205	1-659-835-12	LIMIT SW BOARD	
206	3-338-737-01	SCREW (2X3), +PS	
207	1-659-880-11	MOTOR FLEXIBLE BOARD	
* 208	1-659-834-11	SUB BOARD	
209	3-909-607-01	SCREW	
⚠210	8-820-010-06	PICK-UP, OPTICAL KSS-521A/K1R	
211	3-931-834-01	SPRING (FEED), PLATE	
212	1-659-881-11	PICK-UP FLEXIBLE BOARD	
213	A-3291-669-A	SHAFT (FEED) ASSY	
M901	X-3371-664-2	MOTOR ASSY (SPINDLE)	
M902	A-3291-674-A	MOTOR ASSY, SLED (SLED)	

www.manualscenter.com

DISC IN SW | DISPLAY

SECTION 6
ELECTRICAL PARTS LIST

NOTE:
- Due to standardization, replacements in the parts list may be different from the parts specified in the diagrams or the components used on the set.
- -XX and -X mean standardized parts, so they may have some difference from the original one.
- RESISTORS
  All resistors are in ohms.
  METAL:Metal-film resistor.
  METAL OXIDE: Metal oxide-film resistor.
  F:nonflammable
- Items marked "*" are not stocked since they are seldom required for routine service. Some delay should be anticipated when ordering these items.
- SEMICONDUCTORS
  In each case, u : μ, for example:
  uA.. : μA.. uPA.. : μPA..
  uPB.. : μPB.. uPC.. : μPC.. uPD.. : μPD..
- CAPACITORS
  uF : μF
- COILS
  uH : μH

The components identified by mark ⚠ or dotted line with mark ⚠ are critical for safety.
Replace only with part number specified.

When indicating parts by reference number, please include the board.

- Abbreviation
  G : German model
  SE : South European model

Ref. No.	Part No.	Description				Remark
*	1-659-836-11	DISC IN SW BOARD				
		**********				
		< SWITCH >				
SW1	1-572-288-21	SWITCH, PUSH (DISC IN)				
SW2	1-572-288-21	SWITCH, PUSH (SELF)				
**********						
		DISPLAY BOARD				
		**********				
*	3-030-879-01	BRACKET (LCD)				
*	3-032-198-01	SHEET (E)				
*	3-032-199-01	SHEET (ESD)				
*	3-032-289-01	SHEET (DIFFUSION 5)				
		< CAPACITOR >				
C503	1-163-251-11	CERAMIC CHIP	100PF	5%	50V	
C504	1-110-501-11	CERAMIC CHIP	0.33uF	10%	16V	
C505	1-163-037-11	CERAMIC CHIP	0.022uF	10%	25V	
		< CONNECTOR >				
CNP502	1-764-423-11	PIN, CONNECTOR 12P				
		< DIODE >				
D501	8-719-069-54	DIODE UDZS-TE17-5.1B				
D503	8-719-914-43	DIODE DAN202K-T-146				
D506	8-719-069-56	DIODE UDZS-TE17-6.2B				
D507	8-719-069-56	DIODE UDZS-TE17-6.2B				
D508	8-719-069-56	DIODE UDZS-TE17-6.2B				
		< IC >				
IC501	8-759-366-34	IC LC75824E				
		< JUMPER RESISTOR >				
JR512	1-216-295-00	SHORT	0			
JR550	1-216-295-00	SHORT	0			
JR551	1-216-295-00	SHORT	0			(GREEN)
JR552	1-216-295-00	SHORT	0			(GREEN)
		< LIQUID CRYSTAL DISPLAY >				
LCD501	1-803-440-11	DISPLAY PANEL, LIQUID CRYSTAL				
		< DIODE >				
LED501	8-719-987-45	LED CL-155Y/PG-CD-TL				
LED502	8-719-987-45	LED CL-155Y/PG-CD-TL				
LED503	8-719-987-45	LED CL-155Y/PG-CD-TL				
LED504	8-719-987-45	LED CL-155Y/PG-CD-TL				
LED505	8-719-987-45	LED CL-155Y/PG-CD-TL				
		< SWITCH >				
LSW511	1-762-141-12	SWITCH, KEY BOARD (WITH LED) (⏏)				(AMBER)
LSW511	1-762-142-12	SWITCH, KEY BOARD (WITH LED) (⏏)				(GREEN)
LSW512	1-762-141-12	SWITCH, KEY BOARD (WITH LED) (AF/TA)				(AMBER)
LSW512	1-762-142-12	SWITCH, KEY BOARD (WITH LED) (AF/TA)				(GREEN)
LSW513	1-762-141-12	SWITCH, KEY BOARD (WITH LED) (PTY)				(AMBER)
LSW513	1-762-142-12	SWITCH, KEY BOARD (WITH LED) (PTY)				(GREEN)
LSW514	1-762-617-21	SWITCH, KEY BOARD (WITH LED) (10)				(AMBER)
LSW514	1-762-619-21	SWITCH, KEY BOARD (WITH LED) (10)				(GREEN)
LSW515	1-762-617-21	SWITCH, KEY BOARD (WITH LED) (9)				(AMBER)
LSW515	1-762-619-21	SWITCH, KEY BOARD (WITH LED) (9)				(GREEN)
LSW516	1-762-617-21	SWITCH, KEY BOARD (WITH LED) (8)				(AMBER)
LSW516	1-762-619-21	SWITCH, KEY BOARD (WITH LED) (8)				(GREEN)
LSW517	1-762-617-21	SWITCH, KEY BOARD (WITH LED) (7)				(AMBER)
LSW517	1-762-619-21	SWITCH, KEY BOARD (WITH LED) (7)				(GREEN)
LSW518	1-762-617-21	SWITCH, KEY BOARD (WITH LED) (6)				(AMBER)
LSW518	1-762-619-21	SWITCH, KEY BOARD (WITH LED) (6)				(GREEN)
LSW519	1-762-617-21	SWITCH, KEY BOARD (WITH LED) (5)				(AMBER)
LSW519	1-762-619-21	SWITCH, KEY BOARD (WITH LED) (5)				(GREEN)
LSW520	1-762-617-21	SWITCH, KEY BOARD (WITH LED) (4)				(AMBER)
LSW520	1-762-619-21	SWITCH, KEY BOARD (WITH LED) (4)				(GREEN)
LSW521	1-762-617-21	SWITCH, KEY BOARD (WITH LED) (3)				(AMBER)

www.manualscenter.com

Ref. No.	Part No.	Description	Remark
LSW521	1-762-619-21	SWITCH, KEY BOARD (WITH LED) (3)	(GREEN)
LSW522	1-762-617-21	SWITCH, KEY BOARD (WITH LED) (OFF)	(AMBER)
LSW522	1-762-619-21	SWITCH, KEY BOARD (WITH LED) (OFF)	(GREEN)
LSW523	1-762-141-12	SWITCH, KEY BOARD (WITH LED) (SOURCE)	(AMBER)
LSW523	1-762-142-12	SWITCH, KEY BOARD (WITH LED) (SOURCE)	(GREEN)
LSW524	1-762-141-12	SWITCH, KEY BOARD (WITH LED) (DSPL)	(AMBER)
LSW524	1-762-142-12	SWITCH, KEY BOARD (WITH LED) (DSPL)	(GREEN)
LSW525	1-762-141-12	SWITCH, KEY BOARD (WITH LED) (SOUND)	(AMBER)
LSW525	1-762-142-12	SWITCH, KEY BOARD (WITH LED) (SOUND)	(GREEN)
LSW526	1-762-141-12	SWITCH, KEY BOARD (WITH LED) (MODE)	(AMBER)
LSW526	1-762-142-12	SWITCH, KEY BOARD (WITH LED) (MODE)	(GREEN)
LSW527	1-762-617-21	SWITCH, KEY BOARD (WITH LED) (SHIFT)	(AMBER)
LSW527	1-762-619-21	SWITCH, KEY BOARD (WITH LED) (SHIFT)	(GREEN)
LSW528	1-762-617-21	SWITCH, KEY BOARD (WITH LED) (1)	(AMBER)
LSW528	1-762-619-21	SWITCH, KEY BOARD (WITH LED) (1)	(GREEN)
LSW529	1-762-617-21	SWITCH, KEY BOARD (WITH LED) (2)	(AMBER)
LSW529	1-762-619-21	SWITCH, KEY BOARD (WITH LED) (2)	(GREEN)
		< PILOT LAMP >	
PL501	1-517-665-21	LAMP, PILOT	
PL502	1-517-665-21	LAMP, PILOT	
		< RESISTOR >	
R502	1-216-053-00	METAL CHIP 1.5K 5%	1/10W
R503	1-216-061-00	METAL CHIP 3.3K 5%	1/10W
R504	1-216-069-00	METAL CHIP 6.8K 5%	1/10W
R505	1-216-081-00	METAL CHIP 22K 5%	1/10W
R511	1-216-043-11	RES-CHIP 560 5%	1/10W
R512	1-216-045-00	METAL CHIP 680 5%	1/10W
R513	1-216-045-00	METAL CHIP 680 5%	1/10W
R514	1-216-049-11	RES-CHIP 1K 5%	1/10W
R515	1-216-053-00	METAL CHIP 1.5K 5%	1/10W
R516	1-216-053-00	METAL CHIP 1.5K 5%	1/10W
R517	1-216-057-00	METAL CHIP 2.2K 5%	1/10W
R518	1-216-061-00	METAL CHIP 3.3K 5%	1/10W
R519	1-216-065-11	RES-CHIP 4.7K 5%	1/10W
R520	1-216-069-00	METAL CHIP 6.8K 5%	1/10W
R521	1-216-043-11	RES-CHIP 560 5%	1/10W
R522	1-216-045-00	METAL CHIP 680 5%	1/10W
R523	1-216-045-00	METAL CHIP 680 5%	1/10W
R524	1-216-049-11	RES-CHIP 1K 5%	1/10W
R525	1-216-053-00	METAL CHIP 1.5K 5%	1/10W
R526	1-216-053-00	METAL CHIP 1.5K 5%	1/10W
R527	1-216-057-00	METAL CHIP 2.2K 5%	1/10W
R528	1-216-061-00	METAL CHIP 3.3K 5%	1/10W
R529	1-216-065-11	RES-CHIP 4.7K 5%	1/10W
R532	1-216-025-11	RES-CHIP 100 5%	1/10W (GREEN)
R532	1-216-029-00	METAL CHIP 150 5%	1/10W (AMBER)
R534	1-216-025-11	RES-CHIP 100 5%	1/10W (GREEN)
R534	1-216-029-00	METAL CHIP 150 5%	1/10W (AMBER)
R536	1-216-033-00	METAL CHIP 220 5%	1/10W (GREEN)
R536	1-216-037-00	METAL CHIP 330 5%	1/10W (AMBER)
R538	1-216-033-00	METAL CHIP 220 5%	1/10W (GREEN)
R538	1-216-037-00	METAL CHIP 330 5%	1/10W (AMBER)
R539	1-216-029-00	METAL CHIP 150 5%	1/10W (GREEN)
R540	1-216-037-00	METAL CHIP 330 5%	1/10W (AMBER)
R541	1-216-029-00	METAL CHIP 150 5%	1/10W (GREEN)
R542	1-216-037-00	METAL CHIP 330 5%	1/10W (AMBER)
R548	1-216-049-11	RES-CHIP 1K 5%	1/10W
R549	1-216-049-11	RES-CHIP 1K 5%	1/10W
R550	1-216-049-11	RES-CHIP 1K 5%	1/10W
R551	1-216-107-00	METAL CHIP 270K 5%	1/10W
R552	1-216-121-11	RES-CHIP 1M 5%	1/10W
R553	1-216-049-11	RES-CHIP 1K 5%	1/10W
R554	1-216-049-11	RES-CHIP 1K 5%	1/10W
R555	1-216-049-11	RES-CHIP 1K 5%	1/10W
R556	1-216-049-11	RES-CHIP 1K 5%	1/10W
R558	1-216-033-00	METAL CHIP 220 5%	1/10W
R562	1-216-025-11	RES-CHIP 100 5%	1/10W (GREEN)
R562	1-216-029-00	METAL CHIP 150 5%	1/10W (AMBER)
		< ROTARY ENCODER >	
RE501	1-475-014-11	ENCODER, ROTARY	
		< SWITCH >	
S501	1-762-937-11	SWITCH, ROTARY (D-BASS)	
S502	1-771-290-11	SWITCH, SLIDE (SEEK/AMS)	

********** ********

www.manualscenter.com

LIMIT SW **LOAD SW** **MAIN**

Ref. No.	Part No.	Description			Remark
*	1-659-835-12	LIMIT SW BOARD			
		**********			
		< SWITCH >			
SW3	1-572-688-11	SWITCH, PUSH (1 KEY) (LIMIT)			
**********					
*	1-659-837-11	LOAD SW BOARD			
		**********			
		< SWITCH >			
SW4	1-572-288-21	SWITCH, PUSH (DOWN)			
**********					
*	A-3294-795-A	MAIN BOARD, COMPLETE			
		**********			
*	3-019-565-01	BRACKET (IC)			
*	3-030-928-01	HEAT SINK (REG)			
*	3-030-991-21	HEAT SINK			
	7-685-793-09	SCREW +PTT 2.6X8 (S)			
	7-685-795-09	SCREW +PTT 2.6X12 (S)			
		< CAPACITOR >			
C101	1-163-133-00	CERAMIC CHIP	470PF	5%	50V
C104	1-164-346-11	CERAMIC CHIP	1uF		16V
C105	1-164-346-11	CERAMIC CHIP	1uF		16V
C106	1-163-037-11	CERAMIC CHIP	0.022uF	10%	25V
C120	1-126-295-11	ELECT	10uF	20%	35V
C121	1-126-295-11	ELECT	10uF	20%	35V
C122	1-164-346-11	CERAMIC CHIP	1uF		16V
C123	1-164-346-11	CERAMIC CHIP	1uF		16V
C126	1-164-346-11	CERAMIC CHIP	1uF		16V
C201	1-163-133-00	CERAMIC CHIP	470PF	5%	50V
C204	1-164-346-11	CERAMIC CHIP	1uF		16V
C205	1-164-346-11	CERAMIC CHIP	1uF		16V
C220	1-126-295-11	ELECT	10uF	20%	35V
C221	1-126-295-11	ELECT	10uF	20%	35V
C222	1-164-346-11	CERAMIC CHIP	1uF		16V
C223	1-164-346-11	CERAMIC CHIP	1uF		16V
C226	1-164-346-11	CERAMIC CHIP	1uF		16V
C401	1-124-234-00	ELECT	22uF	20%	16V
C402	1-164-346-11	CERAMIC CHIP	1uF		16V
C403	1-126-382-11	ELECT	100uF	20%	16V
C404	1-163-809-11	CERAMIC CHIP	0.047uF	10%	25V
C407	1-164-346-11	CERAMIC CHIP	1uF		16V
C408	1-164-346-11	CERAMIC CHIP	1uF		16V
C409	1-126-936-11	ELECT	3300uF	20%	16V
C410	1-124-242-00	ELECT	33uF	20%	25V
C411	1-164-004-11	CERAMIC CHIP	0.1uF	10%	25V
C415	1-124-589-11	ELECT	47uF	20%	16V
C416	1-163-021-11	CERAMIC CHIP	0.01uF	10%	50V
C417	1-124-234-00	ELECT	22uF	20%	16V
C421	1-164-343-11	CERAMIC CHIP	0.056uF	10%	25V

Ref. No.	Part No.	Description			Remark
C499	1-164-346-11	CERAMIC CHIP	1uF		16V
C601	1-163-235-11	CERAMIC CHIP	22PF	5%	50V
C602	1-164-182-11	CERAMIC CHIP	0.0033uF	10%	50V
C603	1-163-021-11	CERAMIC CHIP	0.01uF	10%	50V
C604	1-124-234-00	ELECT	22uF	20%	16V
C605	1-124-234-00	ELECT	22uF	20%	16V
C606	1-124-584-00	ELECT	100uF	20%	10V
C607	1-163-021-11	CERAMIC CHIP	0.01uF	10%	50V
C608	1-126-295-11	ELECT	10uF	20%	35V
C609	1-163-021-11	CERAMIC CHIP	0.01uF	10%	50V
C610	1-163-009-11	CERAMIC CHIP	0.001uF	10%	50V
C611	1-163-019-00	CERAMIC CHIP	0.0068uF	10%	50V
C612	1-164-344-11	CERAMIC CHIP	0.068uF	10%	25V
C613	1-163-019-00	CERAMIC CHIP	0.0068uF	10%	50V
C614	1-164-004-11	CERAMIC CHIP	0.1uF	10%	25V
C615	1-162-587-11	CERAMIC CHIP	0.039uF	10%	25V
C617	1-163-251-11	CERAMIC CHIP	100PF	5%	50V
C618	1-163-251-11	CERAMIC CHIP	100PF	5%	50V
C619	1-163-021-11	CERAMIC CHIP	0.01uF	10%	50V
C621	1-163-038-00	CERAMIC CHIP	0.1uF		25V
C622	1-126-295-11	ELECT	10uF	20%	35V
C623	1-163-009-11	CERAMIC CHIP	0.001uF	10%	50V
C624	1-163-251-11	CERAMIC CHIP	100PF	5%	50V
C625	1-163-251-11	CERAMIC CHIP	100PF	5%	50V
C626	1-163-038-00	CERAMIC CHIP	0.1uF		25V
C628	1-163-038-00	CERAMIC CHIP	0.1uF		25V
C629	1-163-809-11	CERAMIC CHIP	0.047uF	10%	25V
C630	1-164-005-11	CERAMIC CHIP	0.47uF		25V
C631	1-163-227-11	CERAMIC CHIP	10PF	0.5PF	50V
C632	1-163-009-11	CERAMIC CHIP	0.001uF	10%	50V
C636	1-164-161-11	CERAMIC CHIP	0.0022uF	10%	100V
C637	1-163-038-00	CERAMIC CHIP	0.1uF		25V
C638	1-163-038-00	CERAMIC CHIP	0.1uF		25V
C639	1-163-009-11	CERAMIC CHIP	0.001uF	10%	50V
C640	1-163-006-11	CERAMIC CHIP	560PF	10%	50V
C641	1-163-237-11	CERAMIC CHIP	27PF	5%	50V
C642	1-163-237-11	CERAMIC CHIP	27PF	5%	50V
C643	1-163-263-11	CERAMIC CHIP	330PF	5%	50V
C644	1-163-038-00	CERAMIC CHIP	0.1uF		25V
C645	1-124-589-11	ELECT	47uF	20%	16V
C646	1-124-257-00	ELECT	2.2uF	20%	50V
C647	1-163-021-11	CERAMIC CHIP	0.01uF	10%	50V
C648	1-163-251-11	CERAMIC CHIP	100PF	5%	50V
C649	1-163-021-11	CERAMIC CHIP	0.01uF	10%	50V
C651	1-163-009-11	CERAMIC CHIP	0.001uF	10%	50V
C653	1-163-251-11	CERAMIC CHIP	100PF	5%	50V
C654	1-163-251-11	CERAMIC CHIP	100PF	5%	50V
C657	1-163-263-11	CERAMIC CHIP	330PF	5%	50V
C658	1-164-004-11	CERAMIC CHIP	0.1uF	10%	25V
C660	1-163-251-11	CERAMIC CHIP	100PF	5%	50V
C663	1-163-037-11	CERAMIC CHIP	0.022uF	10%	25V
C667	1-163-251-11	CERAMIC CHIP	100PF	5%	50V
C668	1-163-021-11	CERAMIC CHIP	0.01uF	10%	50V

www.manualscenter.com

Ref. No.	Part No.	Description			Remark
C671	1-163-251-11	CERAMIC CHIP	100PF	5%	50V
C692	1-164-004-11	CERAMIC CHIP	0.1uF	10%	25V
C693	1-164-004-11	CERAMIC CHIP	0.1uF	10%	25V
C694	1-164-004-11	CERAMIC CHIP	0.1uF	10%	25V
C703	1-126-295-11	ELECT	10uF	20%	35V
C704	1-164-004-11	CERAMIC CHIP	0.1uF	10%	25V
C705	1-163-009-11	CERAMIC CHIP	0.001uF	10%	50V
C707	1-162-970-11	CERAMIC CHIP	0.01uF	10%	25V
C708	1-163-235-11	CERAMIC CHIP	22PF	5%	50V
C709	1-163-235-11	CERAMIC CHIP	22PF	5%	50V
C710	1-126-295-11	ELECT	10uF	20%	35V
C718	1-163-239-11	CERAMIC CHIP	33PF	5%	50V
C780	1-163-021-11	CERAMIC CHIP	0.01uF	10%	50V
C781	1-163-021-11	CERAMIC CHIP	0.01uF	10%	50V
C799	1-163-009-11	CERAMIC CHIP	0.001uF	10%	50V
C801	1-164-004-11	CERAMIC CHIP	0.1uF	10%	25V
C802	1-163-038-00	CERAMIC CHIP	0.1uF		25V
C811	1-163-235-11	CERAMIC CHIP	22PF	5%	50V
C812	1-163-235-11	CERAMIC CHIP	22PF	5%	50V
C813	1-163-038-00	CERAMIC CHIP	0.1uF		25V
C814	1-163-809-11	CERAMIC CHIP	0.047uF	10%	25V
C816	1-163-038-00	CERAMIC CHIP	0.1uF		25V
C817	1-163-038-00	CERAMIC CHIP	0.1uF		25V
C818	1-164-004-11	CERAMIC CHIP	0.1uF	10%	25V
C903	1-124-465-00	ELECT	0.47uF	20%	50V
C904	1-128-057-11	ELECT	330uF	20%	6.3V
C910	1-163-021-11	CERAMIC CHIP	0.01uF	10%	50V
C912	1-164-004-11	CERAMIC CHIP	0.1uF	10%	25V
C913	1-126-160-11	ELECT	1uF	20%	50V
C914	1-125-701-11	DOUBLE LAYERS	0.047F		5.5V
C917	1-164-004-11	CERAMIC CHIP	0.1uF	10%	25V
C920	1-163-038-00	CERAMIC CHIP	0.1uF		25V
C921	1-124-465-00	ELECT	0.47uF	20%	50V
C922	1-164-004-11	CERAMIC CHIP	0.1uF	10%	25V
C923	1-124-465-00	ELECT	0.47uF	20%	50V
C925	1-163-010-11	CERAMIC CHIP	0.0012uF	10%	50V
C926	1-163-038-00	CERAMIC CHIP	0.1uF		25V
C930	1-164-004-11	CERAMIC CHIP	0.1uF	10%	25V
C931	1-164-004-11	CERAMIC CHIP	0.1uF	10%	25V
C932	1-164-156-11	CERAMIC CHIP	0.1uF		25V
C934	1-163-021-11	CERAMIC CHIP	0.01uF	10%	50V
C940	1-124-464-11	ELECT	0.22uF	20%	50V
C950	1-163-021-11	CERAMIC CHIP	0.01uF	10%	50V
		< JACK >			
CNJ600	1-764-808-21	JACK (ANTENNA)			
CNP802	1-566-822-41	JACK (REMOTE IN)			
		< CONNECTOR >			
CNP501	1-774-701-11	PIN, CONNECTOR 16P			
CNP700	1-764-617-12	PIN, CONNECTOR (PC BOARD) 30P			
CNP800	1-764-422-11	PLUG, CONNECTOR 12P			

Ref. No.	Part No.	Description		Remark
		< DIODE >		
D402	8-719-109-71	DIODE	MTZJ-T-77-3.9A	
D403	8-719-914-43	DIODE	DAN202K-T-146	
D404	8-719-200-82	DIODE	11ES2-TA1B	
D405	8-719-200-82	DIODE	11ES2-TA1B	
D406	8-719-200-82	DIODE	11ES2-TA1B	
D407	8-719-200-82	DIODE	11ES2-TA1B	
D408	8-719-200-82	DIODE	11ES2-TA1B	
D409	8-719-200-82	DIODE	11ES2-TA1B	
D410	8-719-200-82	DIODE	11ES2-TA1B	
D411	8-719-200-82	DIODE	11ES2-TA1B	
D601	8-719-069-55	DIODE	UDZS-TE17-5.6B	
D603	8-719-987-69	DIODE	DAN217-T146	
D604	8-719-058-24	DIODE	RB501V-40TE-17	
D702	8-719-991-33	DIODE	1SS133T-77	
D807	8-719-069-57	DIODE	UDZS-TE17-6.8B	
D823	8-719-069-57	DIODE	UDZS-TE17-6.8B	
D824	8-719-069-57	DIODE	UDZS-TE17-6.8B	
D856	8-719-069-57	DIODE	UDZS-TE17-6.8B	
D857	8-719-069-57	DIODE	UDZS-TE17-6.8B	
D858	8-719-069-57	DIODE	UDZS-TE17-6.8B	
D859	8-719-069-57	DIODE	UDZS-TE17-6.8B	
D860	8-719-069-57	DIODE	UDZS-TE17-6.8B	
D861	8-719-069-57	DIODE	UDZS-TE17-6.8B	
D862	8-719-069-57	DIODE	UDZS-TE17-6.8B	
D863	8-719-069-57	DIODE	UDZS-TE17-6.8B	
D864	8-719-069-57	DIODE	UDZS-TE17-6.8B	
D865	8-719-069-57	DIODE	UDZS-TE17-6.8B	
D870	8-719-069-54	DIODE	UDZS-TE17-5.1B	
D881	8-719-914-43	DIODE	DAN202K-T-146	
D901	8-719-200-82	DIODE	11ES2-TA1B	
D902	8-719-200-82	DIODE	11ES2-TA1B	
D903	8-719-049-38	DIODE	1N5404TU	
D904	8-719-200-82	DIODE	11ES2-TA1B	
D909	8-719-069-57	DIODE	UDZS-TE17-6.8B	
D910	8-719-978-69	DIODE	UDZ-TE-17-16B	
D912	8-719-923-60	DIODE	MTZJ-T-77-9.1A	
D913	8-719-109-89	DIODE	MTZJ-T-77-5.6B	
D914	8-719-069-57	DIODE	UDZS-TE17-6.8B	
D915	8-719-923-60	DIODE	MTZJ-T-77-9.1A	
D916	8-719-921-80	DIODE	MTZJ-T-77-11B	
D918	8-719-914-44	DIODE	DAP202K-T-146	
D919	8-719-914-43	DIODE	DAN202K-T-146	
D920	8-719-978-69	DIODE	UDZ-TE-17-16B	
D924	8-719-200-82	DIODE	11ES2-TA1B	
D930	8-719-914-43	DIODE	DAN202K-T-146	
D940	8-719-978-69	DIODE	UDZ-TE-17-16B	
		< IC >		
IC200	8-759-486-44	IC	TDA7386	
IC401	8-759-572-10	IC	TDA7462D013TR	
IC601	8-759-572-11	IC	TDA7427AD1TR	

www.manualscenter.com

MAIN

Ref. No.	Part No.	Description	Remark
IC602	8-759-492-59	IC SAA6588T-118	
IC603	8-759-909-71	IC BA4558F-E2	
IC702	8-759-464-81	IC PCM1717E-ST2	
IC801	8-759-643-86	IC MB90574APMT-G-238-BND	
IC901	8-759-572-12	IC BA4903ST-V5	
IC902	8-759-363-81	IC XC61AN4002PR	
		< JUMPER RESISTOR >	
JR405	1-216-295-00	SHORT 0	
JR409	1-216-295-00	SHORT 0	
JR603	1-216-295-00	SHORT 0	
JR609	1-216-295-00	SHORT 0	
JR611	1-216-295-00	SHORT 0	
JR613	1-216-295-00	SHORT 0	
JR615	1-216-295-00	SHORT 0	
JR616	1-216-295-00	SHORT 0	
JR617	1-216-295-00	SHORT 0	
JR618	1-216-295-00	SHORT 0	
JR620	1-216-295-00	SHORT 0	
JR621	1-216-295-00	SHORT 0	
JR622	1-216-295-00	SHORT 0	
JR623	1-216-295-00	SHORT 0	
JR624	1-216-295-00	SHORT 0	
JR702	1-216-295-00	SHORT 0	
JR705	1-216-295-00	SHORT 0	
JR710	1-216-295-00	SHORT 0	
JR720	1-216-295-00	SHORT 0	
JR722	1-216-295-00	SHORT 0	
JR765	1-216-295-00	SHORT 0	
		< DIODE >	
JW29	8-719-050-84	DIODE RB441QT-77	
		< COIL >	
L601	1-410-513-11	INDUCTOR 22uH	
L603	1-414-142-11	INDUCTOR 1uH	
L611	1-412-924-41	INDUCTOR 56nH	
L901	1-416-539-11	INDUCTOR 370uH	
		< TRANSISTOR >	
Q101	8-729-920-21	TRANSISTOR DTC314TK-T-146	
Q110	8-729-920-31	TRANSISTOR DTC343TK-T-146	
Q111	8-729-920-31	TRANSISTOR DTC343TK-T-146	
Q201	8-729-920-21	TRANSISTOR DTC314TK-T-146	
Q210	8-729-920-31	TRANSISTOR DTC343TK-T-146	
Q211	8-729-920-31	TRANSISTOR DTC343TK-T-146	
Q401	8-729-027-31	TRANSISTOR DTA124EKA-T146	
Q402	8-729-901-00	TRANSISTOR DTC124EKA-T146	
Q603	8-729-030-51	TRANSISTOR 2SA1515S-R-TP	
Q604	8-729-027-31	TRANSISTOR DTA124EKA-T146	
Q605	8-729-901-00	TRANSISTOR DTC124EKA-T146	
Q609	8-729-901-00	TRANSISTOR DTC124EKA-T146	

Ref. No.	Part No.	Description	Remark
Q610	8-729-216-22	TRANSISTOR 2SA1037K-T-146-S	
Q612	8-729-216-22	TRANSISTOR 2SA1037K-T-146-S	
Q613	8-729-120-28	TRANSISTOR 2SC2412K-T-146-R	
Q614	8-729-120-28	TRANSISTOR 2SC2412K-T-146-R	
Q615	8-729-901-00	TRANSISTOR DTC124EKA-T146	
Q618	8-729-120-28	TRANSISTOR 2SC2412K-T-146-R	
Q804	8-729-901-00	TRANSISTOR DTC124EKA-T146	
Q901	8-729-027-31	TRANSISTOR DTA124EKA-T146	
Q902	8-729-901-00	TRANSISTOR DTC124EKA-T146	
Q903	8-729-019-00	TRANSISTOR 2SD2394-G	
Q904	8-729-019-00	TRANSISTOR 2SD2394-G	
Q905	8-729-900-53	TRANSISTOR DTC114EKA-T146	
Q906	8-729-901-00	TRANSISTOR DTC124EKA-T146	
Q907	8-729-027-31	TRANSISTOR DTA124EKA-T146	
Q908	8-729-901-00	TRANSISTOR DTC124EKA-T146	
Q909	8-729-015-11	TRANSISTOR 2SD1802FAST-TL	
Q910	8-729-027-31	TRANSISTOR DTA124EKA-T146	
Q911	8-729-901-00	TRANSISTOR DTC124EKA-T146	
Q912	8-729-019-00	TRANSISTOR 2SD2394-G	
Q913	8-729-027-31	TRANSISTOR DTA124EKA-T146	
Q914	8-729-027-31	TRANSISTOR DTA124EKA-T146	
Q915	8-729-027-31	TRANSISTOR DTA124EKA-T146	
Q916	8-729-120-28	TRANSISTOR 2SC2412K-T-146-R	
Q917	8-729-120-28	TRANSISTOR 2SC2412K-T-146-R	
Q918	8-729-120-28	TRANSISTOR 2SC2412K-T-146-R	
Q919	8-729-901-00	TRANSISTOR DTC124EKA-T146	
Q924	8-729-903-46	TRANSISTOR 2SB1132-T100-QR	
Q925	8-729-901-00	TRANSISTOR DTC124EKA-T146	
Q940	8-729-120-28	TRANSISTOR 2SC2412K-T-146-R	
		< RESISTOR >	
R101	1-216-057-00	METAL CHIP 2.2K 5% 1/10W	
R102	1-216-073-00	METAL CHIP 10K 5% 1/10W	
R111	1-216-065-11	RES-CHIP 4.7K 5% 1/10W	
R112	1-216-049-11	RES-CHIP 1K 5% 1/10W	
R113	1-216-065-11	RES-CHIP 4.7K 5% 1/10W	
R114	1-216-049-11	RES-CHIP 1K 5% 1/10W	
R115	1-216-065-11	RES-CHIP 4.7K 5% 1/10W	
R116	1-216-065-11	RES-CHIP 4.7K 5% 1/10W	
R117	1-216-129-00	METAL CHIP 2.2M 5% 1/10W	
R118	1-216-129-00	METAL CHIP 2.2M 5% 1/10W	
R123	1-216-089-11	RES-CHIP 47K 5% 1/10W	
R125	1-216-089-11	RES-CHIP 47K 5% 1/10W	
R126	1-216-095-00	METAL CHIP 82K 5% 1/10W	
R128	1-216-089-11	RES-CHIP 47K 5% 1/10W	
R129	1-216-089-11	RES-CHIP 47K 5% 1/10W	
R201	1-216-057-00	METAL CHIP 2.2K 5% 1/10W	
R202	1-216-073-00	METAL CHIP 10K 5% 1/10W	
R211	1-216-065-11	RES-CHIP 4.7K 5% 1/10W	
R212	1-216-049-11	RES-CHIP 1K 5% 1/10W	
R213	1-216-065-11	RES-CHIP 4.7K 5% 1/10W	
R214	1-216-049-11	RES-CHIP 1K 5% 1/10W	
R215	1-216-065-11	RES-CHIP 4.7K 5% 1/10W	

www.manualscenter.com

Ref. No.	Part No.	Description			Remark
R216	1-216-065-11	RES-CHIP	4.7K	5%	1/10W
R217	1-216-129-00	METAL CHIP	2.2M	5%	1/10W
R218	1-216-129-00	METAL CHIP	2.2M	5%	1/10W
R223	1-216-089-11	RES-CHIP	47K	5%	1/10W
R226	1-216-095-00	METAL CHIP	82K	5%	1/10W
R228	1-216-089-11	RES-CHIP	47K	5%	1/10W
R229	1-216-089-11	RES-CHIP	47K	5%	1/10W
R401	1-216-049-11	RES-CHIP	1K	5%	1/10W
R402	1-216-065-11	RES-CHIP	4.7K	5%	1/10W
R403	1-216-113-00	METAL CHIP	470K	5%	1/10W
R404	1-216-295-00	SHORT	0		
R405	1-216-295-00	SHORT	0		
R408	1-216-073-00	METAL CHIP	10K	5%	1/10W
R417	1-216-061-00	METAL CHIP	3.3K	5%	1/10W
R602	1-216-025-11	RES-CHIP	100	5%	1/10W
R603	1-216-083-00	METAL CHIP	27K	5%	1/10W
R605	1-216-067-00	METAL CHIP	5.6K	5%	1/10W
R606	1-216-073-00	METAL CHIP	10K	5%	1/10W
R607	1-216-097-11	RES-CHIP	100K	5%	1/10W
R608	1-216-025-11	RES-CHIP	100	5%	1/10W
R609	1-216-081-00	METAL CHIP	22K	5%	1/10W
R611	1-216-025-11	RES-CHIP	100	5%	1/10W
R612	1-216-073-00	METAL CHIP	10K	5%	1/10W
R613	1-216-073-00	METAL CHIP	10K	5%	1/10W
R614	1-216-295-00	SHORT	0		
R615	1-216-295-00	SHORT	0		
R616	1-216-081-00	METAL CHIP	22K	5%	1/10W
R617	1-216-025-11	RES-CHIP	100	5%	1/10W
R619	1-216-061-00	METAL CHIP	3.3K	5%	1/10W
R621	1-216-057-00	METAL CHIP	2.2K	5%	1/10W
R623	1-216-049-11	RES-CHIP	1K	5%	1/10W
R624	1-216-049-11	RES-CHIP	1K	5%	1/10W
R625	1-216-037-00	METAL CHIP	330	5%	1/10W
R626	1-216-049-11	RES-CHIP	1K	5%	1/10W
R627	1-216-113-00	METAL CHIP	470K	5%	1/10W
R628	1-216-057-00	METAL CHIP	2.2K	5%	1/10W
R630	1-216-097-11	RES-CHIP	100K	5%	1/10W
R631	1-216-097-11	RES-CHIP	100K	5%	1/10W
R632	1-216-057-00	METAL CHIP	2.2K	5%	1/10W
R633	1-216-073-00	METAL CHIP	10K	5%	1/10W
R634	1-216-073-00	METAL CHIP	10K	5%	1/10W
R635	1-216-009-11	RES-CHIP	22	5%	1/10W
R636	1-216-121-11	RES-CHIP	1M	5%	1/10W
R637	1-216-057-00	METAL CHIP	2.2K	5%	1/10W
R638	1-216-097-11	RES-CHIP	100K	5%	1/10W
R639	1-216-077-11	RES-CHIP	15K	5%	1/10W
R640	1-216-113-00	METAL CHIP	470K	5%	1/10W
R641	1-216-097-11	RES-CHIP	100K	5%	1/10W
R642	1-216-065-11	RES-CHIP	4.7K	5%	1/10W
R643	1-216-065-11	RES-CHIP	4.7K	5%	1/10W
R644	1-216-057-00	METAL CHIP	2.2K	5%	1/10W
R645	1-216-057-00	METAL CHIP	2.2K	5%	1/10W
R646	1-216-073-00	METAL CHIP	10K	5%	1/10W

Ref. No.	Part No.	Description			Remark
R647	1-216-057-00	METAL CHIP	2.2K	5%	1/10W
R648	1-216-295-00	SHORT	0		
R649	1-216-097-11	RES-CHIP	100K	5%	1/10W
R651	1-216-025-11	RES-CHIP	100	5%	1/10W
R694	1-216-017-11	RES-CHIP	47	5%	1/10W
R695	1-216-097-11	RES-CHIP	100K	5%	1/10W
R699	1-216-075-00	METAL CHIP	12K	5%	1/10W
R701	1-216-025-11	RES-CHIP	100	5%	1/10W
R702	1-216-025-11	RES-CHIP	100	5%	1/10W
R703	1-216-025-11	RES-CHIP	100	5%	1/10W
R705	1-216-033-00	METAL CHIP	220	5%	1/10W
R708	1-216-037-00	METAL CHIP	330	5%	1/10W
R710	1-216-027-00	METAL CHIP	120	5%	1/10W
R723	1-216-065-11	RES-CHIP	4.7K	5%	1/10W
R802	1-216-049-11	RES-CHIP	1K	5%	1/10W
R805	1-216-097-11	RES-CHIP	100K	5%	1/10W
R806	1-216-049-11	RES-CHIP	1K	5%	1/10W
R807	1-216-049-11	RES-CHIP	1K	5%	1/10W
R808	1-216-049-11	RES-CHIP	1K	5%	1/10W
R809	1-216-025-11	RES-CHIP	100	5%	1/10W
R810	1-216-025-11	RES-CHIP	100	5%	1/10W
R812	1-216-097-11	RES-CHIP	100K	5%	1/10W
R813	1-216-049-11	RES-CHIP	1K	5%	1/10W
R814	1-216-049-11	RES-CHIP	1K	5%	1/10W
R816	1-216-025-11	RES-CHIP	100	5%	1/10W
R821	1-216-097-11	RES-CHIP	100K	5%	1/10W
R822	1-216-057-00	METAL CHIP	2.2K	5%	1/10W
R823	1-216-057-00	METAL CHIP	2.2K	5%	1/10W
R825	1-216-097-11	RES-CHIP	100K	5%	1/10W
R826	1-216-097-11	RES-CHIP	100K	5%	1/10W
R827	1-216-105-11	RES-CHIP	220K	5%	1/10W
R828	1-216-097-11	RES-CHIP	100K	5%	1/10W
R829	1-216-073-00	METAL CHIP	10K	5%	1/10W
R830	1-216-073-00	METAL CHIP	10K	5%	1/10W
R831	1-216-073-00	METAL CHIP	10K	5%	1/10W
R832	1-216-097-11	RES-CHIP	100K	5%	1/10W
R833	1-216-057-00	METAL CHIP	2.2K	5%	1/10W
R834	1-216-097-11	RES-CHIP	100K	5%	1/10W
R835	1-216-089-11	RES-CHIP	47K	5%	1/10W
R839	1-216-073-00	METAL CHIP	10K	5%	1/10W
R842	1-216-097-11	RES-CHIP	100K	5%	1/10W
R843	1-216-073-00	METAL CHIP	10K	5%	1/10W
R844	1-216-025-11	RES-CHIP	100	5%	1/10W
R845	1-216-025-11	RES-CHIP	100	5%	1/10W
R846	1-216-097-11	RES-CHIP	100K	5%	1/10W
R847	1-216-097-11	RES-CHIP	100K	5%	1/10W
R848	1-216-097-11	RES-CHIP	100K	5%	1/10W
R850	1-216-097-11	RES-CHIP	100K	5%	1/10W
R851	1-216-097-11	RES-CHIP	100K	5%	1/10W
R856	1-216-025-11	RES-CHIP	100	5%	1/10W
R858	1-216-295-00	SHORT	0		
R859	1-216-065-11	RES-CHIP	4.7K	5%	1/10W
R860	1-216-097-11	RES-CHIP	100K	5%	1/10W

www.manualscenter.com

MAIN **SERVO**

Ref. No.	Part No.	Description			Remark
R861	1-216-105-11	RES-CHIP	220K	5%	1/10W
R862	1-216-105-11	RES-CHIP	220K	5%	1/10W
R863	1-216-049-11	RES-CHIP	1K	5%	1/10W
R865	1-216-097-11	RES-CHIP	100K	5%	1/10W
R866	1-216-097-11	RES-CHIP	100K	5%	1/10W
R868	1-216-049-11	RES-CHIP	1K	5%	1/10W
R869	1-216-097-11	RES-CHIP	100K	5%	1/10W
R870	1-216-025-11	RES-CHIP	100	5%	1/10W
R871	1-216-025-11	RES-CHIP	100	5%	1/10W
R898	1-216-097-11	RES-CHIP	100K	5%	1/10W
R899	1-216-097-11	RES-CHIP	100K	5%	1/10W
R902	1-216-049-11	RES-CHIP	1K	5%	1/10W
R903	1-216-041-00	METAL CHIP	470	5%	1/10W
R904	1-216-071-00	METAL CHIP	8.2K	5%	1/10W
R906	1-216-097-11	RES-CHIP	100K	5%	1/10W
R907	1-216-057-00	METAL CHIP	2.2K	5%	1/10W
R908	1-216-033-00	METAL CHIP	220	5%	1/10W
R909	1-216-041-00	METAL CHIP	470	5%	1/10W
R910	1-216-041-00	METAL CHIP	470	5%	1/10W
R911	1-216-041-00	METAL CHIP	470	5%	1/10W
R915	1-216-081-00	METAL CHIP	22K	5%	1/10W
R917	1-216-085-00	METAL CHIP	33K	5%	1/10W
R918	1-216-073-00	METAL CHIP	10K	5%	1/10W
R919	1-216-073-00	METAL CHIP	10K	5%	1/10W
R920	1-216-097-11	RES-CHIP	100K	5%	1/10W
R921	1-216-295-00	SHORT	0		
R922	1-216-075-00	METAL CHIP	12K	5%	1/10W
R923	1-216-105-11	RES-CHIP	220K	5%	1/10W
R924	1-216-089-11	RES-CHIP	47K	5%	1/10W
R925	1-216-097-11	RES-CHIP	100K	5%	1/10W
R928	1-216-041-00	METAL CHIP	470	5%	1/10W
R933	1-216-025-11	RES-CHIP	100	5%	1/10W
R936	1-216-059-00	METAL CHIP	2.7K	5%	1/10W
R937	1-216-097-11	RES-CHIP	100K	5%	1/10W
R940	1-216-057-00	METAL CHIP	2.2K	5%	1/10W
R999	1-216-097-11	RES-CHIP	100K	5%	1/10W
		< VARIABLE RESISTOR >			
RV801	1-241-788-11	RES, ADJ, CARBON 100K			
		< SWITCH >			
S900	1-692-431-21	SWITCH, TACTILE (RESET)			
		< TUNER >			
TU601	1-693-440-12	TUNER UNIT			
		< VIBRATOR >			
X601	1-781-246-21	VIBRATOR, CRYSTAL (10.25MHz)			
X602	1-579-242-41	VIBRATOR, CRYSTAL (4.3MHz)			
X700	1-579-345-11	VIBRATOR, CERAMIC (16.9344MHz)			
X800	1-767-833-21	VIBRATOR, CERAMIC (3.68MHz)			
X801	1-567-098-41	VIBRATOR, CRYSTAL (32kHz)			

****

Ref. No.	Part No.	Description			Remark
*	A-3309-227-A	SERVO BOARD, COMPLETE			
		**********			
		< CAPACITOR >			
C1	1-107-823-11	CERAMIC CHIP	0.47uF	10%	16V
C2	1-163-021-11	CERAMIC CHIP	0.01uF	10%	50V
C3	1-135-145-11	TANTALUM CHIP	0.47uF	10%	35V
C4	1-163-251-11	CERAMIC CHIP	100PF	5%	50V
C5	1-164-182-11	CERAMIC CHIP	0.0033uF	10%	50V
C6	1-163-011-11	CERAMIC CHIP	0.0015uF	10%	50V
C7	1-163-809-11	CERAMIC CHIP	0.047uF	10%	25V
C9	1-164-004-11	CERAMIC CHIP	0.1uF	10%	25V
C10	1-126-206-11	ELECT CHIP	100uF	20%	6.3V
C11	1-135-259-11	TANTAL. CHIP	10uF	20%	6.3V
C12	1-163-227-11	CERAMIC CHIP	10PF	0.5PF	50V
C13	1-163-021-11	CERAMIC CHIP	0.01uF	10%	50V
C14	1-163-989-11	CERAMIC CHIP	0.033uF	10%	25V
C15	1-163-021-11	CERAMIC CHIP	0.01uF	10%	50V
C16	1-163-989-11	CERAMIC CHIP	0.033uF	10%	25V
C17	1-164-004-11	CERAMIC CHIP	0.1uF	10%	25V
C18	1-164-004-11	CERAMIC CHIP	0.1uF	10%	25V
C19	1-163-037-11	CERAMIC CHIP	0.022uF	10%	25V
C20	1-107-823-11	CERAMIC CHIP	0.47uF	10%	16V
C21	1-163-809-11	CERAMIC CHIP	0.047uF	10%	25V
C22	1-163-251-11	CERAMIC CHIP	100PF	5%	50V
C23	1-135-259-11	TANTAL. CHIP	10uF	20%	6.3V
C24	1-163-259-11	CERAMIC CHIP	220PF	5%	50V
C25	1-107-823-11	CERAMIC CHIP	0.47uF	10%	16V
C26	1-164-004-11	CERAMIC CHIP	0.1uF	10%	25V
C27	1-164-004-11	CERAMIC CHIP	0.1uF	10%	25V
C28	1-163-023-00	CERAMIC CHIP	0.015uF	5%	50V
C29	1-164-004-11	CERAMIC CHIP	0.1uF	10%	25V
C30	1-126-603-11	ELECT CHIP	4.7uF	20%	35V
C31	1-163-021-11	CERAMIC CHIP	0.01uF	10%	50V
C32	1-163-023-00	CERAMIC CHIP	0.015uF	5%	50V
C33	1-124-779-00	ELECT CHIP	10uF	20%	16V
C34	1-109-982-11	CERAMIC CHIP	1uF	10%	10V
C35	1-163-021-11	CERAMIC CHIP	0.01uF	10%	50V
C36	1-164-004-11	CERAMIC CHIP	0.1uF	10%	25V
C37	1-164-004-11	CERAMIC CHIP	0.1uF	10%	25V
C38	1-164-004-11	CERAMIC CHIP	0.1uF	10%	25V
C39	1-126-204-11	ELECT CHIP	47uF	20%	16V
C40	1-164-004-11	CERAMIC CHIP	0.1uF	10%	25V
		< CONNECTOR >			
CN1	1-764-616-12	HOUSING, CONNECTOR (PC BOARD) 30P			
CN2	1-565-728-51	CONNECTOR, FPC 17P			
CN3	1-770-347-21	CONNECTOR, FPC 6P			
		< IC >			
IC1	8-752-372-94	IC CXD2507AQ			
IC2	8-752-074-34	IC CXA1782BQ			
IC3	8-759-354-16	IC BA6796FP-T1			

www.manualscenter.com

Ref. No.	Part No.	Description		Remark
		< JUMPER RESISTOR >		
JR1	1-216-296-00	SHORT	0	
JR2	1-216-296-00	SHORT	0	
JR3	1-216-296-00	SHORT	0	
JR4	1-216-296-00	SHORT	0	
JR5	1-216-296-00	SHORT	0	
JR6	1-216-296-00	SHORT	0	
JR7	1-216-296-00	SHORT	0	
JR8	1-216-296-00	SHORT	0	
JR9	1-216-296-00	SHORT	0	
JR10	1-216-296-00	SHORT	0	
JR11	1-216-296-00	SHORT	0	
JR12	1-216-296-00	SHORT	0	
JR13	1-216-296-00	SHORT	0	
JR14	1-216-296-00	SHORT	0	
JR15	1-216-296-00	SHORT	0	
JR16	1-216-296-00	SHORT	0	
JR17	1-216-296-00	SHORT	0	
JR18	1-216-296-00	SHORT	0	
JR19	1-216-296-00	SHORT	0	
JR20	1-216-296-00	SHORT	0	
JR21	1-216-296-00	SHORT	0	
JR22	1-216-296-00	SHORT	0	
JR23	1-216-296-00	SHORT	0	
JR24	1-216-296-00	SHORT	0	
JR25	1-216-296-00	SHORT	0	
JR26	1-216-296-00	SHORT	0	
JR27	1-216-296-00	SHORT	0	
JR28	1-216-296-00	SHORT	0	
JR29	1-216-296-00	SHORT	0	
JR30	1-216-296-00	SHORT	0	
JR31	1-216-296-00	SHORT	0	
JR32	1-216-296-00	SHORT	0	
JR33	1-216-296-00	SHORT	0	
JR34	1-216-296-00	SHORT	0	
JR35	1-216-296-00	SHORT	0	
JR36	1-216-296-00	SHORT	0	
JR37	1-216-296-00	SHORT	0	
JR38	1-216-296-00	SHORT	0	
JR39	1-216-296-00	SHORT	0	
JR40	1-216-296-00	SHORT	0	
JR41	1-216-296-00	SHORT	0	
JR43	1-216-296-00	SHORT	0	
JR44	1-216-296-00	SHORT	0	
JR45	1-216-296-00	SHORT	0	
JR46	1-216-296-00	SHORT	0	
		< COIL >		
L1	1-412-058-11	INDUCTOR CHIP	10uH	
L2	1-412-058-11	INDUCTOR CHIP	10uH	
L3	1-412-058-11	INDUCTOR CHIP	10uH	

Ref. No.	Part No.	Description				Remark
		< TRANSISTOR >				
Q1	8-729-904-60	TRANSISTOR	DTB113ZK-T-146			
Q2	8-729-904-86	TRANSISTOR	2SB1197K-T-146-Q			
		< RESISTOR >				
R1	1-216-073-00	METAL CHIP	10K	5%	1/10W	
R2	1-216-097-11	RES-CHIP	100K	5%	1/10W	
R3	1-216-121-11	RES-CHIP	1M	5%	1/10W	
R4	1-216-061-00	METAL CHIP	3.3K	5%	1/10W	
R5	1-216-061-00	METAL CHIP	3.3K	5%	1/10W	
R6	1-216-073-00	METAL CHIP	10K	5%	1/10W	
R7	1-216-009-11	RES-CHIP	22	5%	1/10W	
R8	1-216-119-00	METAL CHIP	820K	5%	1/10W	
R9	1-216-119-00	METAL CHIP	820K	5%	1/10W	
R10	1-216-073-00	METAL CHIP	10K	5%	1/10W	
R11	1-216-073-00	METAL CHIP	10K	5%	1/10W	
R14	1-216-085-00	METAL CHIP	33K	5%	1/10W	
R15	1-216-085-00	METAL CHIP	33K	5%	1/10W	
R16	1-216-077-11	RES-CHIP	15K	5%	1/10W	
R17	1-216-081-00	METAL CHIP	22K	5%	1/10W	
R19	1-216-079-00	METAL CHIP	18K	5%	1/10W	
R20	1-216-105-11	RES-CHIP	220K	5%	1/10W	
R21	1-216-105-11	RES-CHIP	220K	5%	1/10W	
R22	1-216-085-00	METAL CHIP	33K	5%	1/10W	
R23	1-216-121-11	RES-CHIP	1M	5%	1/10W	
R24	1-216-073-00	METAL CHIP	10K	5%	1/10W	
R27	1-216-295-00	SHORT	0			
R28	1-216-101-00	METAL CHIP	150K	5%	1/10W	
R29	1-216-097-11	RES-CHIP	100K	5%	1/10W	
R30	1-216-097-11	RES-CHIP	100K	5%	1/10W	
R31	1-216-081-00	METAL CHIP	22K	5%	1/10W	
R32	1-216-109-00	METAL CHIP	330K	5%	1/10W	
R33	1-216-105-11	RES-CHIP	220K	5%	1/10W	
R34	1-216-009-11	RES-CHIP	22	5%	1/10W	
R35	1-216-065-11	RES-CHIP	4.7K	5%	1/10W	
R36	1-216-097-11	RES-CHIP	100K	5%	1/10W	
R37	1-216-117-00	METAL CHIP	680K	5%	1/10W	
R38	1-216-109-00	METAL CHIP	330K	5%	1/10W	
R39	1-216-101-00	METAL CHIP	150K	5%	1/10W	
R40	1-216-114-00	RES-CHIP	510K	5%	1/10W	
R41	1-216-093-11	RES-CHIP	68K	5%	1/10W	
R42	1-216-103-00	METAL CHIP	180K	5%	1/10W	
R43	1-216-097-11	RES-CHIP	100K	5%	1/10W	
R44	1-216-085-00	METAL CHIP	33K	5%	1/10W	
R45	1-216-081-00	METAL CHIP	22K	5%	1/10W	
R46	1-216-097-11	RES-CHIP	100K	5%	1/10W	
R47	1-216-105-11	RES-CHIP	220K	5%	1/10W	
R48	1-216-073-00	METAL CHIP	10K	5%	1/10W	
R49	1-216-065-11	RES-CHIP	4.7K	5%	1/10W	
R50	1-216-065-11	RES-CHIP	4.7K	5%	1/10W	
R51	1-216-295-00	SHORT	0			

www.manualscenter.com

SERVO **SUB**

Ref. No.	Part No.	Description	Remark
		< CERMET RESISTOR >	
RV1	1-238-091-11	RES, ADJ, CERMET 22K	
RV4	1-238-091-11	RES, ADJ, CERMET 22K	
**********			
*	1-659-834-11	SUB BOARD	
		**********	
		< CONNECTOR >	
CN1	1-770-347-21	CONNECTOR, FPC 6P	
**********			
		MISCELLANEOUS	
		**********	
5	1-776-527-61	CORD (WITH CONNECTOR) (ISO) (POWER)	
207	1-659-880-11	MOTOR FLEXIBLE BOARD	
⚠210	8-820-010-06	PICK-UP, OPTICAL KSS-521A/K1RP	
212	1-659-881-11	PICK-UP FLEXIBLE BOARD	
F901	1-532-877-11	FUSE (BLADE TYPE) (AUTO FUSE) 10A	
M901	X-3371-664-2	MOTOR ASSY (SPINDLE)	
M902	A-3291-674-A	MOTOR ASSY, SLED (SLED)	
M903	A-3291-676-A	MOTOR SUB ASSY, LOADING (LOADING)	
**********			
		ACCESSORIES & PACKING MATERIALS	
		**********	
	3-043-127-11	MANUAL, INSTRUCTION (ENGLISH,SPANISH, SWEDISH,PORTUGUESE) (AEP,UK)	
	3-043-127-21	MANUAL, INSTRUCTION (FRENCH,GERMAN, DUTCH,ITALIAN,GREEK) (AEP)	
	3-043-127-31	MANUAL, INSTRUCTION (GERMAN) (G)	
	3-043-127-41	MANUAL, INSTRUCTION (ENGLISH,CZECH, POLISH,TURKISH,RUSSIAN) (SE)	
	3-043-128-11	MANUAL, INSTRUCTION, INSTALL (ENGLISH, SPANISH,SWEDISH,PORTUGUESE) (AEP,UK)	
	3-043-128-21	MANUAL, INSTRUCTION, INSTALL (FRENCH, GERMAN,DUTCH,ITALIAN,GREEK) (AEP,G)	
	3-043-128-31	MANUAL, INSTRUCTION, INSTALL (ENGLISH, CZECH,POLISH,TURKISH,RUSSIAN) (SE)	
	X-3374-927-3	CASE ASSY (for FRONT PANEL)	
**********			
		**********	
		HARDWARE LIST	
		**********	
#1	7-685-793-09	SCREW +PTT 2.6X8 (S)	
#2	7-685-792-09	SCREW +PTT 2.6X6 (S)	
#3	7-685-795-09	SCREW +PTT 2.6X12 (S)	
#4	7-621-772-10	SCREW +B 2X4	
#5	7-685-106-19	SCREW +P 2X10 TYPE2 NON-SLIT	
#6	7-627-553-17	SCREW, PRECISION +P 2X2 TYPE 3	
#7	7-628-253-00	SCREW +PS 2X4	
#8	7-627-553-37	SCREW, PRECISION +P 2X3 TYPE 3	
#9	7-627-000-00	SCREW, PRECISION +P 1.7X2.2 TYPE 3	
#10	7-627-850-28	SCREW, PRECISION +P 1.4X3	
**********			

Ref. No.	Part No.	Description	Remark
		PARTS FOR INSTALLATION AND CONNECTIONS	
		**********	
251	X-3373-600-1	FRAME ASSY	
252	X-3374-928-1	COLLAR ASSY	
253	X-3370-077-1	SCREW ASSY (AE.KEY), FITTING	
254	3-386-828-01	SCREW, FITTING	
255	3-349-410-01	BUSHING	
256	3-388-078-01	KEY	
257	1-776-527-61	CORD (WITH CONNECTOR) (ISO) (POWER)	
258	1-465-459-21	ADAPTOR, ANTENNA	

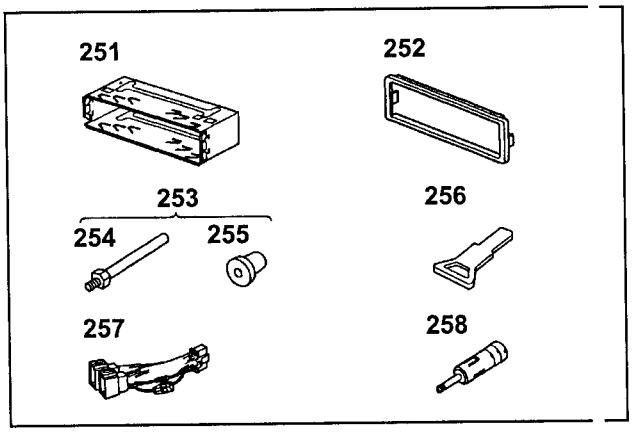

The components identified by mark ⚠ or dotted line with mark ⚠ are critical for safety.
Replace only with part number specified.

www.manualscenter.com

Sony Corporation
Mobile Electronics Division Company

2000A047542-1
Printed in Hungary ©2000. 1
Published by General Engineering Dept.