PHIL -05332

CD Car Radio 22RC959/00

Service
Service
Service

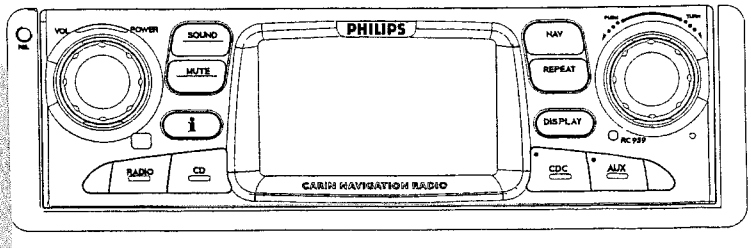

CLASS 1
LASER PRODUCT

For repair information of the CD deck, see service manual 4822 725 25483 of CD deck CDMM2.

5317 20

Service Manual

12 V

Contents page

Published by Philips Car Systems Printed in the Netherlands Subject to modification

4822 725 25864

PCS 98 491

PHILIPS

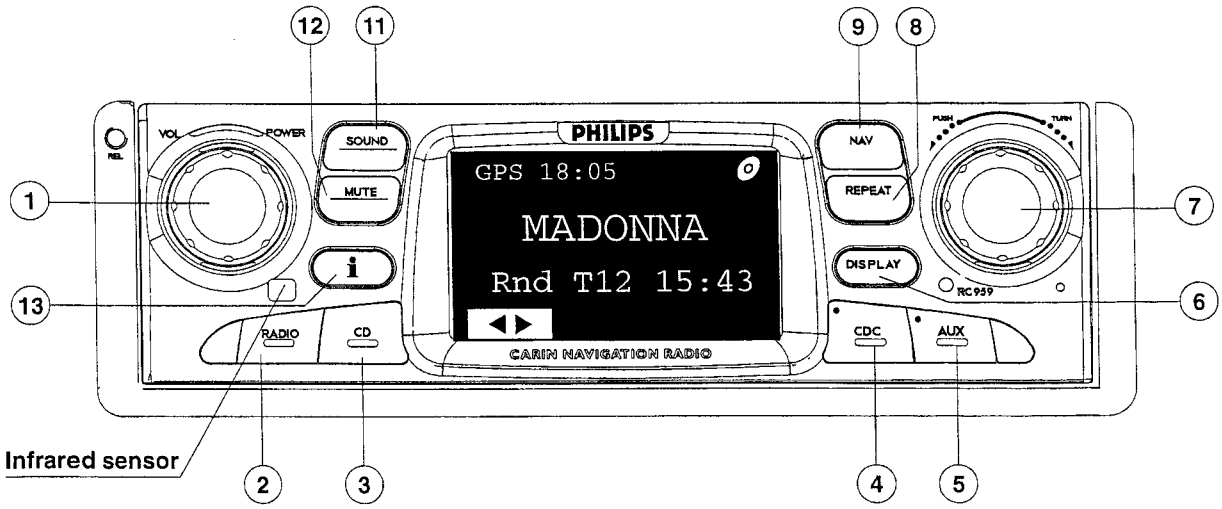

	Keys	Application	Action
1	Audio Rotary button	Audio	adjust selected audio settings
		Power control	Power switch On/Off
11	Sound key	Audio	select audio settings
12	Mute key	Audio	Volume mute selection
8	Repeat key	Navigation	Repeat last Navigation message
7	Menu rotary button	User Interface	Menu items selection or DFA activation
			Menu item activation or DFA selection
6	Display key	User Interface	Audio / Navigation display selection
13	Information key	Announce	Announcement modes selection
2	Radio key	State control	Radio source selection
3	CD key or Tape key	State control	Player source selection
9	Navigation key	User interface	Navigation menu enter
4	CDC key	State control	CDC source selection
5	Tel./Aux key	State control	Telephone or Auxiliary source selection
REL	Front flap down button	Power control	Remove front

Zoom on C chamber

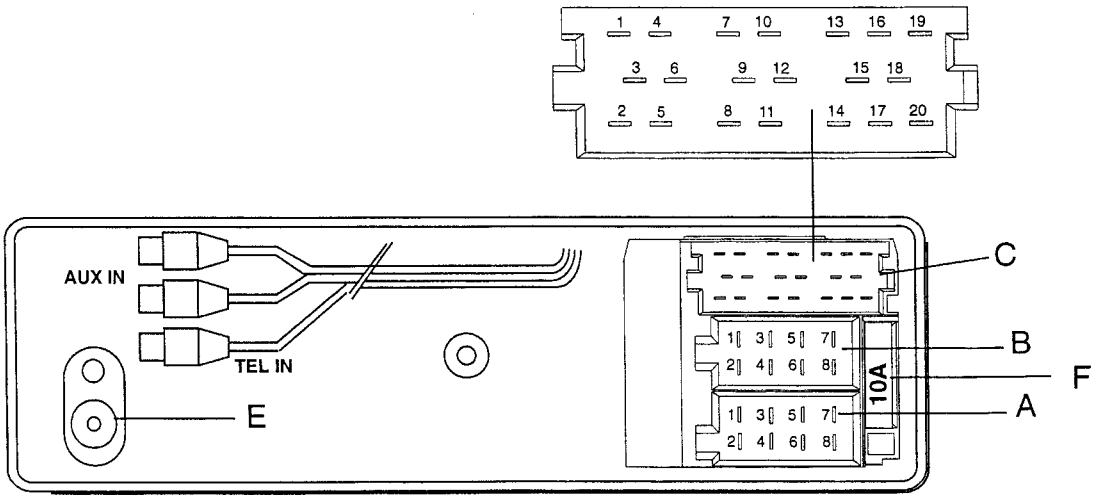

		Name of signal on schematic PS01
A : POWER SUPPLY		
A1	Telephone mute	A1
A2	N.C.	
A3	N.C.	
A4	Plus permanent +	POWER
A5	Electrical antenna	A5
A6	External illumination plus	A6
A7	Ignition On / Off	NO_POWER
A8	Power ground	
B : LOUDSPEAKER SUPPLY		
B1	Rear right +	B1
B2	Rear right -	B2
B3	Front right +	B3
B4	Front right -	B4
B5	Front left +	B5
B6	Front left -	B6
B7	Rear left +	B7
B8	Rear left -	B8

			Name of signal on schematic UP02
C:			
C:			
C1	Rear left	C1	LO_RL
C2	Rear right	C1	LO_RR
C3	Gnd	C1	
C4	Front left	C1	LO_FL
C5	Front right	C1	LO_FR
C6	= A5	C1	
C7	= A7	C2	NO_POWER
C8	Carin in	C2	CARIN_AUD
C9	Carin ref	C2	CARIN_REF
C10	D2B+	C2	DB+
C11	D2B GND	C2	
C12	D2B-	C2	DB-
C13	D2B+	C3	DB+
C14	D2B-	C3	DB-
C15	D2B GND	C3	
C16	+ Permanent	C3	+14V/4 CDC
C17	= A5	C3	
C18	In ref	C3	CDC_REF
C19	In left	C3	CDC_LEFT
C20	In right	C3	CDC_RIGHT

C1 Line out
for YELLOW connector

C2 Line out
For GREEN connector

C3 CD changer
for BLUE connector

E : Aerial plug slide in

F : Fuse 10A

PCS 98 493

REMOVING THE PWB

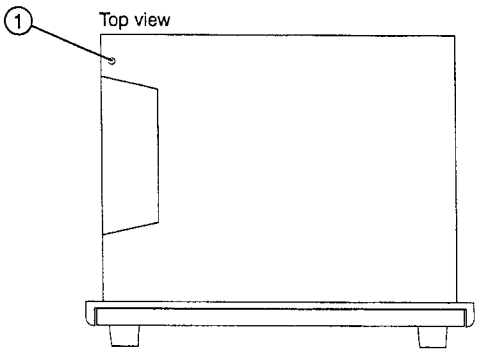

Remove the cover top (screw **1**) and the cover bottom
Remove the detachable front

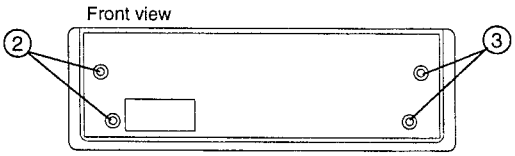

Remove the fixed front (screws **2** and **3**)

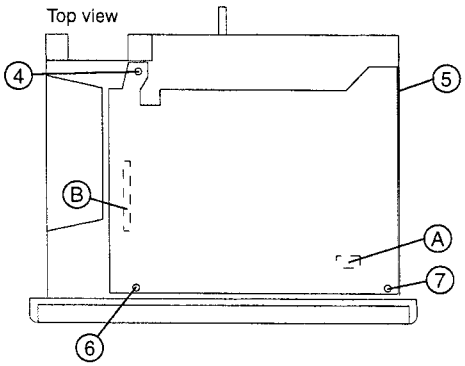

Remove the deck (screws **4**,**5**,**6** and **7**)
Disconnect the **A** connector
Disconnect the **B** connector

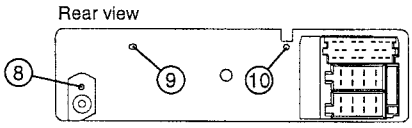

Remove the antenna plug bracket (screws **8**)
Remove the main PWB (screws **9** to **17**)

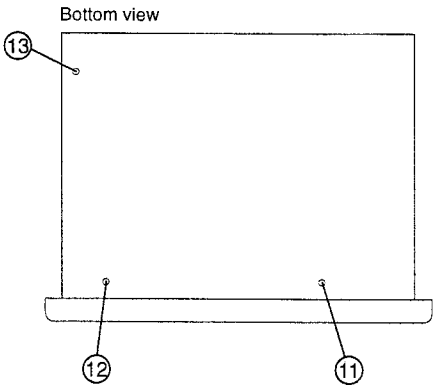

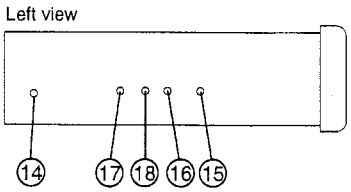

22RC959/00

This sets can be used either as a single radio part, or can be included in a system.
The system is composed of:
The head unit 22RC959/00
A Carin MK2i navigation 22SY059
An optional CD Changer
An optional infrared remote control

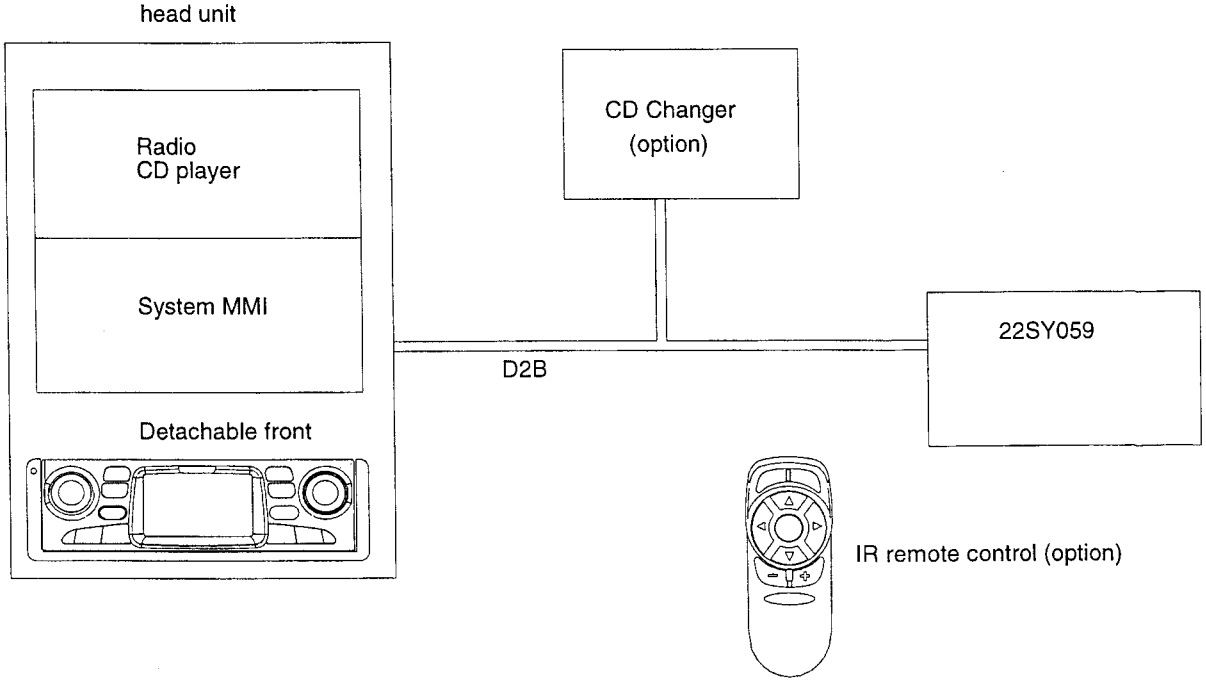

This Service Manual concerns only the set 22RC959/00.

ESD

WARNING

All ICs and many other semi-conductors are susceptible to electrostatic discharges (ESD). Careless handling during repair can reduce life drastically.
When repairing, make sure that you are connected with the same potential as the mass of the set via a wrist wrap with resistance. Keep components and tools also at this potential.

ESD equipment available:

Anti-static table mat large 100X650X1.25mm	4822 466 10953
small 600X650X1.25mm	4822 466 10958
Connection box (1Mohm)	4822 395 10223
Extendible cable (to connect wrist band to connection box)	4822 320 11307
Connecting cable (to connect table mat to connection box)	4822 320 11305
Earth cable (to connect any product to mat or box)	4822 320 11308
Complete kit ESD3 (combining all above products)	4822 310 10671
wristband tester	4822 344 13999

TECHNICAL DATA

GENERAL

Power supply	:10.8 to 15.6V DC
Dimensions	:180x150x51 mm
Front	: Full detachable
Security code	: No
Blinking LED	: Yes
Quiescent current (at 12.6V)	: <3mA (with clock and blinking LED)

RADIO

LW	: 144-288 KHz - steps Manual / Search : 1 KHz
MW (Europe)	: 531-1629 KHz - steps Manual / Search : 1 / 9 KHz
MW (USA)	: 530-1710 KHz - steps Manual / Search : 1 / 10 KHz
SW	: 5.95-6.25 MHz - steps Manual / Search : 1 KHz
FM (Europe) X2	: 87.5-108 MHz - steps Manual / Search : 50 / 50KHz
FM (USA) X2	: 87.9-107.9 MHz - steps Manual / Search : 50 / 50KHz
IF-AM (1/2)	: 10.7 MHz / 450 KHz
IF-FM (1/2)	: 72.2 MHz / 10.7 MHz
Sensivity 26dB S/N	: 20µV (LW)
	: 14µV (MW)
	: 14µV (SW)
	: 3µV (FM)
Limitation α-3dB	: 6to 10µV

CD

CD mechanism	: CDMM2 1.2
Frequency response	: 20- 20KHz
Crosstalk L-R at 1KHz	: >40 dB

AMPLIFIER

Output power	: 4x21W / 4Ω (THD = 10%)
Treble control	: +10 / -10 at 10kHz
Bass control	: +12 / -12 at 80Hz
Balance control	: 70dB
Fader	: 70dB

Information on the CDMM2 CD deck:

In order to solve some problems, an additional inductor 10µH has been mounted on the control PWB.
You may find this change only on first models.

When you change the CD deck, do not apply this change, as the stock has already been modified.

Short extraction of the Directions For Use.
This will lead you in the use of this set, which is menu driven.

LEGEND **Press the button** **Turn the button**

BASIC FUNCTIONS

SOUND

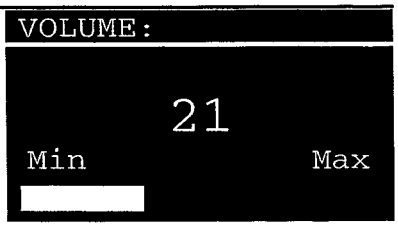

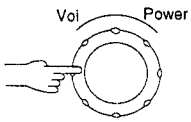

- **On/Off:** Switch the set On or Off

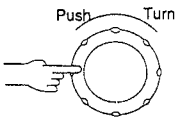

- Confirm the warning 'Always observe roadway signs and signals' (if a nav is connected)

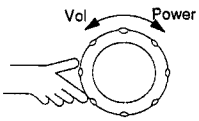

- **Volume:** Adjust the volume.

- **Mute (silence):** Mute the set or cancel the mute

RADIO

- **Radio mode:** Listen to the radio

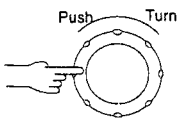

- **Tuning method:** Select one of the following tuning methods.

A-Z **To tune to a station name** (if an RDS station on FM). Stations are stored in alphabetical order. *If you hear an error bleep: update the list of station names by activating 'RDS memo'.*

- To tune to a frequency automatically.
If 'Traffic' is activated the radio will only search for stations allowing the reception of traffic annoucements.

- To tune to a frequency manually (if 'Manual tuning is activated). Also press the button to stop the fast tuning. *After 50 seconds or after selecting a different tuning method the radio switches back to automatic frequency tuning.*

- To tune to a programme type (if 'PTY' search is activated). When no station is found or after selecting a different tuning method, the radio switches back to automatic frequency tuning.

P **To tune to a preset.**

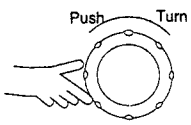

- **Tuning:** Tune in the desired station

CD PLAYER

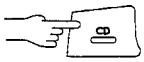

- **CD player mode:** Listen to the inserted CD.

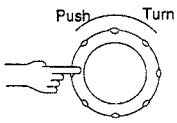

- **Select function:** Select one of the following CD player functions:

To select a specific track (previous/next)

To move backwards/forwards. Also press the button to stop the fast backward/forward.

To switch on/off the playback of the tracks in random order.

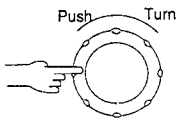

- **Activate selected function:** Move to another part of the CD or switch the random playback on/off.

CD CHANGER (if connected)

- **CD changer mode:** Listen to a CD loaded in the magazine and inserted in the CD changer.

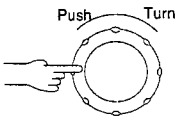

- **Select function:** Select one of the following CD changer functions:

To select a specific track (previous/next)

To move backwards/forwards. Also press the button to stop the fast backward/forward.

To select a specific CD.

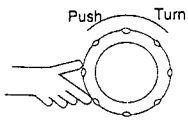

- **Activate selected function:** Move to another part of the CD or to another CD.

AUXILIARY (if portable player is connected)

- **Auxiliary mode:** listen to the portable sound player.

DISPLAY

- **Display:** Show information on the sound output.

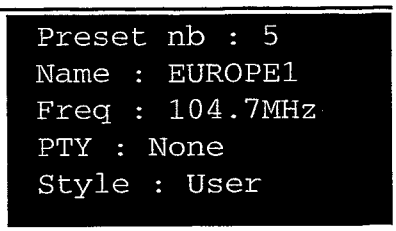

NAVIGATION (if connected)

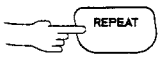

- **Repeat:** Repeat the last spoken guidance message. During a phone call (if phone is linked to the set) these messages are replaced by beeps. You can then press this key to hear the spoken guidance message.

EXPLANATION DISPLAYS

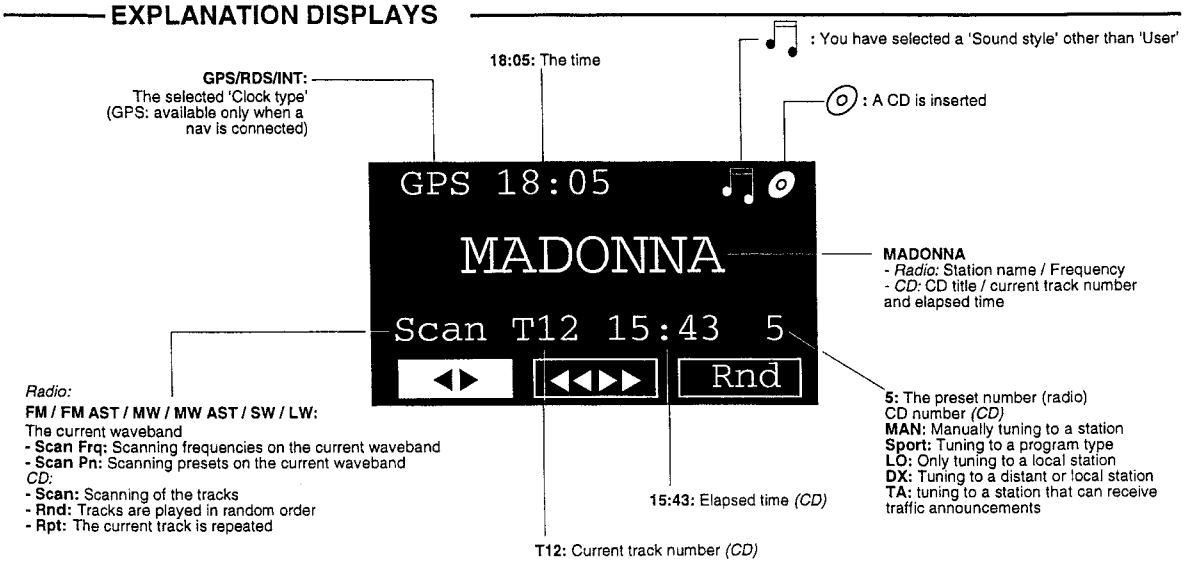

MENU OPERATION

- **Menu on/off:** Enter/leave one of the following menus.

- **Information menu**

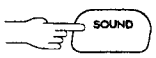

- **Sound menu**

- **Radio menu** (when already in radio mode)

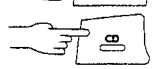

- **CD menu** (when already in CD player mode)

- **CD changer menu** (when already in CD changer mode)

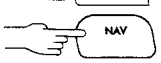

- **Navigation menu** (when a Nav is connected)

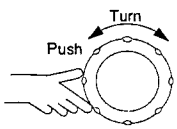

- **Selection:** Place the cursor on the desired option/character.
  The following indications are given on screen:
  - OPTION : Option in dotted characters cannot be selected.
  - ▲▼ : Arrows in front of options indicate that more options are available than displayed.
  - ✓ : A tick shows that the function is activated.
  To enter a name select one character after another from the alphanumerical list.

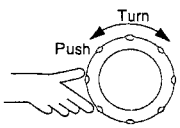

- **Confirmation:** Confirm the selected option/character.
  The following menu functions can also be available:
  - **'QUIT'** and **'RETURN':** return to the previous display. 'QUIT' is often available when placing the cursor on the menu title.
  - **'OK':** Confirm the entered name.
  - **'DELETE':** Delete the last entered character.
  - **'LIST':** display the list of possibilities.
  - **'RESTORE':** Recall the name entered previously.

INFORMATION MENU

Traffic: Activate to listen to Traffic Announcement (TA) when broadcast (even if you play a CD or mute the set). The set may also receive traffic announcements from other stations.

- *If you hear an error beep:* The radio is not already tuned to a station enabling the reception of traffic announcements. The radio automatically searches until it finds another station.

- *If you hear error beeps at repeated intervals:* You are i an area where no traffic information is broadcast. Deactivate the 'Traffic' function or tune to a different station.

Also press the ◎ button to stop listening to a particular traffic announcement (the 'Traffic' function remains active).

News: Activate to listen to news bulletins when broadcast (even if you play a CD or mute the set). The set may also receive news bulletins from other stations. Traffic announcements may interrupt news bulletins. *'News' is not yet implemented in all countries.*

Also press the ◎ button to stop listening to a particular news bulletin (the 'News' function remains active).

Announcement level: Adjust the volume difference of traffic announcements, news bulletins and alarm messages.

SOUND MENU

Loudness: Activate to amplify the low and high notes at low volume settings.

Sound settings: Adjust the bass (low notes), treble (high notes), balance (left-right) and fader (rear-front). The bass and treble settings are stored independently for each sound source.

Sound style: Choose one of the predefined sound styles. Select 'User' to maintain your own bass and treble settings. The sound style is stored independently for each sound source.

Sound reset: Switch the loudness off, reset the sound settings to their mid-positions and adjust the 'Sound style' to 'User'.

▶ **Sound setup:** To adjust one of the following functions.

SDVC (Speed-dependent volume control, if a navigation system is connected): Adjust the volume compensation linked to your driving speed.

Leveller: Activate to adjust the volume of each sound source to the same level.

Loudness low: Adjust the amplification of the low notes in loudness.

Loudness high: Adjust the amplification of the high notes in loudness.

Bass frequency: Select the average frequency of low notes.

Treble frequency: Select the average frequency of high notes.

▶ **Initialization:** See 'INITIALIZATION SUBMENU'.

RADIO MENU

RDS Memo (only on FM): Activate update the list of station names you can tune to alphabetically. You hear a beep. Wait until the set has finished storing the RDS stations.

Autostore (only on FM and MW): Activate to automatically store 10 FM stations on the FM AST band or 10 MW stations on the MW AST band. You hear a beep. Wait until the set has finished storing the strongest stations.

Scan: Activate to briefly listen to each station or preset on the current waveband. Also press the ◎ button to deactivate this function when you hear a station you like.

Band: Select the desired waveband.

AF retuning (only on FM): Activate to maintain the best possible reception. The set continuously checks a list of Alternative Frequencies (AF) for the tuned radio station and automatically select the best frequency for you. Only deactivate this function when you hear short sound interruptions or when the set automatically tunes to an unwanted station.

Manual tuning: Activate to manually tune to a frequency when you can not find the desired station using automatic tuning.

Store preset: Store the station you are listening to as a preset. Then select its position in the preset list. When storing an FM station, the 'AF retuning' (on/off) is stored on the preset.

Recall program (only on FM): Select the name of the station you want to listen to from the list.

Recall preset: Choose the preset you want to listen to from the list.

PTY search (only on FM): Tune to a station according to the type of programme (PTY) being broadcast. Select the programme type from the list. *PTY is not yet implemented in all countries.*

▶ **Radio setup:** Adjust one of the following functions.

Search level: Select 'LO' if you *only* wish to search local stations (strong stations) when tuning to a frequency automatically. Select 'DX' to search for distant stations too.

Tuner grid: Select the tuner according to European or American standards.

Scan type: Choose between a frenquency or a preset scan.

▶ **Initialization:** See 'INITIALIZATION SUBMENU'

CD PLAYER MENU

Scan: Activate to listen to the beginning of each track. Also press the ◎ button to deactivate this function when you hear a track you like.

Repeat track: Activate to replay your favourite track.

CD title: Assign a name to the CD you are listening to, with a maximum of 13 characters. If the memory containig 50 titles is full, select a title you want to delete before entering the new title.

▶ **CD setup:** Adjust one of the following functions.

Compression: Activate to reduce the volume of loud sections and increase the volume at quiet sections.

Compression rate: Select the amount of volume reduction/increase when the compression is switched on.

▶ **Initialization:** See 'INITIALIZATION SUBMENU'

CD CHANGER MENU

Scan: Activate to listen to the beginning of each track. Also press the ◎ button to deactivate this function when you hear a track you like.

Random: Activate to play the tracks on the CD in random order.

Repeat track: Activate to replay your favourite track.

Select CD: Select the desired CD from the list.

CD title: Assign a name to the CD you are listening to, with a maximum of 13 characters. If the memory containig 50 titles is full, select a title you want to delete before entering the new title.

▶ **CD changer setup:** Adjust one of the following functions.

Compression: Activate to reduce the volume of loud sections and increase the volume at quiet sections.

Compression rate: Adjust the level of volume reduction/increase when the compression is activated.

CD access: Choose whether you wish to select the CD number or the CD title from the 'Select CD' menu.

▶ **Initialization:** See 'INITIALIZATION SUBMENU'

INITIALIZATION SUBMENU

Language (if no navigation system is connected): Choose the language of the display readings.

Telephone: Select 'MUTE' to automatically interrupt the set's sound output when using your car phone. Select 'IN' when you also wish to amplify the received voice through the car speakers. Select 'NONE' if no car phone is connected to the set.

Telephone signal: Adjust according to your telephone mute signal ('LOW' in most cases).

Beep type: Select the type of confirmation beeps.

Guidance level (if navigation system is connected): Adjust the volume difference of the spoken guidance messages.

▶ **Clock settings:** To adjust the time.

Clock type: Select an iinternal clock (INT) or a clock which is automaticslly updated via RDS or via GPS (only if a navigation system is connected).

Clock format: Select the desired clock format.

Hour (if an internal clock type): Adjust the hours.

Minute (if an internal clock type): Adjust the minutes.

Summer time (if a GPS clock type): Add/substract an hour.

Timezone (if a GPS clock type): Determine the time difference with London Greenwich Mean Time.

Scan time: Select how many minutes the set scans one station or track.

On-off logic: Activate to limit the use of the set to one hour after you have removed the car ignition key.

Warning light: Activate to switch on the flashing red light when the detachable front is removed.

Contrast: Adjust the contrast of the display.

Loudspeaker test: Test the loudspeakers connections and their positioning. Switch the set off to end the test session.

DESCRIPTION OF THE CAR DIGITAL SIGNAL PROCESSOR (CDSP) SAA7701

The CDSP chip can perform all the signal functions in front of the power amplifier and behind the AM and FM demodulation and tape input. These functions are: interference absorption, stereo decoding, RDS decoding, weak signal processing (soft-mute, sliding stereo, etc...), Dolby-B tape noise reduction and the audio volume controls (volume, balance, fader, tone, dynamic compression). Some functions have been implemented in hardware and are not freely programmable. Digital audio signals from external sources with I2S format are accepted.There are four independent analog output channels. This enables separate tone and equalisation control for front and rear speakers.
The DSP can contain a basic program which enables already a set with AM/FM reception, sophisticated FM weak signal functions, MSS, Dolby-B tape noise reduction system, CD play with compressor function, separate bass and treble tone control and fader/balance control.

Hardware features

- Bit stream 3rd order Sigma-Delta A/D converters with anti alliasing broadband input filters
- D/A converters with four over sampling and noise shaping
- Digital stereo decoder
- Improved, digital IAC
- RDS processing with optional 16 bit buffer via separate channel (two tuner radio possible)
- Auxiliary analog CD input (CD-walkman, speech, economic CD-changer etc...)
- Two separate full I2S CD and DCC high performance interfaces
- Expandable with additional DSPs for sophisticated features through an I2S gateway
- Audio output short circuit protected
- I2C bus controlled
- Analog tape input
- -40 to +85° C operating temperature range

Software features

- Improved FM weak signal processing with more stereo
- Integrated 19KHz MPX filter and de-emphasis
- Electronic adjustments: FM/AM level, FM channel separation, Dolby level
- Baseband audio processing (treble/bass/balance/fader/volume)
- Dynamic loudness or bass boost
- Stereo 1 or 3 band parametric equaliser
- Automatic leveller (in combination with microprocessor)
- Tape equalisation (DCC analog playback)
- Music Search detection for tape (MSS)
- Pause detection for RDS updates
- Dolby-B tape noise reduction
- (adjustable) dynamic compressor
- CD/DCC De-emphasis processing
- Signal level, noise and multipath detection for RDS (I2C bus command)
- Hidden mute during RDS updates
- Improved AM reception

BLOCK DIAGRAM

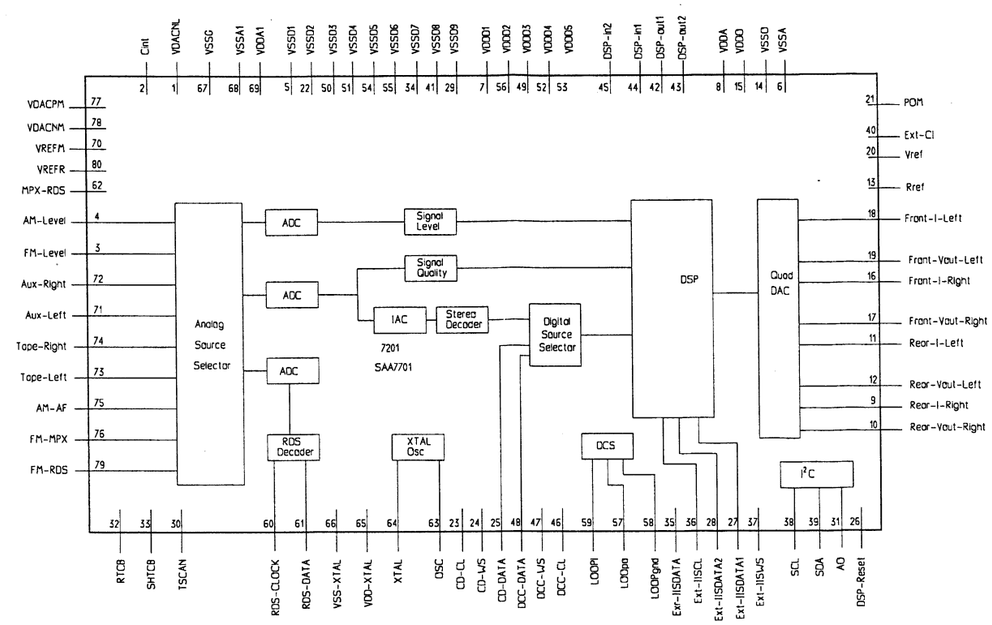

FUNCTIONAL DESCRIPTION

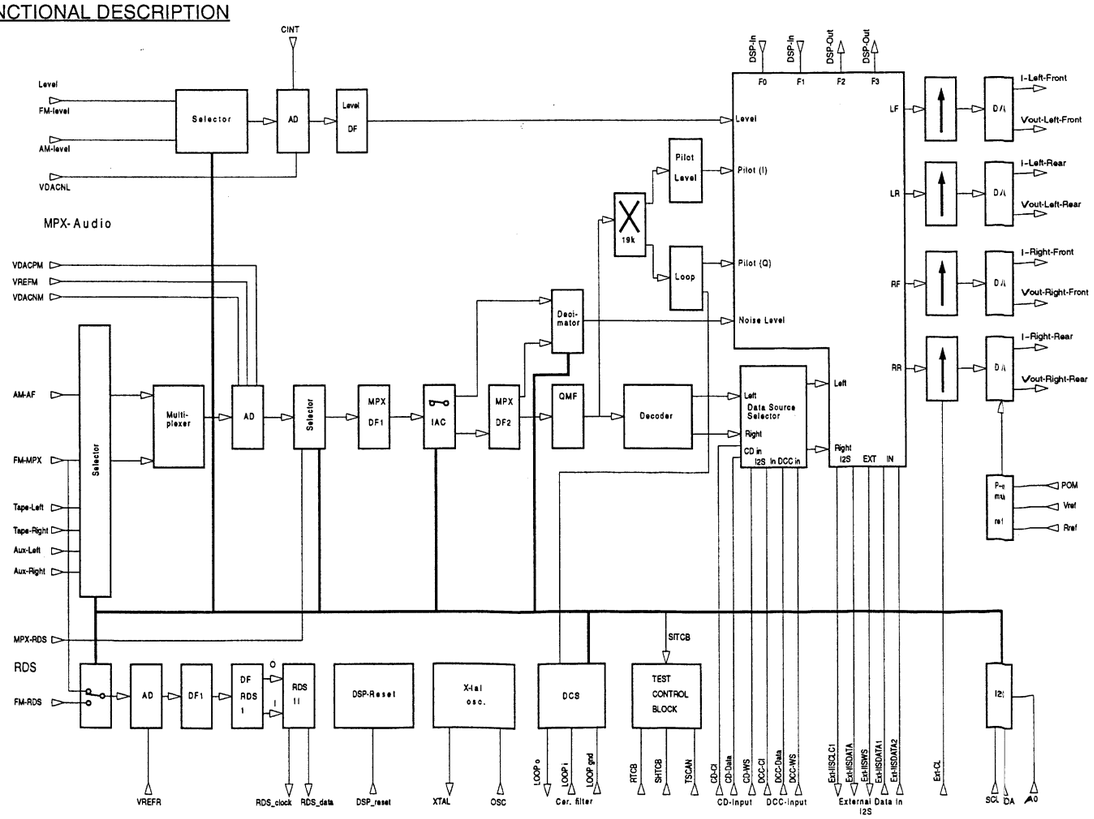

.PINNING OF THE CDSP SAA7701

SYMBOL	PIN	DESCRIPTION
VDACNL	1	Ground Reference Level AD DAC LEVEL
CINT	2	Level AD switch mode integrator connection
FM-level	3	FM-level input pin. Via this pin the level of the received FM-radio signal is fed to the CDSP. The level information is needed for a correct functioning of the weak signal behaviour.
AM-level	4	AM-level input pin. Via this pin the level of the received AM-radio signal is fed to the CDSP.
VSSD1	5	Supply ground 1 digital circuitry DACs
VSSA	6	Supply ground analog circuitry DACs
VDDD1	7	Positive supply 1 digital circuitry DACs
VDDA	8	Positive supply analog circuitry DACs
Rear-I-Right	9	Analog audio current output for Rear-right speaker
Rear-Vout-Right	10	Analog audio voltage output for Rear-right speaker
Rear-I-Left	11	Analog audio current output for Rear-left speaker
Rear-Vout-Left	12	Analog audio voltage output for Rear-left speaker
Rref	13	Input for the internal reference current source of the D/A converter
VSSO	14	Supply ground for output Op-amps DAC
VDD0	15	Positive supply for output Op-amps DAC
Front-I-Right	16	Analog audio current output for Front-right speaker
Front-Vout-Right	17	Analog audio voltage output for Front-right speaker
Front-I-Left	18	Analog audio current output for Front-left speaker
Front-Vout-left	19	Analog audio voltage output for Front-left speaker
Vref	20	Voltage input for the internal reference buffer amplifier of the D/A converter.
POM	21	Activates the Power On Mute. Timing is determined with an external capacitor.
VSSD2	22	Ground supply 2 digital circuitry
CD-CI	23	I^2S Clock input CD digital audio source. Also reference for 4* asf and asf. Selected if DIV-EXT/INT is not set. / Output LIRS scan chain 6
CD-WS	24	I^2S Word Select Input CD digital audio source / Input LIRS scan chain 6
CD-Data	25	I^2S Left/Right Data Input CD digital audio source / Input LIRS scan chain 1
DSP-reset	26	Input to reset DSP-core (active low) / input LIRS scan chain 3
Ext_IISDATA1	27	I^2S External Input Data channel 1 (front) from extra DSP chip / input CORE scan chain DIO
Ext_IISDATA2	28	I^2S External Input Data channel 2 (rear) for extra DSP chip
VSSD9	29	Ground supply 9 digital circuitry
TSCAN	30	Scan control (active high)
A0	31	Slave sub-address I^2C selection / Serial data input test control block (SITCB)
RTCB	32	Asynchronous Reset test control block (active high)
SHTCB	33	Shift clock test control block (active high)
VSSD7	34	Ground supply 7 digital circuitry
Ext_IISDATA	35	I^2S External Output Data for extra DSP chip / output LIRS scan chain 4; controlled by ENA_IIS (bit 13)
Ext_IISCL	36	I^2S External Output Clock for extra DSP chip / output LIRS scan chain 3; controlled by ENA_IIS (bit 13)
Ext_IISWS	37	I^2S External input/output Word select for extra DSP chip / output CORE scan chain DIO; controlled by ENA_IIS (bit 13)
SCL	38	Serial clock input (I^2C bus) / input LIRS scan chain 4
SDA	39	Serial data input/output (I^2C bus)
EXT-CI	40	External reference clock input to generate 4*asf and ASF synchronisation. To be used in case the I^2S clock inputs are not suitable. Selection if DIV-EXT/INT is set / Latch signal DAC data words in analog test mode.
VSSD8	41	Ground supply 8 digital circuitry
DSP_out1	42	Digital output 1 from DSP-core (F2 of status register) / output CORE scan chain (tri-state for Debug board)
DSP_out2	43	Digital output 2 from DSP-core (F3 of status register) / IAC trigger output / output DAC scan chain 1; actived by AGC_TRIG (bit 15)

SYMBOL	PIN	DESCRIPTION
DSP_in1	44	Digital input 1 for DSP-core (F0 of status register) / input LIRS scan chain 2
DSP_in2	45	Digital input 2 for DSP-core (F1 of status register) / input CORE scan chain
DCC-CI	46	I^2S Clock input DCC digital audio source. Also reference for 4*asf and asf. Selected if DIV-EXT/INT is not set. / Input DAC digital scan chain 1 / input DAC analog scan chain LEFT / input external MPX ADC if SEL-EXT/ADC is set.
DCC-WS	47	I^2S Word Select input DCC digital audio source / input DAC digital scan chain 2 / input DAC analog scan chain RIGHT / input external RDS ADC if SEL-EXT/ADC is set.
DCC-Data	48	I^2S Left/RIGHT Data input DCC digital audio source / output LIRS scan chain 5 / input external LEVEL ADC if SEL-EXT/ADC is set.
VDDD3	49	Positive supply 3 digital circuitry
VSSD3	50	Ground supply 3 digital circuitry
VSSD4	51	Ground supply 4 digital circuitry
VDDD4	52	Positive supply 4 digital circuitry
VDDD5	53	Positive supply 5 digital circuitry
VSSD5	54	Ground supply 5 digital circuitry
VSSD6	55	Ground supply 6 digital circuitry
VDDD2	56	Positive supply 2 digital circuitry
LOOPo	57	Unfiltered DCS clock output / output DAC scan chain 2 / LEVEL A/D bitstream output in analog A/D test mode / bit slicer output in slicer test mode
LOOPgnd	58	Ground connection DCS filter
LOOPi	59	Filtered DCS clock input / Bit slicer input in slicer test mode
RDS-Clock	60	Radio Data System bit clock output / output LIRS scan chain 1 / MPX A/D bitstream output in analog AD test mode / RDS external clock input; controlled by SEL-BUF/BUF (bit 7) / X-tal output in slicer test mode.
RDS-Data	61	Radio Data System data output / output LIRS scan chain 2 / RDS A/D bitstream output in analog AD test mode
MPX-RDS	62	Selects in FM-mode between FM-MPX and RDS-MPX input signal to the MPX decimation filter / input LIRS scan chain 5 / input A/D scan chain in analog test mode
OSC	63	Crystal oscillator output: Drive output to 36.860 MHz crystal or forced input in slave mode
XTAL	64	Crystal oscillator input: local crystal oscillator sense
VDD_XTAL	65	Positive supply X-TAL circuitry
VSS_XTAL	66	Ground supply X-TAL circuitry
VSSG	67	Ground guards ADs
VSSA1	68	Ground supply ADs analog
VDDA1	69	Positive supply ADs analog
VREFM	70	Mid ref voltage MPX AD and buffers
Aux-Left	71	Analog input pin for Auxiliary-Left signal
Aux-Right	72	Analog input pin for Auxiliary-Right signal
Tape-Left	73	Analog input pin for Tape-Left signal
Tape-Right	74	Analog input pin for Tape-Right signal
AM-AF	75	Analog input pin for AM audio frequency
FM-MPX	76	Analog input pin for FM-Multiplex signal
VDACPM	77	Positive reference voltage AD DAC MPX and RDS
VDACNM	78	Ground reference voltage AD DAC MPX and RDS
FM-RDS	79	Analog FM-MPX input pin for RDS decoding
VREFR	80	Mid ref voltage RDS AD, LEVEL AD and buffers

Explanation: LIRS is the abbreviation of the level, IAC, RDS and Stereo decoder part.

22RC959/00

Check and Alignment

For all measurements, please refer to the manual "General Check & Alignment procedures for Car Systems" 4822 725 25456, unless otherwise stated.

Current and voltage

1) SET OFF (A6 not connected)

SET OFF	Voltage	Current +Acc ON	Current +Acc OFF	Supply µP 560 pin 14	supply µP XA pin 17	V_LOW pin 4- 74HC251
Acc Supply	+12.6V	< 2mA		4. 7V	5V	5V
Perm Supply	+12.6V	< 2mA	<3 mA Led is ON - Front is out			

2) SET ON (A6 not connected)

Reset µP 560 pin 30	Reset µP XA pin 4	5V supply µP XA pin 17	5V supply µP 560 pin 14	V_LOW 74HC251 pin 4	5V Switch mode pin 2	8.5V LF85CDT pin 3	EEprom supply pin 8
0V	5V	5V	5V	5V	5.3V	8.5V	5V

Reference oscillator frequencies (to be measured via a X10 probe)

device	MSM 6307	83CE560	P51XAG3	SAA7701	SAA7366T	SAA1305T
pin	24 & 25	51 & 52	14 & 15	63 & 64	4	16 & 17
frequency	6 MHz 0.5%	16 MHz 0.5%	24MHz 0.5%	36.860 MHz 60 ppm	11.2896 MHz 60 ppm	32.768KHz 60 ppm

Checks:
1) FM

FM mute	98 MHz 1mV	output at load resistor R & L = 775 mV = REF
	no signal	output should be < -24 dB (REF - 24 dB)

Demodulated FM level	98 MHz	215 mV 2dB
	Input	MPX Output of IC96 (pin 10)

Limiting point α-3dB	FM 98MHz	1mV 400Hz	6µV	4µV	9µV
	RANGE	INPUT	NOMINAL	MIN	MAX

Search levels	Input	Dx: 10µV < X < 20µV Local : 190µV < X < 290µV
	98 MHz	

2) AM

Demodulated AM level	1053KHz - m=30% - 1KHz	230 mV 2dB
	Input	Audio output of IC96 (pin 19)

Sensivity at 26dB S/N	162KHz	m = 30%	400Hz	< 38µV
	1053KHz			< 30µV
	6100KHz			<25µV

Search levels	Input	Dx: 10µV < X < 20µV Local : 35µV < X < 100µV
	1053KHz	

No alignment is needed for radio part. The tuner module IC96 is pre-aligned in the factory.
Dolby alignment, crosstalk alignment and FM DC level curve learning procedure are performed via a special equipment and software, not yet available in Service.
Some values are stored in the EEprom.
The EEprom available in service will contain mean values, that could affect slightly the performance of the set. It is the only solution until further notice.
Consequence: If you change the tuner module, change also the EEprom.

CD part

Test CD	Test	Result
Eccent-music 150um 4822 397 30279	Insert disk and play track 01	No failure
Vertical deviation 4822 397 30282	Check loading, display of number of tracks and total time. Select track no 9 time 00.20 listen to the disk during 4 seconds	no electrical nor mechanical noise

Test CD	Test		Result
Audio signal disk 1 4822 397 30184	Compression Off	Crosstalk track 67 and 71	Crosstalk < -65dB
	Compression On		Crosstalk < -60dB

Signal to noise ratio

A weighted filter, track 1 versus track 49 of disk 1	
Compression Off	S / N > 75dB
Compression On (default 1)	S / N > 45dB

22RC959/00

Test modes

-Functional test - This test checks the functionality of the user inputs (switches, rotary switches, infra red remote control).

Entering the test:
Press Nav + Sound + Power keys
The buttons illumination led's are switched on sequentially every 250 ms. The day/night output is switched on and off every second.
A start message is displayed:

EJECT KEY TEST
SLIDING DOOR

Open the front by pushing the release button, then press eject key, and close the front again.
The display shows:

KEYBOARD TEST

Press all the buttons of the keyboard. A specific message appears at each key pressed, e.g.:

MUTE KEY

When all the key are tested, the display shows:

KEYBOARD OK
SOUND ROTARY

Turn the volume button in both directions
The display shows:

KEYBOARD OK
<<SOUND ROTARY>>
MENU ROTARY

Turn the menu button in both directions
The display shows:

KEYBOARD OK
<<SOUND ROTARY>>
<<MENU ROTARY>>
RC5

Press Enter switch of the remote control
The display shows:

KEYBOARD OK
<<SOUND ROTARY>>
<<MENU ROTARY>>
RC5 >> >>
PRESS ANY KEY->T7

If this test is successful, pressing any key enters the test of the Hardware/Software interface between the processor and the LCD driver, as well between LCD driver and LCD, and functional test of illumination.
The display shows sequentially different patterns, the sequence is done by pressing the CD switch of the keyboard.
At any time, the dimming test can be executed by masking the light sensor (under the 'DISPLAY' key).

To exit this test, switch Off the set.

Patterns:

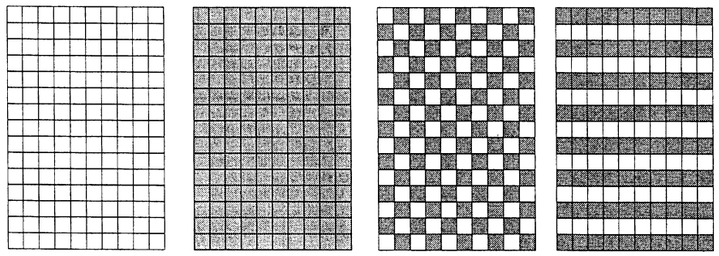

- Service test:
Press Info+ Display+ Power keys
The following cycle is executed continuously:
- Display the same patterns as the previous test, each pattern being displayed during 5 sec.
- Display the real time calculated check-sum of each processor, diring 5 sec.
- Display the soft identity of each processor during 5 sec.
- Display the version of each processor during 5 sec.

To exit this test, switch Off the set.

ELECTRICAL BLOC DIAGRAM

22RC959/00

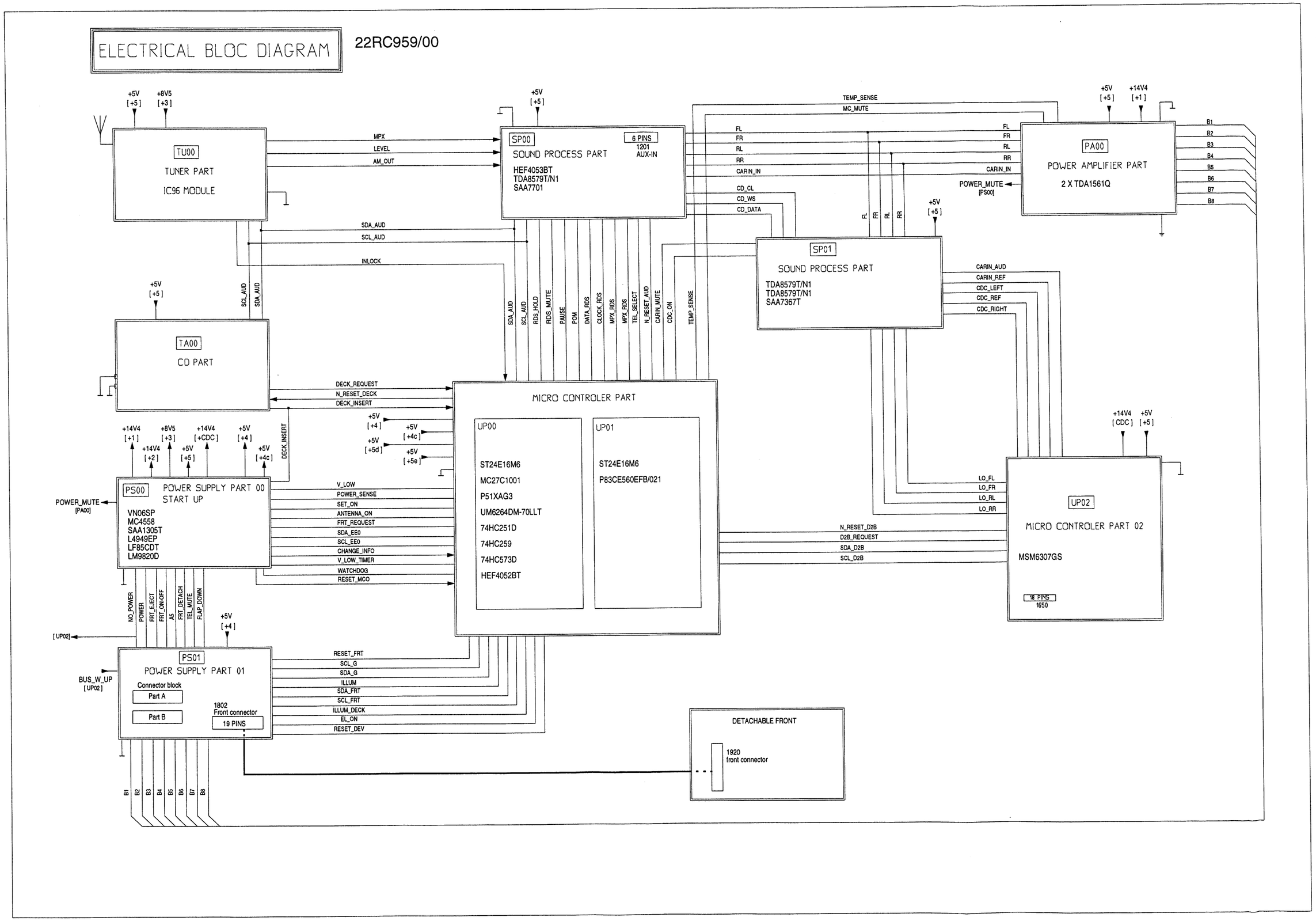

WARNING: The front schematic diagrams are given for information only. The complete front itself is a service part, not repairable.

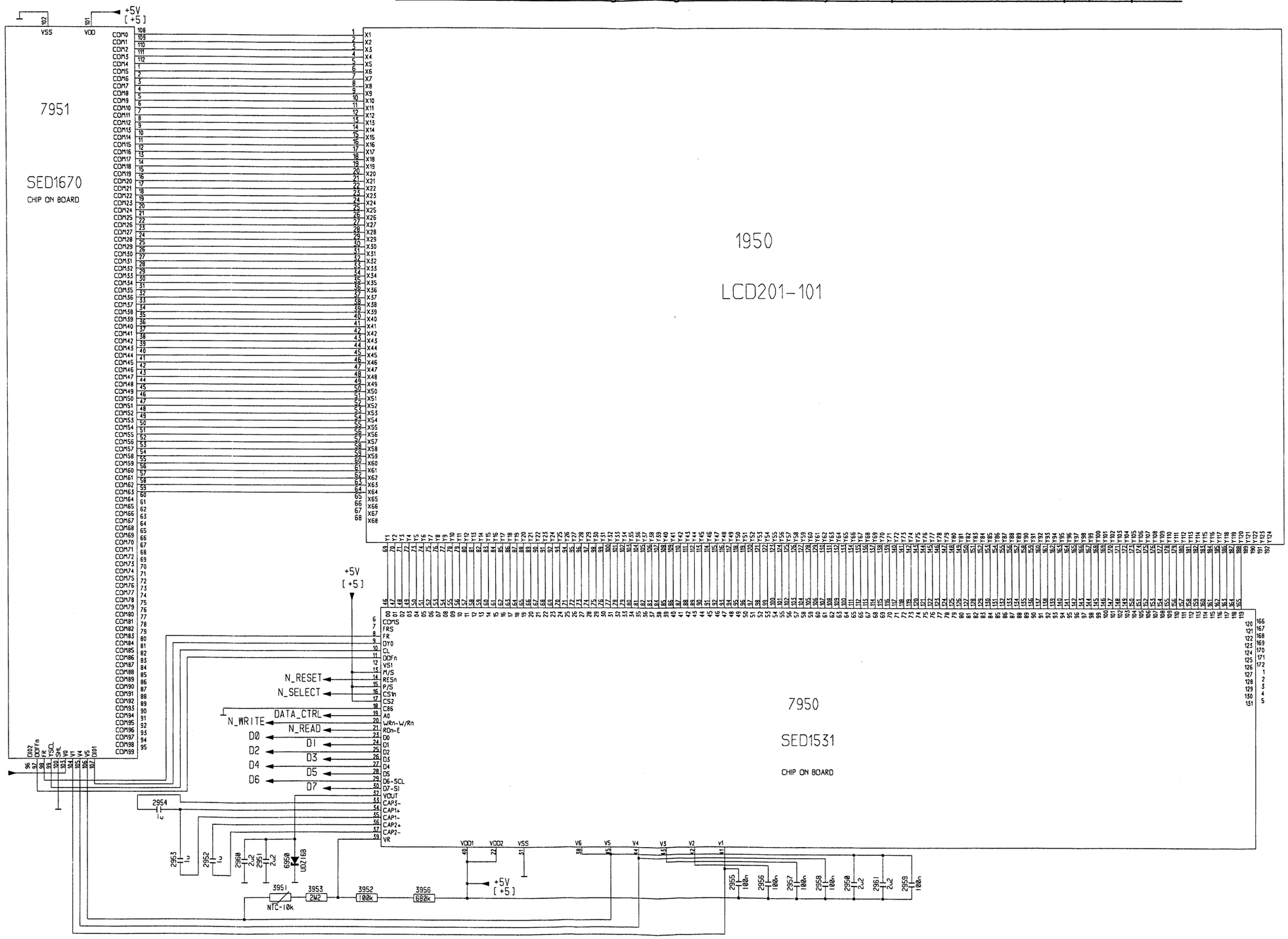

WARNING: The front schematic diagrams are given for information only. The complete front itself is a service part, not repairable.

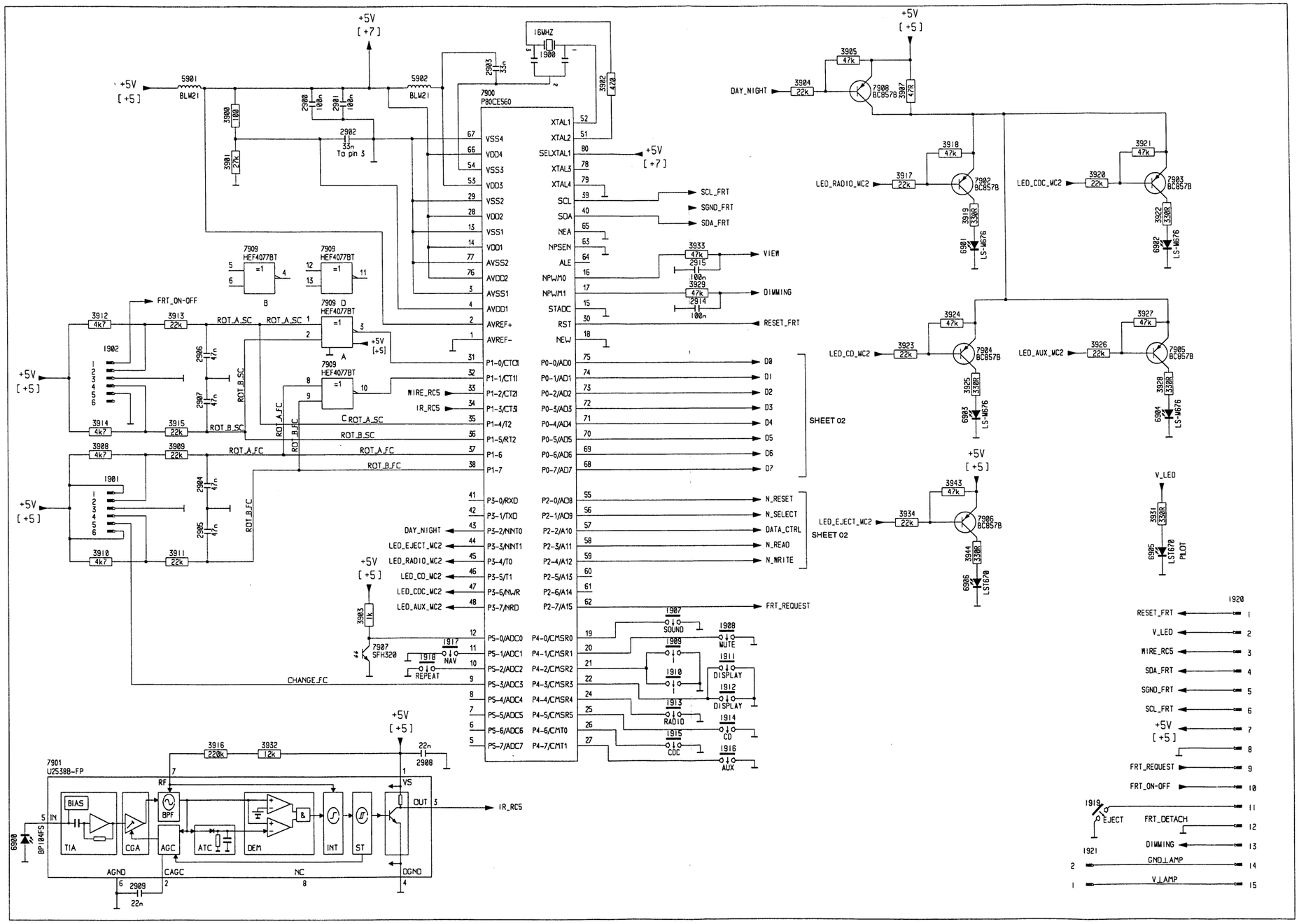

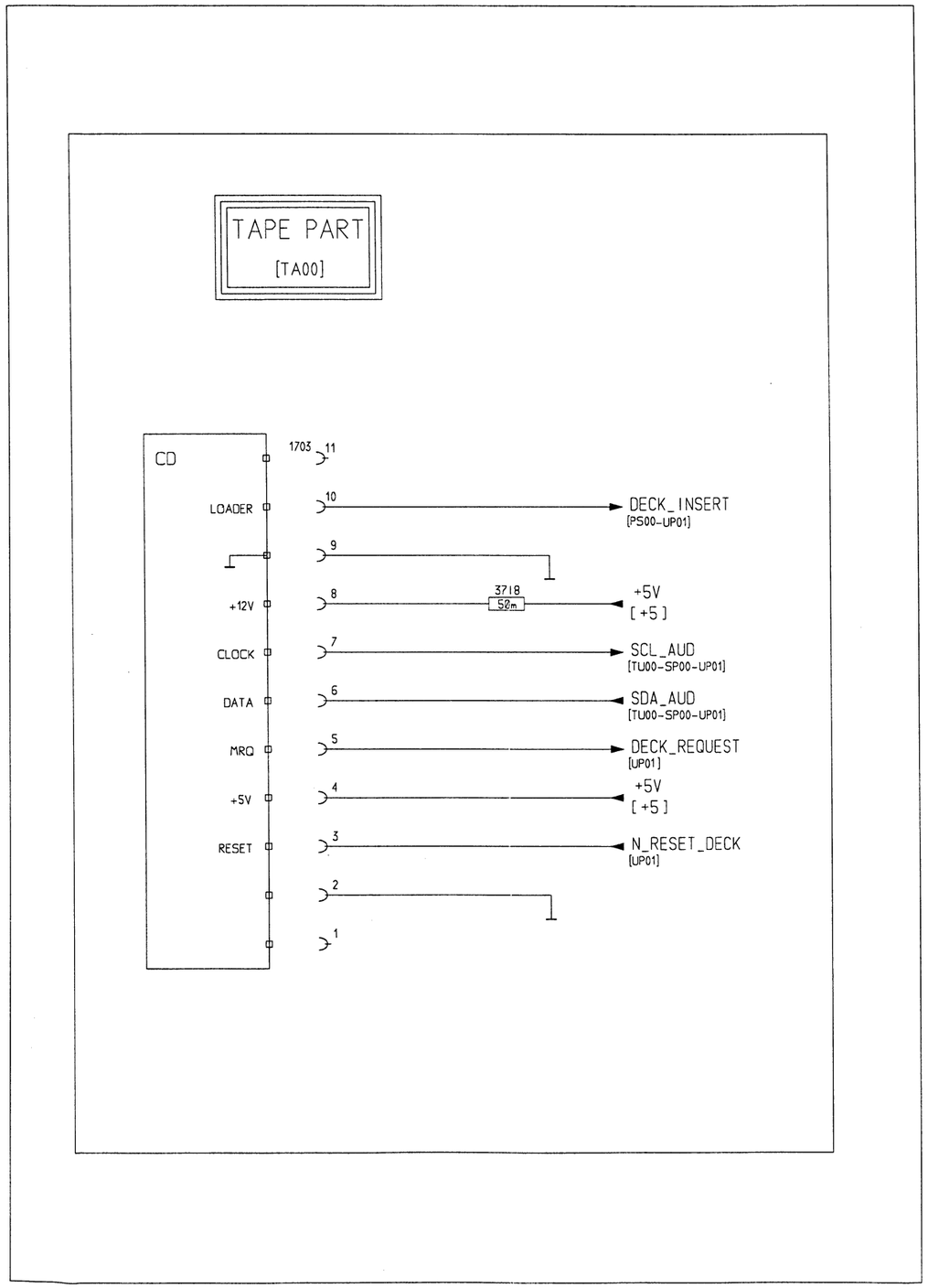
TAPE PART
[TA00]
CD
LOADER
+12V
CLOCK
DATA
MRQ
+5V
RESET
1703
11
10
9
8
7
6
5
4
3
2
1
3718
50m
DECK_INSERT
[PS00-UP01]
+5V
[+5]
SCL_AUD
[TU00-SP00-UP01]
SDA_AUD
[TU00-SP00-UP01]
DECK_REQUEST
[UP01]
+5V
[+5]
N_RESET_DECK
[UP01]

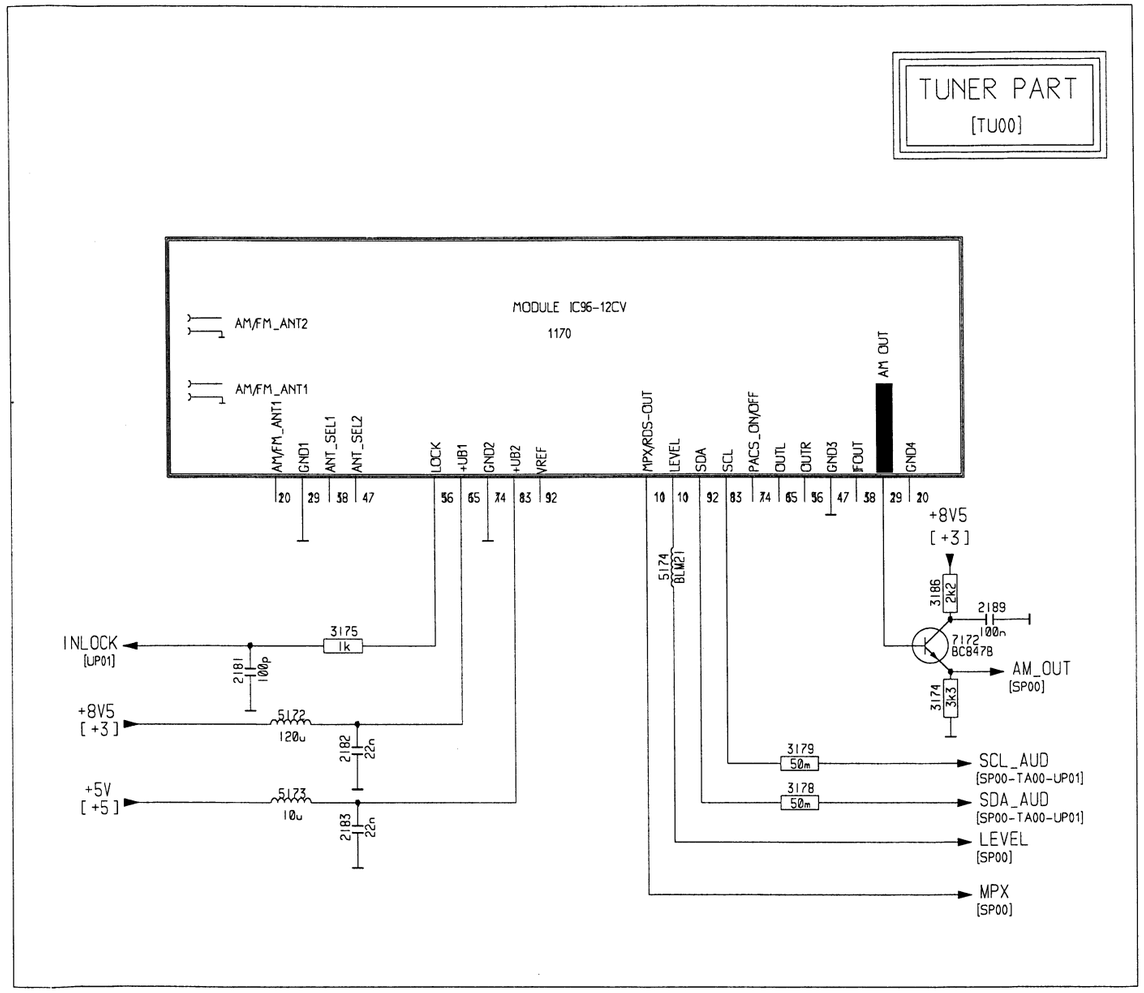
TUNER PART
[TU00]
MODULE IC96-12CV
1170
AM/FM_ANT2
AM/FM_ANT1
AM/FM_ANT1
GND1
ANT_SEL1
ANT_SEL2
LOCK
+UB1
GND2
+UB2
VREF
MPX/RDS-OUT
LEVEL
SDA
SCL
PACS_ON/OFF
OUTL
OUTR
GND3
IFOUT
AM OUT
GND4
20
29
38
47
56
65
74
83
92
10
10
92
83
74
65
56
47
38
29
20
+8V5
[+3]
3186
2k2
2189
100n
7172
BC847B
AM_OUT
[SP00]
3174
3k3
INLOCK
[UP01]
3175
1k
2181
100p
+8V5
[+3]
5172
120u
2182
22n
+5V
[+5]
5173
10u
2183
22n
5174
BLM21
3179
50m
SCL_AUD
[SP00-TA00-UP01]
3178
50m
SDA_AUD
[SP00-TA00-UP01]
LEVEL
[SP00]
MPX
[SP00]

CONNECTOR BLOCK SCHEMATIC DIAGRAM

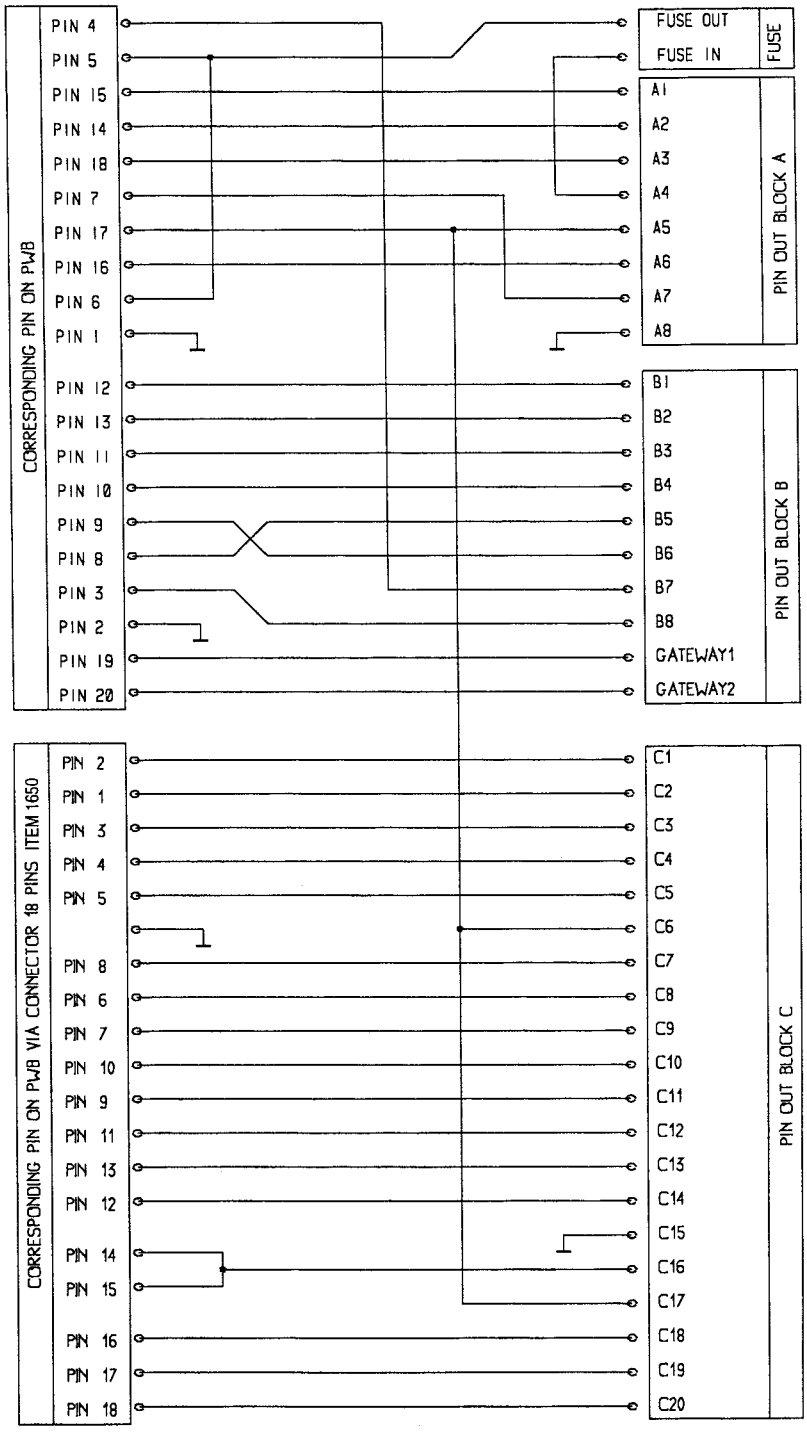

2RC959/00

PCS 98 507

SAA1305T

Short description

The SAA1305T is an on/off logic IC which can be used in a car radio to interface between a microprocessor and various input signals such as: Ignition, low supply detection, on/off key, external control signals. It contains 8 inputs with accurate schmitt triggers and clamp circuits. The main function of this IC is an intelligent I/O expander with 2 modes of operation:

1- Normal I/O expander. The uP (master) is running, SAA1305T acts as a slave.
2- Sleep mode of set: the uP is stopped, SAA1305T acts like a master. During an event, the uP is awakened.

The communication with the IC is done via I2C bus.
Extra functions of the SAA1305T are:

-) Blinking LED generator
-) One day clock
-) Watch dog mode

Features

- 8 inputs with accurate schmitt triggers and clamp circuits.
- Ultra low quiescent current.
- Reset generator circuit.
- Changed info output.
- On/off output for controlling a regulator IC which supplies the uP.
- 32KHz RC oscillator and/or a 32KHz X-tal oscillator.
- No delayed reset needed (start-up behaviour oscillator fixed by internal logic)
- Watch dog function.
- Blinking LED oscillator with drive circuit for LED.
- Clock function.

Pinning:

PIN	DESCRIPTION	FUNCTIONAL DESCRIPTION
1 to 8	Input 0 to input 7	All 8 inputs generate resets on pin RESET-PULSE and a low level on pin CHANGE-INFO
9	ON/OFF	Output signal for switched power supply version or A/D supply from uC
10	RESET-IN	Power On or system reset for the IC
11	WATCH-TRIGGER	Input pin for trigger signal form the uC for the hardware watchdog
12	TIMER-START	Trigger input for a 250ms timer (V_LOW timer)
13	TEST-PIN	test pin. This pin must be connected to ground
14	RC-OUT	In/Outputs for the 32.768 KHz RC oscillator
15	RC-IN	
16	X-TAL OUT	In/Outputs for the 32.768 KHz oscillator
17	X-TAL IN	
18	SDA	I2C serial connection to the uC for INPU/clock reading and device control
19	VSS	
20	SCL	I2C serial connection to the uC for INPU/clock reading and device control
21	VDD	
22	LES-OUTPUT	Drives a LED up to 20mA (switch to 5V supply)
23	RESET-PULSE	Reset output (pulse)
24	CHANGE-INFO	A change on any none masked INPUT, a device reset, an alarm or V_LOW timer event, an oscillator fault or a failed I2C read sequence after a change info signal, a failed watchdog trigger sequence, results in a low on this output

A5	B1	FRT_EJECT	H3	RESET_IN	F1/K6	V_LOW	E1/H4
ANTENNA_ON	A1	FRT_ON-OFF	I3	RESET_MC0	I12	V_LOW_TIMER	I9
CHANGE_INFO	H9	NO_POWER	G1	SCL_EE0	J3	WATCHDOG	J9
DECK_INSERT	I3	POWER	D16	SDA_EE0	J3		
FLAP_DOWN	I3	POWER_MUTE	J16	SET_ON	A16		
FRT_DETACH	I3	POWER_SENSE	C16	TEL_MUTE	I4		

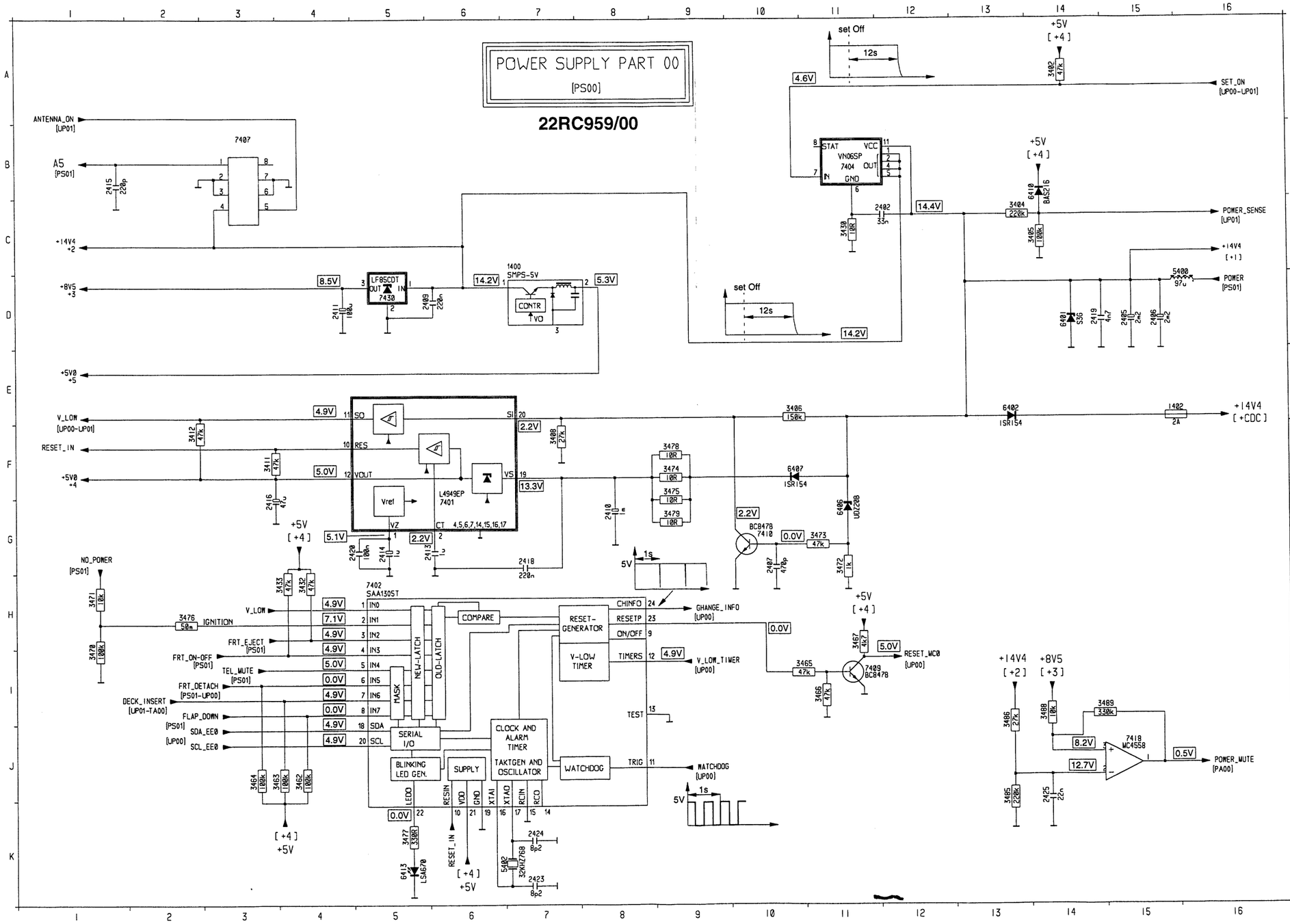

A1	C1/F7	B2	E7	B8	B7	FRT_ON-OFF	F14	RESET_FRT	A14
A2	E7	B3	D7	DIMMING	H14/H7	FRT_REQUEST	F14	SCL_FRT	D13
A3	F7	B4	D7	EL_ON	J9	ILLUM	C11	SCL_G	G5
A5	F7	B5	C7	FLAP_DOWN	K15	ILLUM_DECK	J5	SDA_FRT	C13
A6	A10/F5	B6	D7	FRT_DETACH	G14	NO_POWER	C5	SDA_G	G5
B1	E7	B7	B7	FRT_EJECT	G14	POWER	C5	TEL_MUTE	C3

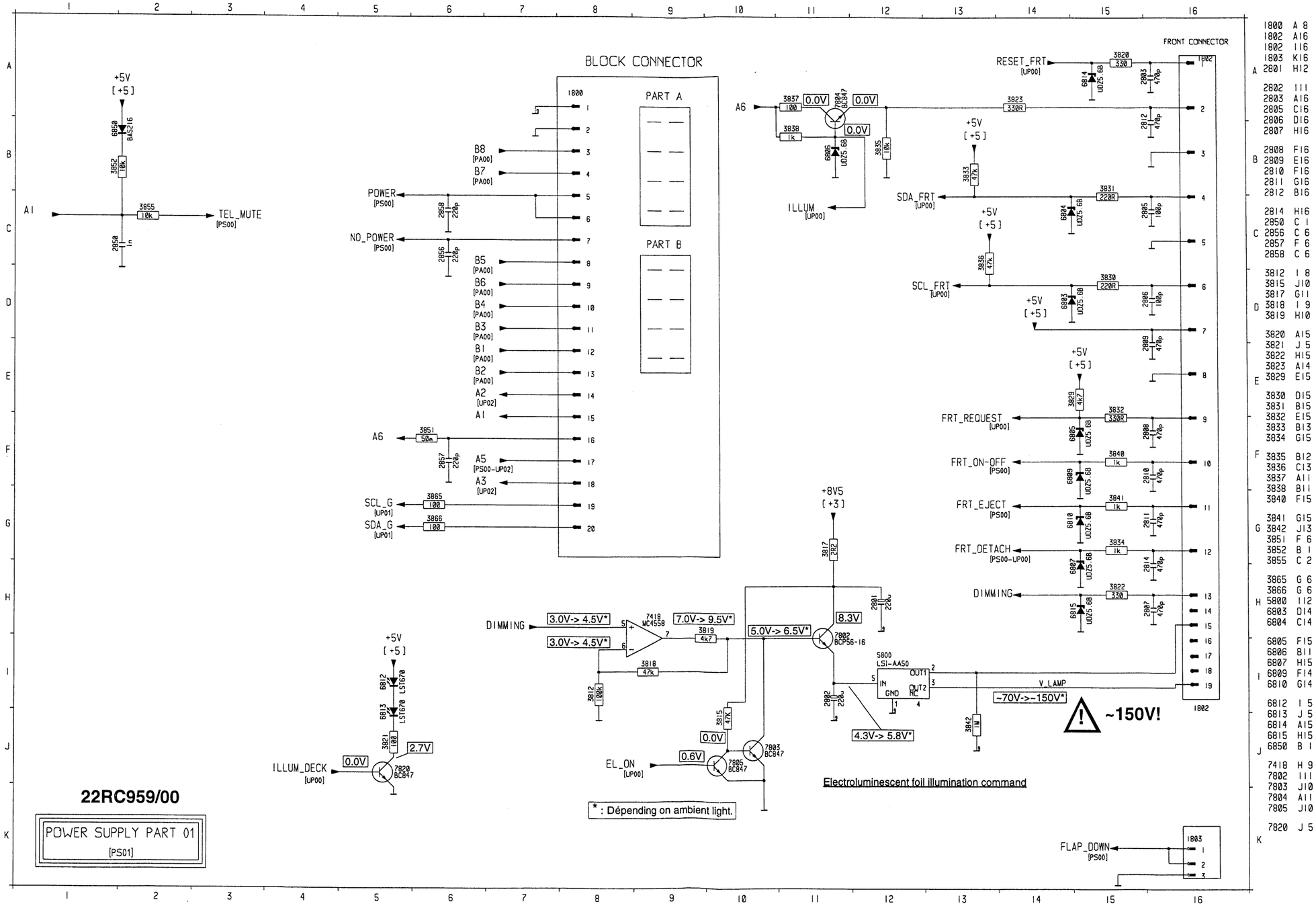

AM_OUT	F3	CD_WS	H10	MPX	G3	RDS_MUTE	A11
AUX_L	E2/j7	CLOCK_RDS	I8	MPX_RDS	C3	RL	F17
AUX_R	D2/k7	DATA_RDS	I8	N_RESET_AUD	I12	RR	F17
CARIN_IN	D17	FL	D17	PAUSE	A12	SCL_AUD	I12
CD_CL	H9	FR	E17	POM	C17	SDA_AUD	I12
CD_DATA	H10	LEVEL	D2	RDS_HOLD	A11	TEL_SELECT	I4

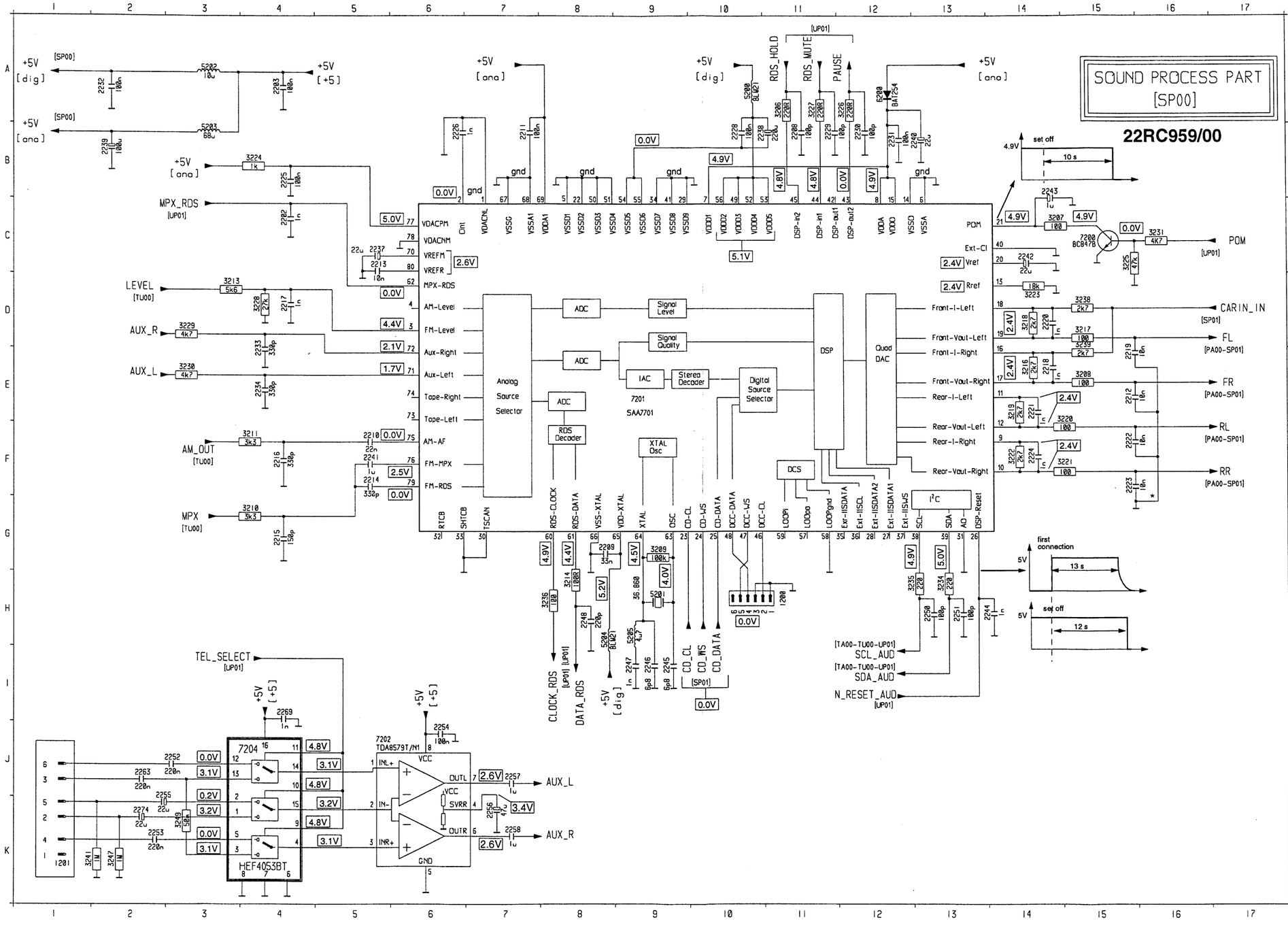

22RC959/00 PWB LAYOUT - TOPSIDE VIEW

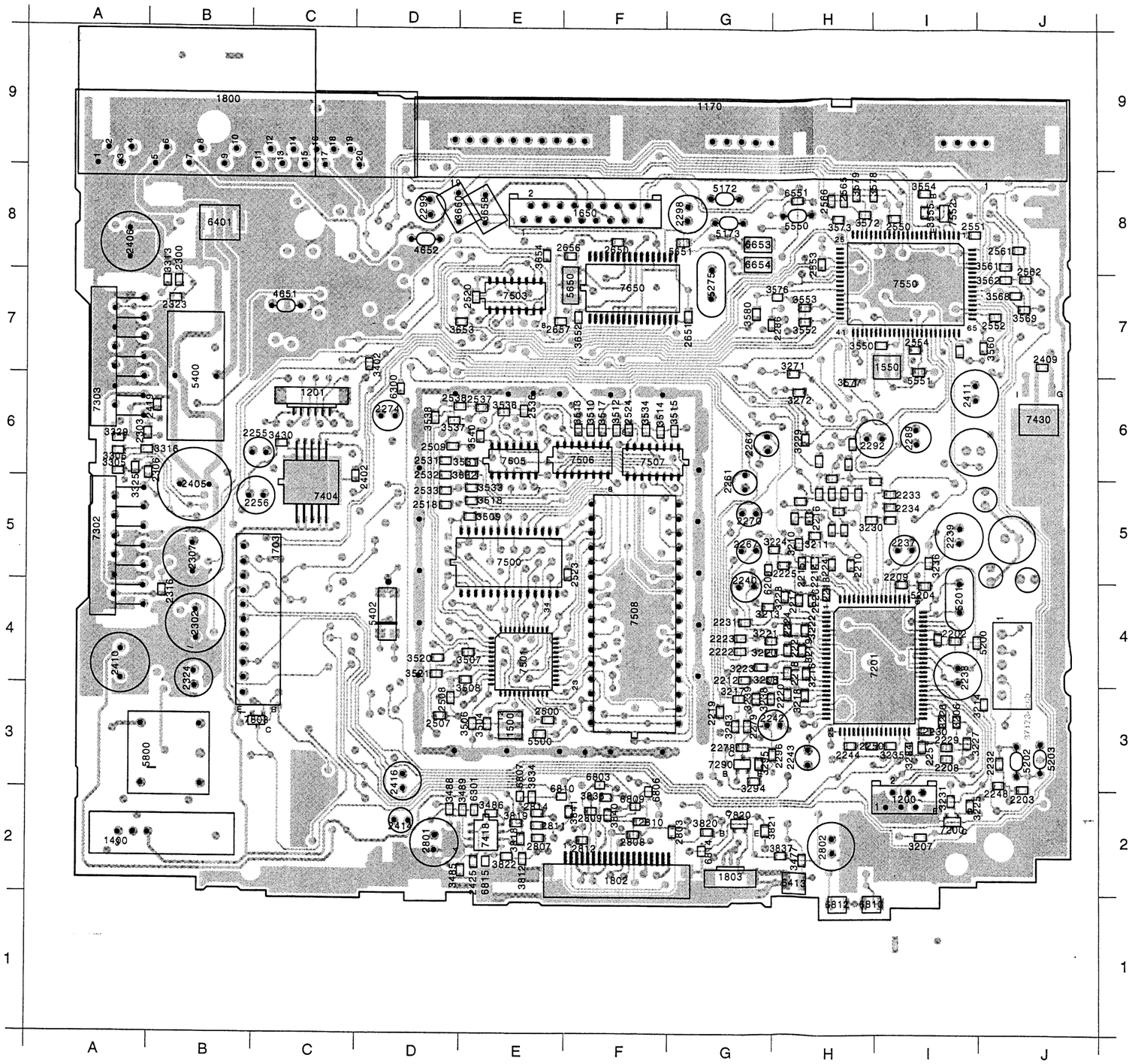

1170 G 8	2414 D 2	3316 A 5	5500 E 2
1200 I 2	2416 D 2	3325 A 5	5550 H 7
1201 C 6	2419 B 6	3329 A 5	5551 I 6
1400 B 1	2425 E 1	3402 D 6	5650 F 7
1500 E 2	2500 E 2	3430 C 5	5651 G 7
1550 I 6	2507 D 3	3477 H 1	5800 B 2
1650 F 7	2508 D 3	3485 E 1	6200 G 4
1703 B 3	2509 D 5	3486 E 2	6300 D 6
1800 B 8	2518 D 5	3488 D 2	6301 E 2
1802 F 1	2520 E 7	3489 E 2	6401 B 7
1803 G 1	2523 F 4	3504 E 2	6413 H 1
2202 I 3	2524 F 5	3506 E 2	6551 H 8
2203 J 2	2531 D 5	3507 E 3	6653 G 7
2208 I 2	2532 D 5	3508 E 3	6654 G 7
2209 I 4	2533 D 5	3509 E 4	6803 F 2
2210 H 4	2536 E 5	3510 F 5	6806 F 2
2212 G 3	2537 E 6	3512 F 5	6807 E 2
2213 H 4	2538 D 6	3513 F 5	6809 F 2
2214 H 4	2550 I 7	3514 F 5	6810 E 2
2215 H 4	2551 I 7	3515 G 5	6812 H 1
2216 H 4	2552 J 6	3517 F 5	6813 H 1
2217 H 4	2553 H 7	3518 E 5	6814 G 1
2218 H 3	2554 I 6	3520 D 3	6815 E 1
2219 G 3	2561 J 7	3521 D 3	7200 I 2
2220 H 3	2562 J 7	3531 E 5	7201 H 3
2221 H 3	2565 H 8	3532 E 5	7290 G 2
2222 G 3	2566 H 8	3533 E 5	7302 A 4
2223 G 3	2650 F 7	3534 F 5	7303 A 6
2224 H 3	2651 G 6	3536 E 5	7404 C 5
2225 H 4	2656 F 7	3537 D 5	7418 E 1
2226 H 4	2657 E 6	3538 D 5	7430 J 5
2229 I 2	2801 D 1	3540 E 5	7500 E 4
2230 I 2	2802 H 1	3550 I 6	7501 E 3
2231 G 3	2803 G 1	3552 H 6	7503 E 7
2232 J 2	2807 E 1	3553 H 6	7505 E 5
2233 I 5	2808 F 1	3554 I 8	7506 F 5
2234 I 5	2809 F 2	3555 I 7	7507 F 5
2237 I 4	2810 F 2	3560 J 6	7508 F 4
2238 I 3	2811 E 1	3561 J 7	7550 I 7
2239 I 4	2812 F 1	3562 J 7	7552 I 7
2240 G 4	2814 E 2	3568 J 7	7650 F 7
2241 H 4	3206 I 2	3569 J 6	7803 C 2
2242 H 2	3207 I 1	3572 H 7	7820 G 2
2243 H 2	3208 G 3	3573 H 7	
2244 H 2	3210 H 4	3576 H 7	
2248 J 2	3211 H 4	3577 H 6	
2250 H 2	3213 G 4	3578 H 8	
2251 I 2	3214 J 3	3579 H 8	
2255 C 5	3216 H 3	3580 G 6	
2256 C 5	3217 G 3	3652 F 6	
2261 G 5	3218 H 3	3653 E 6	
2264 G 5	3219 H 3	3654 E 7	
2267 G 4	3220 G 3	3658 E 7	
2270 G 4	3221 G 3	3660 D 7	
2274 D 5	3222 H 3	3812 E 1	
2278 G 2	3223 G 3	3818 E 1	
2279 G 2	3224 H 4	3819 E 2	
2286 G 6	3225 I 2	3820 G 1	
2289 I 5	3226 I 2	3821 G 1	
2292 H 5	3227 I 2	3822 E 1	
2296 G 2	3228 H 4	3834 E 2	
2298 G 7	3229 H 5	3836 F 2	
2299 D 7	3230 H 4	3837 H 1	
2300 B 7	3231 I 2	3840 F 2	
2302 B 3	3234 I 2	3841 F 2	
2303 A 5	3235 I 2	4651 C 6	
2306 A 5	3236 I 4	4652 D 7	
2307 B 4	3238 G 3	5172 G 8	
2316 B 4	3239 G 3	5173 G 7	
2323 B 7	3271 H 6	5200 I 3	
2324 B 3	3272 H 6	5201 I 4	
2402 C 5	3293 G 2	5202 J 2	
2405 B 5	3294 G 2	5203 J 2	
2406 A 7	3295 G 2	5204 I 4	
2409 J 6	3305 A 5	5275 G 7	
2410 A 3	3306 A 5	5400 B 6	
2411 I 6	3313 B 7	5402 D 4	

22RC959/00 PWB LAYOUT - BOTTOMSIDE VIEW

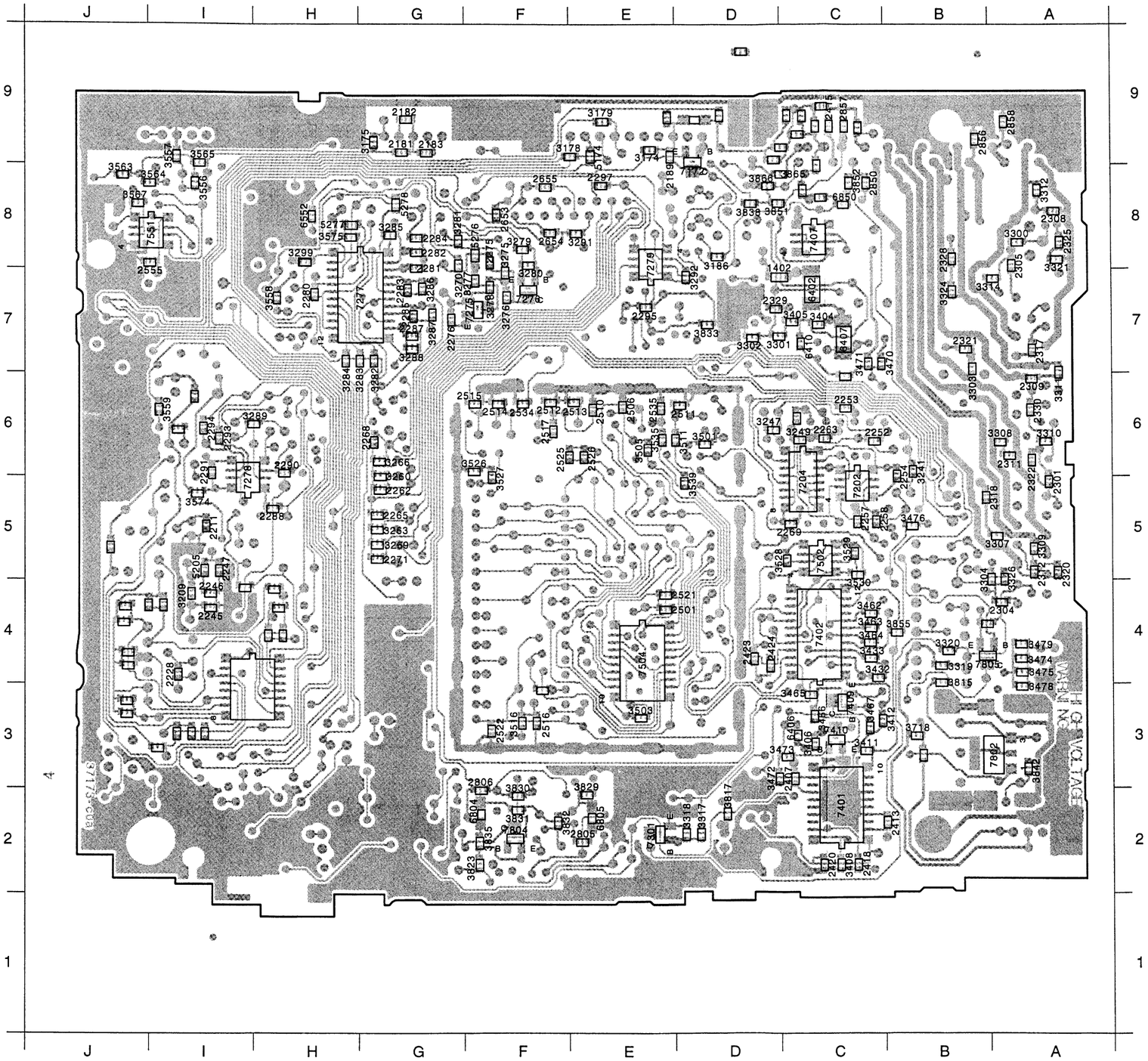

1402 D 7
2181 G 8
2182 G 8
2183 G 8
2189 E 8

2211 I 4
2228 I 3
2245 I 4
2246 I 4
2247 I 4

2252 C 5
2253 C 5
2254 C 5
2257 C 4
2258 C 4

2262 H 5
2263 C 5
2265 H 4
2268 H 5
2269 D 4

2271 H 4
2275 F 7
2276 G 6
2280 H 7
2281 G 7

2282 G 7
2283 G 7
2284 G 7
2285 G 6
2287 G 6

2288 I 5
2290 H 5
2291 I 5
2293 I 5
2294 I 5

2295 E 6
2297 E 8
2301 A 5
2304 B 4
2305 A 7

2308 A 7
2309 A 6
2311 B 5
2312 A 4
2317 A 6

2318 B 5
2320 A 4
2321 B 6
2322 A 5
2325 A 7

2328 B 7
2329 D 6
2330 A 5
2407 D 2
2413 C 1

2415 C 8
2418 C 1
2420 C 1
2423 D 3
2424 D 3

2501 E 4
2506 E 5
2510 E 5
2511 E 6
2512 F 6

2513 F 6
2514 F 6
2515 G 6
2516 F 2
2517 F 5

2521 E 4
2522 F 2
2525 F 5
2526 F 5
2534 F 6

2535 E 5
2555 J 7

2653 F 7
2654 F 7
2655 F 8
2805 F 1
2806 G 2

2850 C 8
2856 B 8
2857 C 8
2858 B 8
3174 E 8

3175 H 8
3178 F 8
3179 E 8
3186 D 7
3209 I 4

3241 B 5
3247 D 5
3249 D 5
3260 H 5
3263 H 4

3266 H 5
3269 H 4
3270 G 7
3275 F 7
3276 F 7

3277 G 7
3278 F 7
3279 F 7
3280 F 7
3281 G 7

3282 H 6
3283 H 6
3284 H 6
3285 G 7
3286 G 7

3287 G 6
3288 G 6
3289 I 5
3291 F 7
3292 E 7

3299 H 7
3300 A 7
3301 D 6
3302 D 6
3303 B 6

3304 B 4
3307 B 4
3308 B 5
3309 A 4
3310 A 5

3311 A 6
3312 A 8
3314 B 7
3317 D 1
3318 E 1

3319 B 3
3320 B 3
3321 A 7
3324 B 7
3326 B 4

3404 C 6
3405 D 6
3406 C 2
3408 C 1
3411 C 2

3412 C 2
3432 C 3
3433 C 3
3462 C 3
3463 C 3

3464 C 3
3465 C 3
3466 C 3
3467 C 2
3470 C 6

3471 C 6
3472 D 2
3473 D 2
3474 A 3
3475 A 3

3476 B 4
3478 A 3
3479 A 3
3501 D 5
3503 E 2

3505 E 5
3511 E 5
3516 F 2
3526 G 5
3527 F 5

3528 D 4
3529 C 4
3530 C 4
3535 E 5
3539 E 5

3556 I 8
3557 I 8
3558 H 7
3559 J 5
3563 J 8

3564 J 8
3565 I 8
3567 J 7
3574 I 5
3575 H 7

3718 B 2
3815 B 3
3817 D 2
3823 G 1
3829 F 2

3830 F 2
3831 F 2
3832 F 1
3833 D 6
3835 G 1

3838 D 7
3842 A 2
3851 D 7
3852 C 8
3855 C 3

3865 D 8
3866 D 8
4999 D 9
5174 F 8
5205 I 4

5276 G 7
5277 H 7
5278 G 7
6402 C 7
6406 D 2

6407 C 6
6410 D 6
6552 H 7
6804 G 2
6805 F 2

6850 C 7
7172 E 8
7202 C 5
7204 D 5
7275 G 6

7276 F 7
7277 H 7
7278 I 5
7279 E 7
7301 E 1

7401 C 2
7402 C 3
7407 C 7
7409 C 3
7410 C 2

7502 C 4
7504 E 3
7551 J 7
7802 B 2
7804 F 1

7805 B 3

CARIN_AUD	C9	CDC_REF	F1	CD_WS	C4	LO_RR	G11
CARIN_IN	F11	CDC_RIGHT	G1	FL	F6	RL	F9
CARIN_MUTE	F7	CD_CL	C4	FR	G6	RR	G9
CARIN_REF	D8	CD_DATA	B4	LO_FL	F7		
CDC_LEFT	E1	CD_L	B9/F5	LO_FR	G7		
CDC_ON	A1	CD_R	C9/F5	LO_RL	F11		

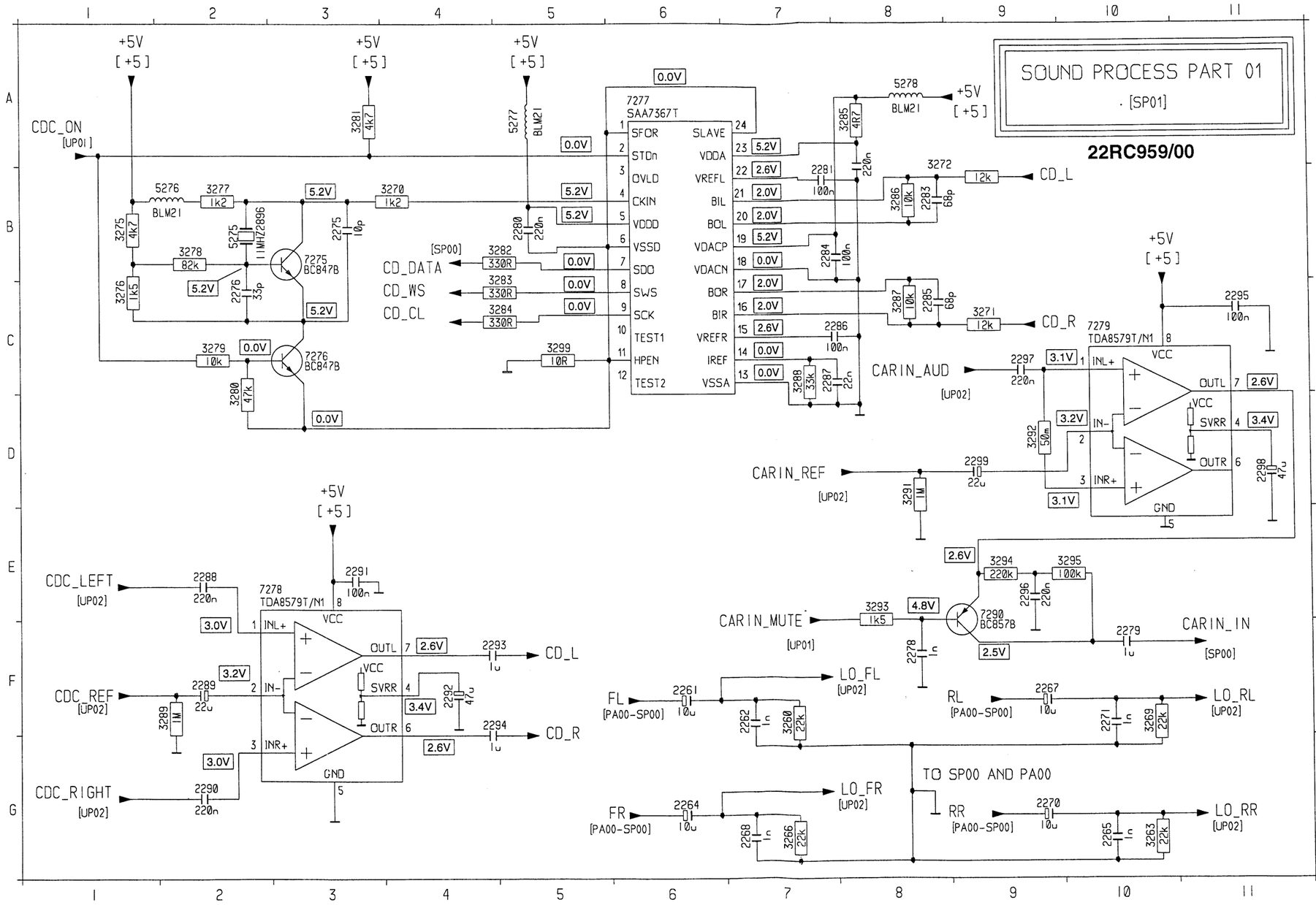

2261	F 6	3277	B 2		
2262	F 7	3278	B 2		
2264	G 6	3279	C 2		
2265	G10	3280	C 2		
2267	F 9	3281	A 3		
2268	G 7	3282	B 5		
2270	G 9	3283	C 5		
2271	F10	3284	C 5		
2275	B 3	3285	A 7		
2276	C 2	3286	B 8		
2278	F 8	3287	C 8		
2279	F10	3288	C 7		
2280	B 5	3289	F 2		
2281	B 7	3291	D 8		
2283	B 8	3292	D 9		
2284	B 7	3293	E 8		
2285	C 8	3294	E 9		
2286	C 7	3295	E10		
2287	C 7	3299	C 5		
2288	E 2	5275	B 2		
2289	F 2	5276	B 2		
2290	G 2	5277	A 5		
2291	E 3	5278	A 8		
2292	F 4	7275	B 3		
2293	F 4	7276	C 3		
2294	F 4	7277	A 6		
2295	C11	7278	E 2		
2296	E 9	7279	C10		
2297	C 9	7290	E 9		
2298	D11				
2299	D 9				
3260	F 7				
3263	G10				
3266	G 7				
3269	F10				
3270	B 4				
3271	C 8				
3272	B 8				
3275	B 1				
3276	C 1				

B1	C16	B7	I16	RL	J1
B2	D16	B8	J16	RR	C1
B3	D16	FL	H1	SI	A5/B8/G8
B4	E16	FR	E1	TEMP_SENSE	K1
B5	H16	MC_MUTE	B1		
B6	I16	POWER_MUTE	B1		

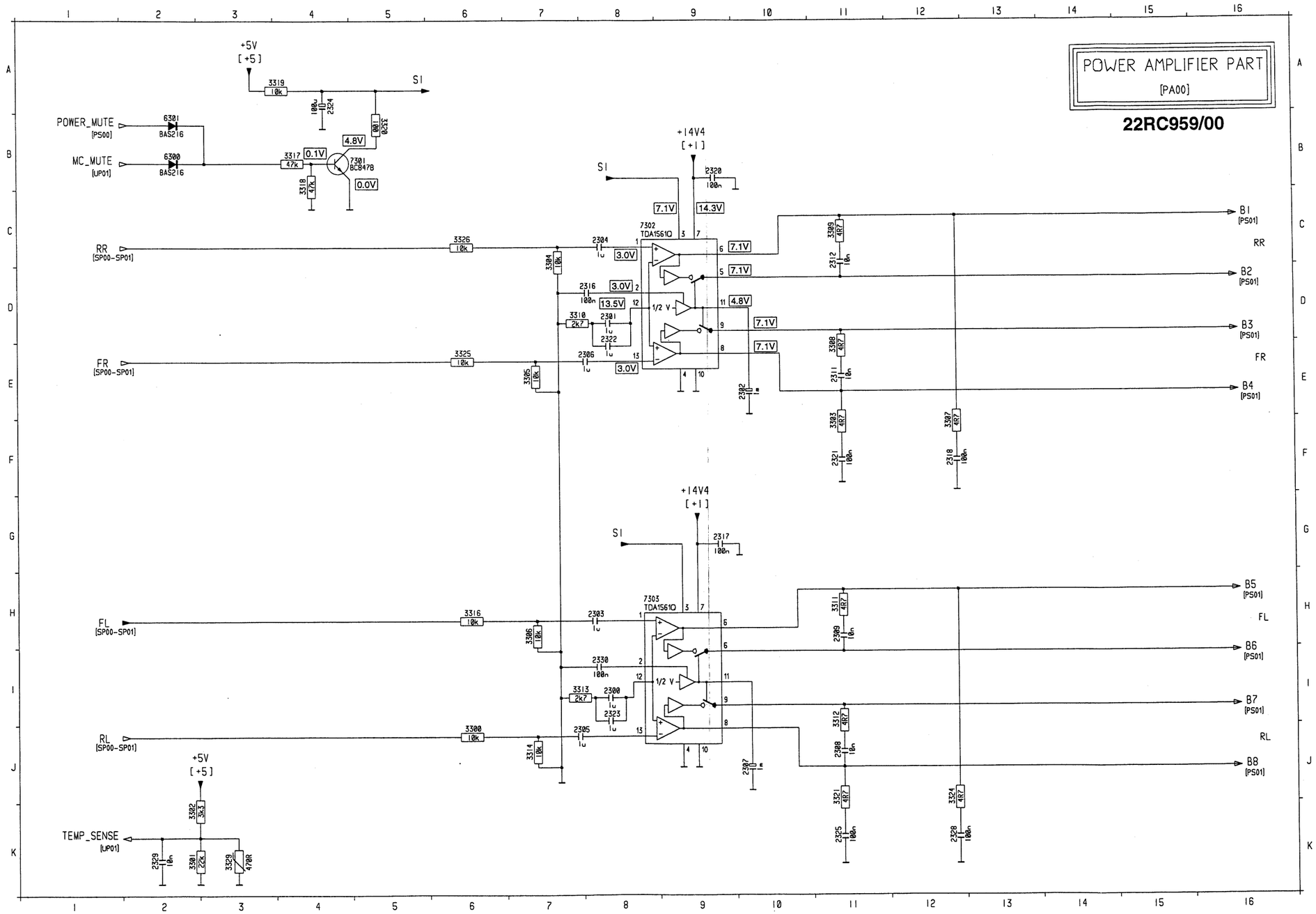

2300	I 8	
2301	D 8	
2302	E10	
2303	H 8	
2304	C 8	
2305	J 7	
2306	E 8	
2307	J10	
2308	J11	
2309	H11	
2311	E11	
2312	C11	
2316	D 8	
2317	G 9	
2318	F12	
2320	B 9	
2321	F11	
2322	D 8	
2323	I 8	
2324	A 4	
2325	K11	
2328	K12	
2329	K 2	
2330	I 8	
3300	J 6	
3301	K 2	
3302	K 2	
3303	F11	
3304	C 7	
3305	E 7	
3306	H 7	
3307	F12	
3308	E11	
3309	C11	
3310	D 7	
3311	H11	
3312	I11	
3313	I 7	
3314	J 7	
3316	H 6	
3317	B 4	
3318	B 4	
3319	A 4	
3320	B 5	
3321	J11	
3324	J12	
3325	E 6	
3326	C 6	
3329	K 3	
6300	B 2	
6301	B 2	
7301	B 5	
7302	C 8	
7303	H 8	

CHANGE_INFO.....E1
D2B_REQUEST.....E1
EL_ON.....I12
FRT_REQUEST.....K13
ILLUM.....K13
ILLUM_DECK.....L12
MCI_REQUEST.....J13
MCI_WORKING.....J13
N_RESET_D2B.....K12
READ_IO.....H14/J8
RESET_DEV.....F1
RESET_FRT.....K12
RESET_MC0.....C1/I9
SCL_D2B.....B9
SCL_DEV.....B9
SCL_EE0.....B9/K4
SCL_FRT.....C9
SDA_D2B.....D9
SDA_DEV.....C9
SDA_EE0.....C9/K4
SDA_FRT.....D9
SET_ON.....L12
ST_BY.....B11/J12
V_LOW.....I13
V_LOW_TIMER.....I12
WATCHDOG.....J12

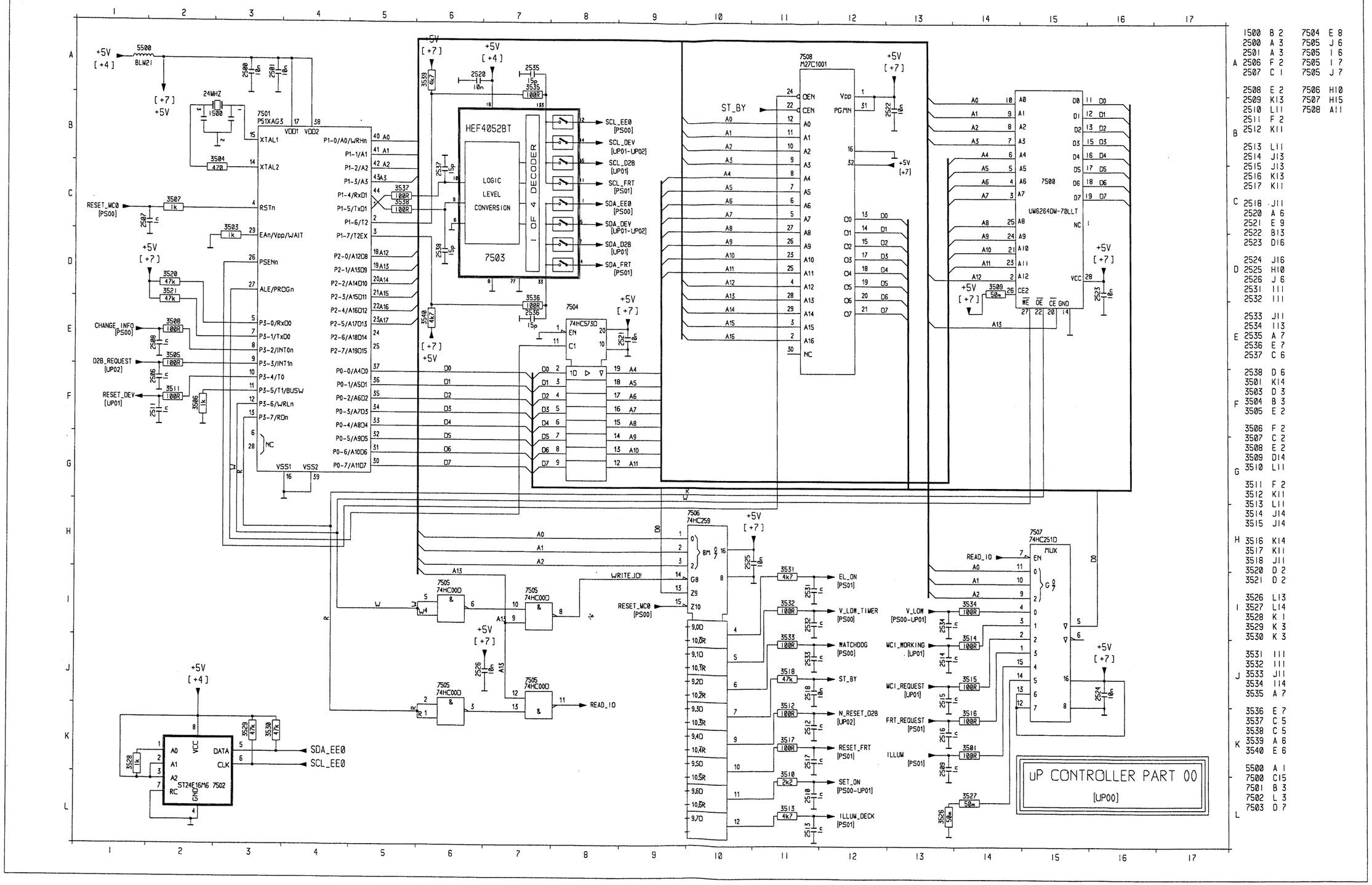

1500	B 2			7504	E 8		
2500	A 3			7505	J 6		
2501	A 3			7505	I 6		
A 2506	F 2			7505	I 7		
2507	C 1			7505	J 7		
2508	E 2			7506	H10		
2509	K13			7507	H15		
2510	L11			7508	A11		
2511	F 2						
B 2512	K11						
2513	L11						
2514	J13						
2515	J13						
2516	K13						
2517	K11						
C 2518	J11						
2520	A 6						
2521	E 9						
2522	B13						
2523	D16						
2524	J16						
D 2525	H10						
2526	J 6						
2531	I11						
2532	I11						
2533	J11						
2534	I13						
E 2535	A 7						
2536	E 7						
2537	C 6						
2538	D 6						
3501	K14						
3503	D 3						
F 3504	B 3						
3505	E 2						
3506	F 2						
3507	C 2						
3508	E 2						
3509	D14						
3510	L11						
G							
3511	F 2						
3512	K11						
3513	L11						
3514	J14						
3515	J14						
H 3516	K14						
3517	K11						
3518	J11						
3520	D 2						
3521	D 2						
3526	L13						
I 3527	L14						
3528	K 1						
3529	K 3						
3530	K 3						
3531	I11						
3532	I11						
J 3533	J11						
3534	I14						
3535	A 7						
3536	E 7						
3537	C 5						
3538	C 5						
3539	A 6						
K 3540	E 6						
5500	A 1						
7500	C15						
7501	B 3						
7502	L 3						
7503	D 7						
L							

74HC00D Quad 2-input nand gate

SYMBOL	PIN	DESCRIPTION
1A to 4A	1, 4, 9, 12	data inputs
1B to 4B	2, 5, 10, 13	data inputs
1Y to 4Y	3, 6, 8, 11	data outputs
GND	7	Ground (0V)
VCC	14	positive supply voltage

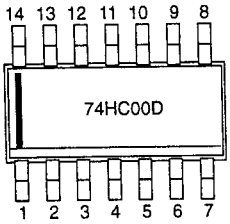

FUNCTION TABLE

INPUTS		OUTPUT
nA	nB	nY
L	L	H
L	H	H
H	L	H
H	H	L

74HC573D Octal D-type transparent latch; 3-state

SYMBOL	PIN	DESCRIPTION
$\overline{OE}$	1	3-state output enable input (active LOW)
D_0 to D_7	2 to 9	data inputs
GND	10	Ground (0V)
LE	11	latch enable input (active HIGH)
Q_7 to Q_0	12 to 19	3-state latch outputs
V_{CC}	20	positive supply voltage

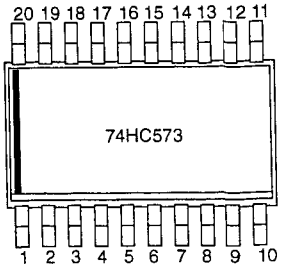

HEF4052B Dual 4 channel analogue multi/demultiplexer

SYMBOL	PIN	DESCRIPTION
Y_{0A} to Y_{3A}	12, 14, 15, 11	independent inputs/outputs
Y_{0B} to Y_{3B}	1, 2, 5, 4	independent inputs/outputs
A_0, A_1	10, 9	address inputs
$\overline{E}$	6	enable input (active LOW)
Z_A, Z_B	13, 3	common inputs/outputs
V_{SS}	8	Ground (0V)
V_{DD}	16	positive supply voltage

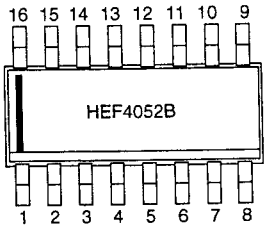

FUNCTION TABLE

INPUTS			channel ON
$\overline{E}$	A_1	A_0	
L	L	L	Y_{0A}-Z_A; Y_{0B}-Z_B
L	L	H	Y_{1A}-Z_A; Y_{1B}-Z_B
L	H	L	Y_{2A}-Z_A; Y_{2B}-Z_B
L	H	H	Y_{3A}-Z_A; Y_{3B}-Z_B
H	X	X	none

74HC251D 8-input multiplexer; 3-state

SYMBOL	PIN	DESCRIPTION
I_0 to I_7	4,3,2,1,15,14,13,12	Multiplexer inputs
Y	5	Multiplexer output
$\overline{Y}$	6	Complementary multiplexer output
$\overline{OE}$	7	3-state output enable input (active LOW)
GND	8	Ground
S_0, S_1, S_2	11, 10, 9	select inputs
V_{CC}	16	Positive supply voltage

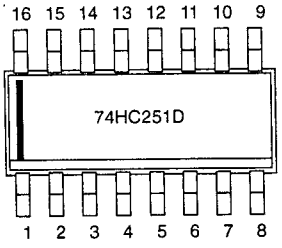

FUNCTION TABLE

INPUTS												OUTPUTS	
$\overline{OE}$	S_2	S_1	S_0	I_0	I_1	I_2	I_3	I_4	I_5	I_6	I_7	$\overline{Y}$	Y
H	X	X	X	X	X	X	X	X	X	X	X	Z	Z
L	L	L	L	L	X	X	X	X	X	X	X	H	L
L	L	L	L	H	X	X	X	X	X	X	X	L	H
L	L	L	H	X	L	X	X	X	X	X	X	H	L
L	L	L	H	X	H	X	X	X	X	X	X	L	H
L	L	H	L	X	X	L	X	X	X	X	X	H	L
L	L	H	L	X	X	H	X	X	X	X	X	L	H
L	L	H	H	X	X	X	L	X	X	X	X	H	L
L	L	H	H	X	X	X	H	X	X	X	X	L	H
L	H	L	L	X	X	X	X	L	X	X	X	H	L
L	H	L	L	X	X	X	X	H	X	X	X	L	H
L	H	L	H	X	X	X	X	X	L	X	X	H	L
L	H	L	H	X	X	X	X	X	H	X	X	L	H
L	H	H	L	X	X	X	X	X	X	L	X	H	L
L	H	H	L	X	X	X	X	X	X	H	X	L	H
L	H	H	H	X	X	X	X	X	X	X	L	H	L
L	H	H	H	X	X	X	X	X	X	X	H	L	H

74HC259D 8-addressable latch

SYMBOL	PIN	DESCRIPTION
A_0 to A_2	1,2,3	Address inputs
Q_0 to Q_7	4, 5, 6, 7, 9, 10, 11, 12	Latch outputs
GND	8	Ground
D	13	Data input
$\overline{LE}$	14	latch enable input (active LOW)
$\overline{MR}$	15	conditional reset input(active LOW)
V_{CC}	16	Positive supply voltage

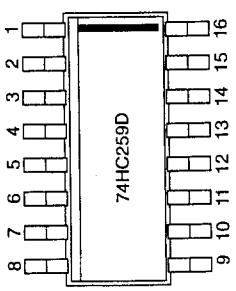

H=HIGH voltage level.
L= LOW voltage level.
X= don't care.
d= HIGH or LOW data one set-up time prior to the LOW-to-HIGH $\overline{LE}$ transition.
q= lower case letters indicate the state of the referenced output established during the last cycle in which it was addressed or cleared.

FUNCTION TABLE

OPERATING MODES	INPUTS						OUTPUTS							
	MR	LE	D	A0	A1	A2	Q0	Q1	Q2	Q3	Q4	Q5	Q6	Q7
master reset	L	H	X	X	X	X	L	L	L	L	L	L	L	L
demuliplex (active HIGH) decoder (when D=H)	L	L	d	L	L	L	Q=d	L	L	L	L	L	L	L
	L	L	d	H	L	L	L	Q=d	L	L	L	L	L	L
	L	L	d	L	H	L	L	L	Q=d	L	L	L	L	L
	L	L	d	H	H	L	L	L	L	Q=d	L	L	L	L
	L	L	d	L	L	H	L	L	L	L	Q=d	L	L	L
	L	L	d	H	L	H	L	L	L	L	L	Q=d	L	L
	L	L	d	L	H	H	L	L	L	L	L	L	Q=d	L
	L	L	d	H	H	H	L	L	L	L	L	L	L	Q=d
store (do nothing)	H	H	X	X	X	X	q_0	q_1	q_2	q_3	q_4	q_5	q_6	q_7
addressable latch	H	L	d	L	L	L	Q=d	q_1	q_2	q_3	q_4	q_5	q_6	q_6
	H	L	d	H	L	L	q_0	Q=d	q_2	q_3	q_4	q_5	q_6	q_6
	H	L	d	L	H	L	q_0	q_1	Q=d	q_3	q_4	q_5	q_6	q_6
	H	L	d	H	H	L	q_0	q_1	q_2	Q=d	q_4	q_5	q_6	q_6
	H	L	d	L	L	H	q_0	q_1	q_2	q_3	Q=d	q_5	q_6	q_6
	H	L	d	H	L	H	q_0	q_1	q_2	q_3	q_4	Q=d	q_6	q_6
	H	L	d	L	H	H	q_0	q_1	q_2	q_3	q_4	q_5	Q=d	q_6
	H	L	d	H	H	H	q_0	q_1	q_2	q_3	q_4	q_5	q_6	Q=d

DC voltages of microprocessor (FM mode, set tuned)

1	0.0V GND	41	N.C.
2	5.1V	42	N.C.
3	0.0V GND	43	4.8V
4	5.1V VDD	44	4.6V
5	4.4V	45	N.C.
6	N.C.	46	N.C.
7	N.C.	47	N.C.
8	N.C.	48	4.8V
9	N.C.	49	N.C.
10	0.5V	50	N.C.
11	0.8V	51	2.5V 16MHz
12	N.C.	52	2.1V 16MHz
13	0.0V GND	53	4.8V VDD
14	4.9 V VDD	54	0.0V
15	0.0V GND	55	4.8V
16	N.C.	56	4.8V
17	N.C.	57	4.9V
18	0.0V	58	4.8V
19	0.0V	59	0.0V
20	0.0V	60	0.0V
21	4.9V	61	N.C.
22	4.8V	62	N.C.
23	N.C.	63	N.C.
24	N.C.	64	N.C.
25	N.C.	65	4.8V
26	N.C.	66	4.8V VDD
27	N.C.	67	GND
28	5.0V VDD	68	0.0V
29	0.0V GND	69	0.0V
30	0.0V	70	0.0V
31	4.9V	71	5.0V
32	4.4V	72	4.9V
33	N.C.	73	5.1V
34	4.9V	74	5.2V
35	4.9V	75	5.2V
36	N.C.	76	4.9V VDD
37	4.8V	77	GND
38	4.9V	78	N.C.
39	4.8V	79	0.0V GND
40	4.8V	80	4.8V

ANTENNA_ON	F10	DECK_REQUEST	F3	N_RESET_AUD	F10	RDS_MUTE	H10	SDA_AUD	C15/G12	TEMP_SENSE	J3
CARIN_MUTE	H10	INLOCK	F10	N_RESET_DECK	G10	REMOTE	I3	SDA_DEV	D9	V_LOW	F3
CDC_ON	I10	MCI_REQUEST	G3	PAUSE	G10	RESET_DEV	E10	SDA_G	J11		
CLOCK_RDS	H10	MCI_WORKING	G3	POM	G10	SCL_AUD	C15/F13	SET_ON	H3		
DATA_RDS	F3	MC_MUTE	J8	POWER_SENSE	K3	SCL_DEV	D9	STANDBY_AUD	E3/I8		
DECK_INSERT	G3	MPX_RDS	H10	RDS_HOLD	H10	SCL_G	J11	TEL_SELECT	H3		

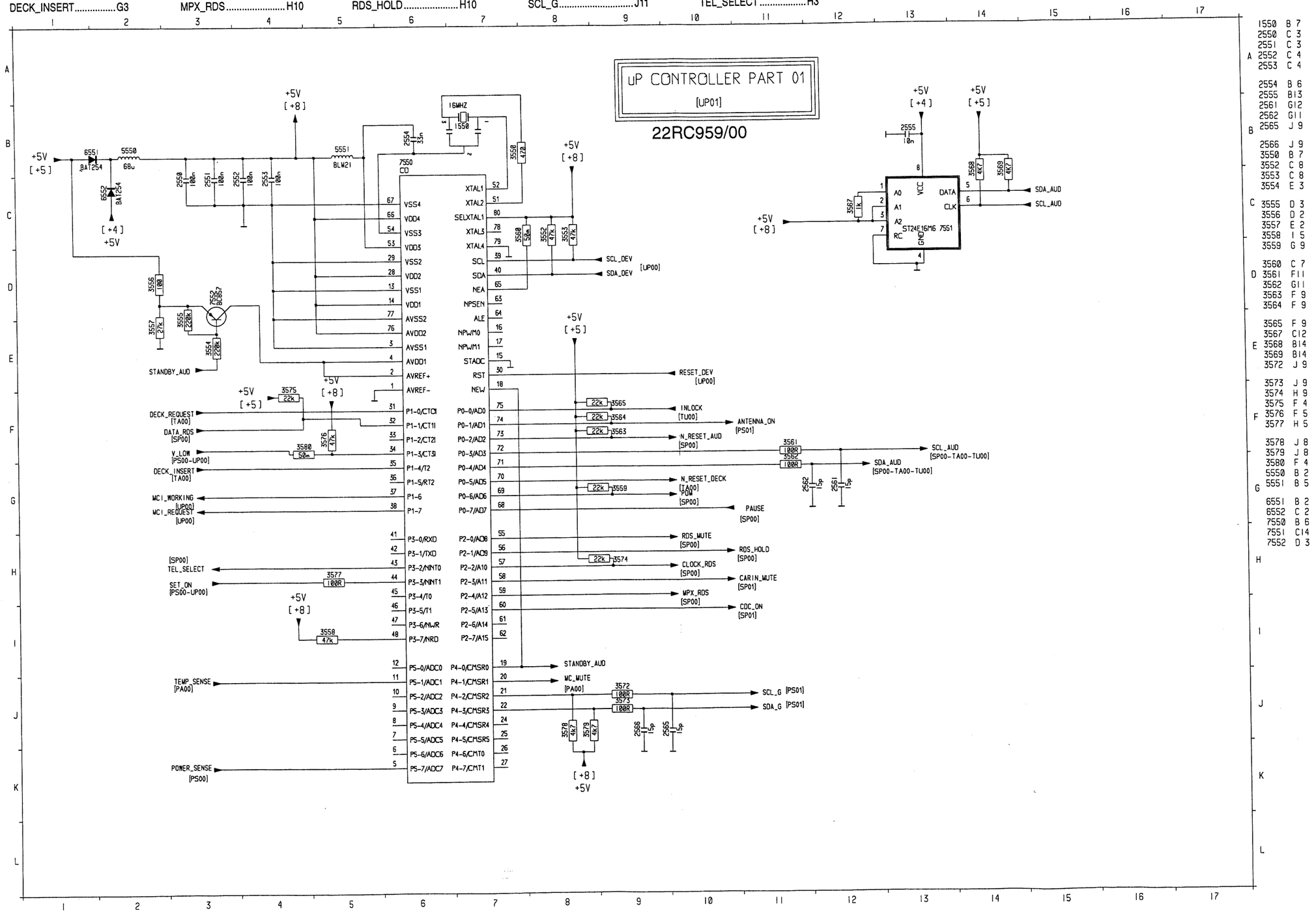

22RC959/00 PWB LAYOUT - TOPSIDE VIEW

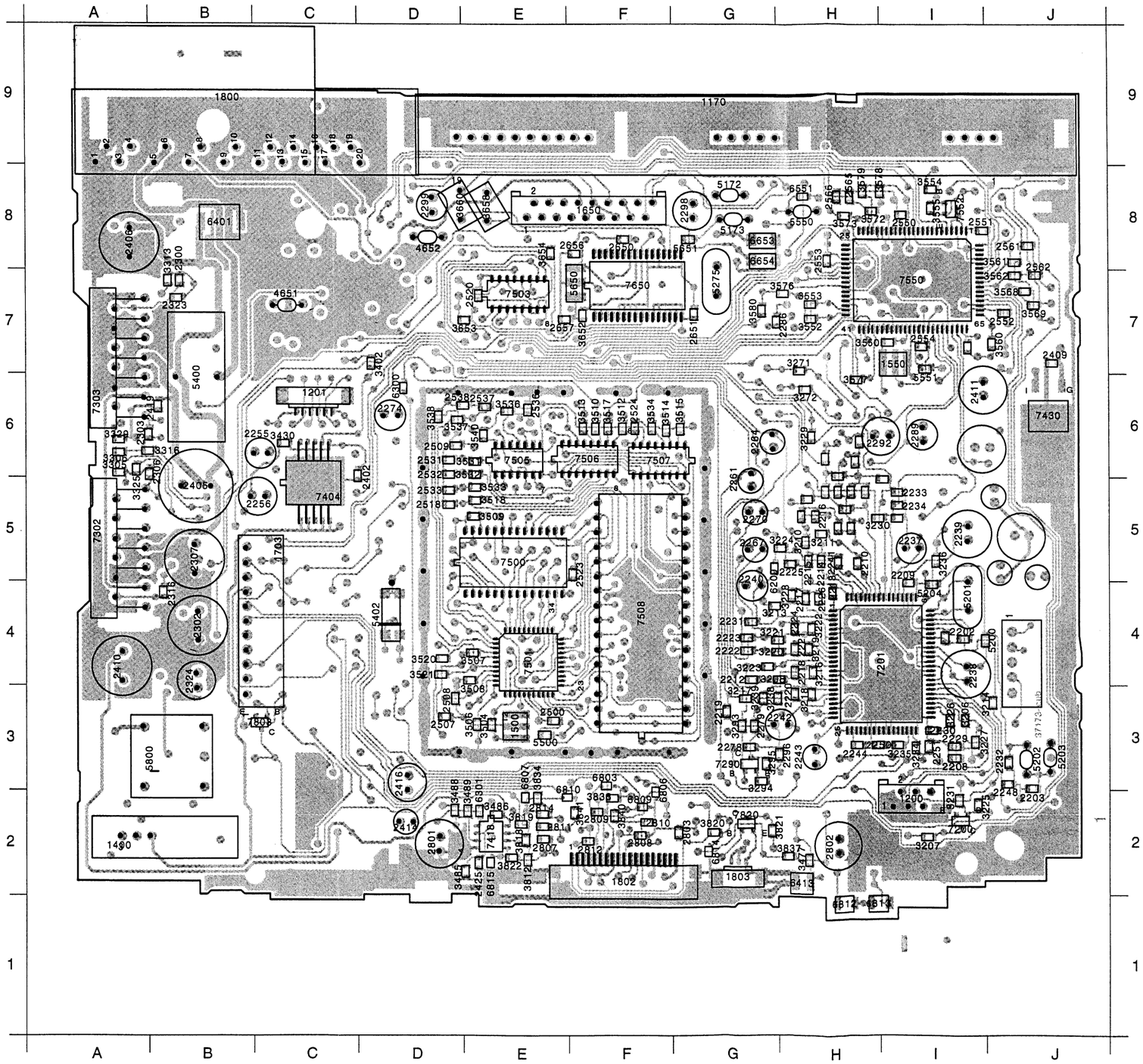

1170 G 8	2414 D 2	3316 A 5	5500 E 2
1200 I 2	2416 D 2	3325 A 5	5550 H 7
1201 C 6	2419 B 6	3329 A 5	5551 I 6
1400 B 1	2425 E 1	3402 D 6	5650 F 7
1500 E 2	2500 E 2	3430 C 5	5651 G 7
1550 I 6	2507 D 3	3477 H 1	5800 B 2
1650 F 7	2508 D 3	3485 E 1	6200 G 4
1703 B 3	2509 D 5	3486 E 2	6300 D 6
1800 B 8	2518 D 5	3488 D 2	6301 E 2
1802 F 1	2520 E 7	3489 E 2	6401 B 7
1803 G 1	2523 F 4	3504 E 2	6413 H 1
2202 I 3	2524 F 5	3506 E 2	6551 H 8
2203 J 2	2531 D 5	3507 E 3	6653 G 7
2208 I 2	2532 D 5	3508 E 3	6654 G 7
2209 I 4	2533 D 5	3509 E 4	6803 F 2
2210 H 4	2536 E 5	3510 F 5	6806 F 2
2212 G 3	2537 E 6	3512 F 5	6807 E 2
2213 H 4	2538 D 6	3513 F 5	6809 F 2
2214 H 4	2550 I 7	3514 F 5	6810 E 2
2215 H 4	2551 I 7	3515 G 5	6812 H 1
2216 H 4	2552 J 6	3517 F 5	6813 H 1
2217 H 4	2553 H 7	3518 E 5	6814 G 1
2218 H 3	2554 I 6	3520 D 3	6815 E 1
2219 G 3	2561 J 7	3521 D 3	7200 I 2
2220 H 3	2562 J 7	3531 E 5	7201 H 3
2221 H 3	2565 H 8	3532 E 5	7290 G 2
2222 G 3	2566 H 8	3533 E 5	7302 A 4
2223 G 3	2650 F 7	3534 F 5	7303 A 6
2224 H 3	2651 G 6	3536 E 5	7404 C 5
2225 H 4	2656 F 7	3537 D 5	7418 E 1
2226 H 4	2657 E 6	3538 D 5	7430 J 5
2229 I 2	2801 D 1	3540 E 5	7500 E 4
2230 I 2	2802 H 1	3550 I 6	7501 E 3
2231 G 3	2803 G 1	3552 H 6	7503 E 7
2232 J 2	2807 E 1	3553 H 6	7505 E 5
2233 I 5	2808 F 1	3554 I 8	7506 F 5
2234 I 5	2809 F 2	3555 I 7	7507 F 5
2237 I 4	2810 F 2	3560 J 6	7508 F 4
2238 I 3	2811 E 1	3561 J 7	7550 I 7
2239 I 4	2812 F 1	3562 J 7	7552 I 7
2240 G 4	2814 E 2	3568 J 7	7650 F 7
2241 H 4	3206 I 2	3569 J 6	7803 C 2
2242 H 2	3207 I 1	3572 H 7	7820 G 2
2243 H 2	3208 G 3	3573 H 7	
2244 H 2	3210 H 4	3576 H 7	
2248 J 2	3211 H 4	3577 H 6	
2250 H 2	3213 G 4	3578 H 8	
2251 I 2	3214 J 3	3579 H 8	
2255 C 5	3216 H 3	3580 G 6	
2256 C 5	3217 G 3	3652 F 6	
2261 G 5	3218 H 3	3653 E 6	
2264 G 5	3219 H 3	3654 E 7	
2267 G 4	3220 G 3	3658 E 7	
2270 G 4	3221 G 3	3660 D 7	
2274 D 5	3222 H 3	3812 E 1	
2278 G 2	3223 G 3	3818 E 1	
2279 G 2	3224 H 4	3819 E 2	
2286 G 6	3225 I 2	3820 G 1	
2289 I 5	3226 I 2	3821 G 1	
2292 H 5	3227 I 2	3822 E 1	
2296 G 2	3228 H 4	3834 E 2	
2298 G 7	3229 H 5	3836 F 2	
2299 D 7	3230 H 4	3837 H 1	
2300 B 7	3231 I 2	3840 F 2	
2302 B 3	3234 I 2	3841 F 2	
2303 A 5	3235 I 2	4651 C 6	
2306 A 5	3236 I 4	4652 D 7	
2307 B 4	3238 G 3	5172 G 8	
2316 B 4	3239 G 3	5173 G 7	
2323 B 7	3271 H 6	5200 I 3	
2324 B 3	3272 H 6	5201 I 4	
2402 C 5	3293 G 2	5202 J 2	
2405 B 5	3294 G 2	5203 J 2	
2406 A 7	3295 G 2	5204 I 4	
2409 J 6	3305 A 5	5275 G 7	
2410 A 3	3306 A 5	5400 B 6	
2411 I 6	3313 B 7	5402 D 4	

22RC959/00 PWB LAYOUT - BOTTOMSIDE VIEW

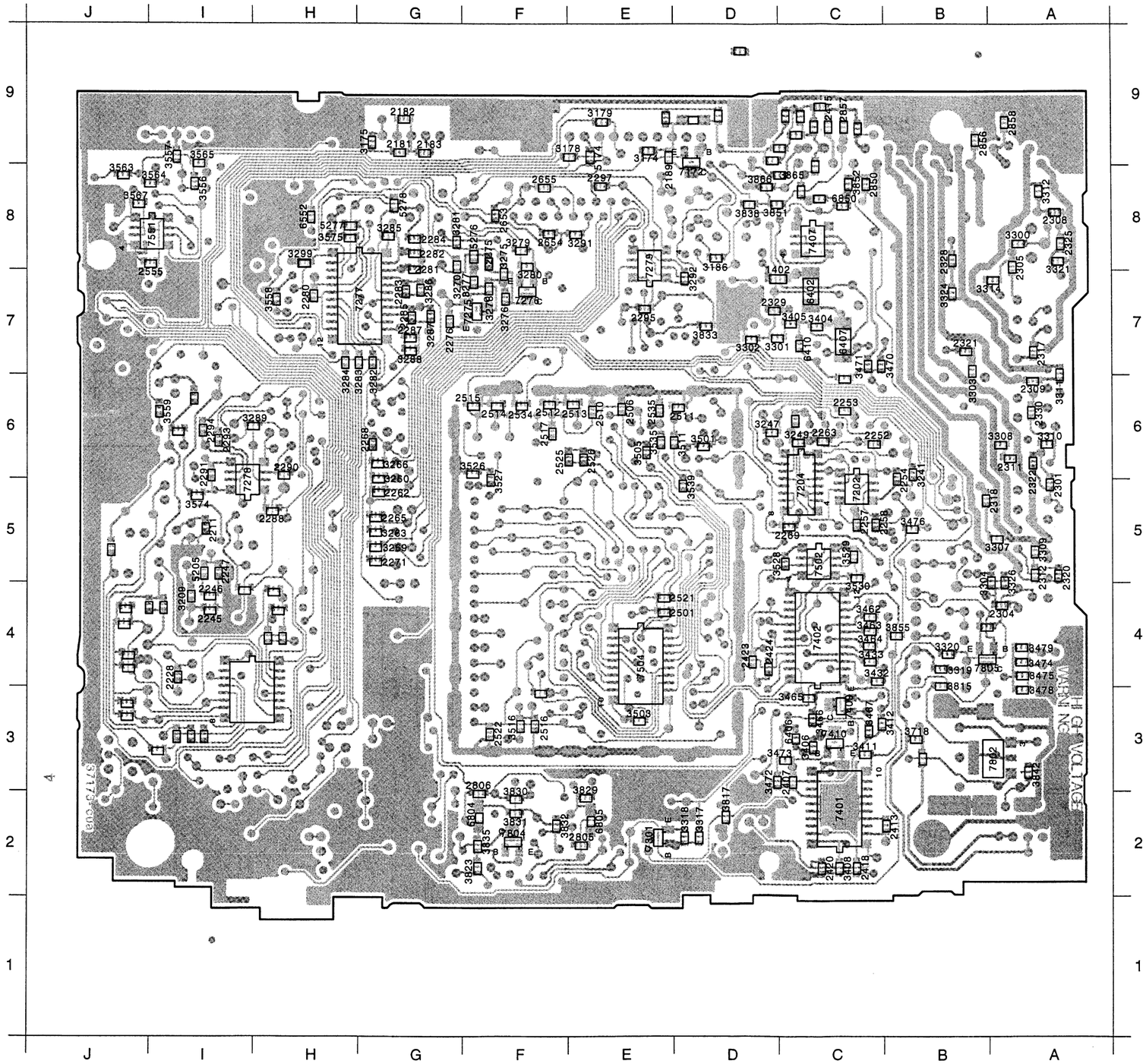

1402 D 7	2653 F 7	3473 D 2	7804 F 1
2181 G 8	2654 F 7	3474 A 3	7805 B 3
2182 G 8	2655 F 8	3475 A 3	
2183 G 8	2805 F 1	3476 B 4	
2189 E 8	2806 G 2	3478 A 3	
2211 I 4	2850 C 8	3479 A 3	
2228 I 3	2856 B 8	3501 D 5	
2245 I 4	2857 C 8	3503 E 2	
2246 I 4	2858 B 8	3505 E 5	
2247 I 4	3174 E 8	3511 E 5	
2252 C 5	3175 H 8	3516 F 2	
2253 C 5	3178 F 8	3526 G 5	
2254 C 5	3179 E 8	3527 F 5	
2257 C 4	3186 D 7	3528 D 4	
2258 C 4	3209 I 4	3529 C 4	
2262 H 5	3241 B 5	3530 C 4	
2263 C 5	3247 D 5	3535 E 5	
2265 H 4	3249 D 5	3539 E 5	
2268 H 5	3260 H 5	3556 I 8	
2269 D 4	3263 H 4	3557 I 8	
2271 H 4	3266 H 5	3558 H 7	
2275 F 7	3269 H 4	3559 J 5	
2276 G 6	3270 G 7	3563 J 8	
2280 H 7	3275 F 7	3564 J 8	
2281 G 7	3276 F 7	3565 I 8	
2282 G 7	3277 G 7	3567 J 7	
2283 G 7	3278 F 7	3574 I 5	
2284 G 7	3279 F 7	3575 H 7	
2285 G 6	3280 F 7	3718 B 2	
2287 G 6	3281 G 7	3815 B 3	
2288 I 5	3282 H 6	3817 D 2	
2290 H 5	3283 H 6	3823 G 1	
2291 I 5	3284 H 6	3829 F 2	
2293 I 5	3285 G 7	3830 F 2	
2294 I 5	3286 G 7	3831 F 2	
2295 E 6	3287 G 6	3832 F 1	
2297 E 8	3288 G 6	3833 D 6	
2301 A 5	3289 I 5	3835 G 1	
2304 B 4	3291 F 7	3838 D 7	
2305 A 7	3292 E 7	3842 A 2	
2308 A 7	3299 H 7	3851 D 7	
2309 A 6	3300 A 7	3852 C 8	
2311 B 5	3301 D 6	3855 C 3	
2312 A 4	3302 D 6	3865 D 8	
2317 A 6	3303 B 6	3866 D 8	
2318 B 5	3304 B 4	4999 D 9	
2320 A 4	3307 B 4	5174 F 8	
2321 B 6	3308 B 5	5205 I 4	
2322 A 5	3309 A 4	5276 G 7	
2325 A 7	3310 A 5	5277 H 7	
2328 B 7	3311 A 6	5278 G 7	
2329 D 6	3312 A 8	6402 C 7	
2330 A 5	3314 B 7	6406 D 2	
2407 D 2	3317 D 1	6407 C 6	
2413 C 1	3318 E 1	6410 D 6	
2415 C 8	3319 B 3	6552 H 7	
2418 C 1	3320 B 3	6804 G 2	
2420 C 1	3321 A 7	6805 F 2	
2423 D 3	3324 B 7	6850 C 7	
2424 D 3	3326 B 4	7172 E 8	
2501 E 4	3404 C 6	7202 C 5	
2506 E 5	3405 D 6	7204 D 5	
2510 E 5	3406 C 2	7275 G 6	
2511 E 6	3408 C 1	7276 F 7	
2512 F 6	3411 C 2	7277 H 7	
2513 F 6	3412 C 2	7278 I 5	
2514 F 6	3432 C 3	7279 E 7	
2515 G 6	3433 C 3	7301 E 1	
2516 F 2	3462 C 3	7401 C 2	
2517 F 5	3463 C 3	7402 C 3	
2521 E 4	3464 C 3	7407 C 7	
2522 F 2	3465 C 3	7409 C 3	
2525 F 5	3466 C 3	7410 C 2	
2526 F 5	3467 C 2	7502 C 4	
2534 F 6	3470 C 6	7504 E 3	
2535 E 5	3471 C 6	7551 J 7	
2555 J 7	3472 D 2	7802 B 2	

CARIN_AUD B9
CARIN_REF B9
CDC_LEFT E9
CDC_REF D9
CDC_RIGHT E9
D2B_REQUEST A2
LO_FL A9
LO_FR A9
LO_RL A9
LO_RR A9
NO_POWER B9
N_RESET_D2B B2
SCL_D2B D1
SDA_D2B D1

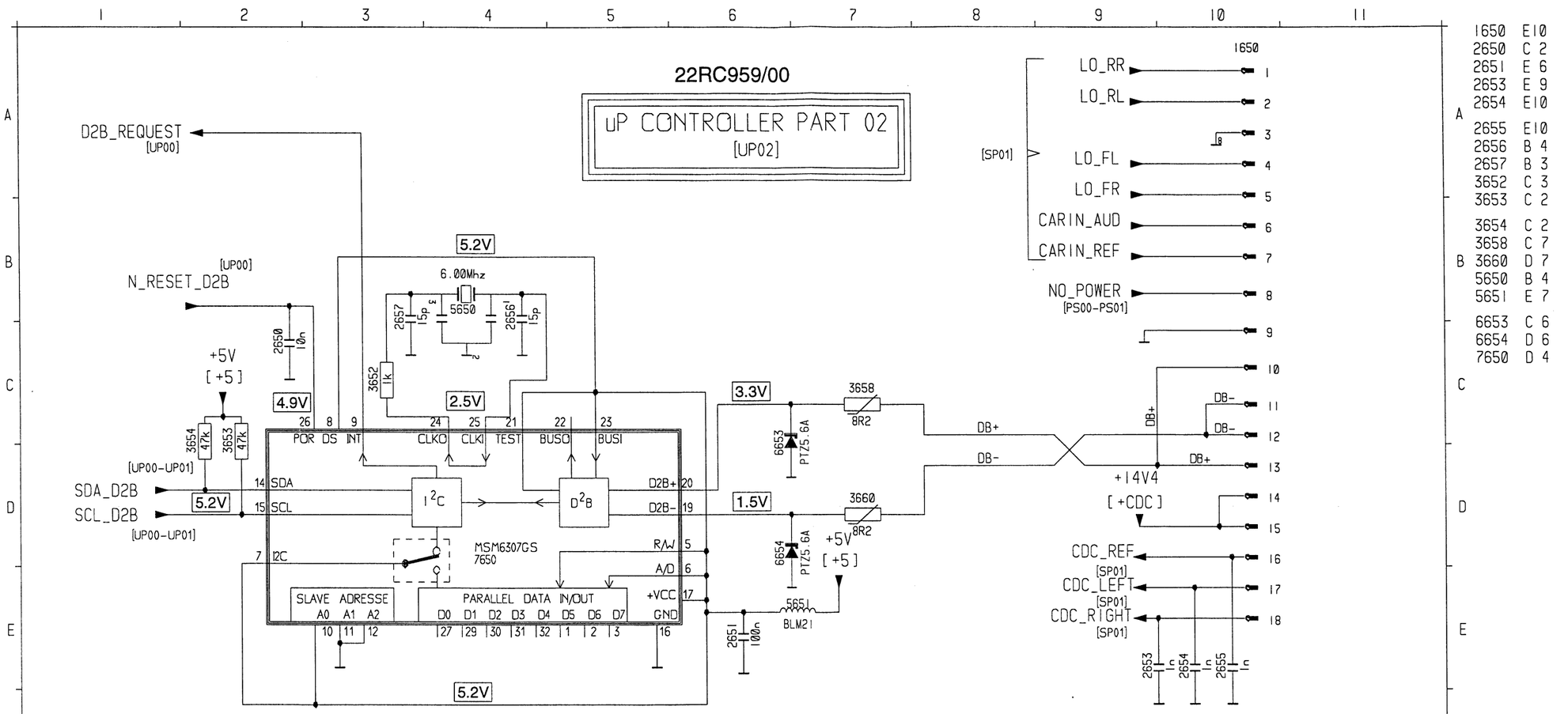

1650 E10
2650 C 2
2651 E 6
2653 E 9
2654 E10
2655 E10
2656 B 4
2657 B 3
3652 C 3
3653 C 2
3654 C 2
3658 C 7
3660 D 7
5650 B 4
5651 E 7
6653 C 6
6654 D 6
7650 D 4

MSM6307GS D²B IC

SYMBOL	I/O	DESCRIPTION
POR	I	Power on - reset
R / W	I	Read / Write selector
DS	I	Data strobe to access data bus
A / D	I	Selects address or data on D0 ~ d7
SDA	I/O	I²C data signal input / output
SCL	I/O	I²C clock signal input / output
I2C	I	Selects I²C or parallel interface
INT	O	Interrupt output
BUSIN	I	D2B input (TTL level)
BUSOUT	O	D2B output (TTL level)
DBN & DBP	I/Os	Differential D2B lines of the internal driver/ receiver, to be terminated with 60Ω
TEST	I	Selects the test mode for factory purposes
6MCI	I	Clock input 6MHz resonator or X-TAL
6MCO	O	Clock output 6MHz resonator or X-TAL
D0 ~ D7	I/Os	8-bit bi-directional address or data bus
A0 ~ A2	I	Programmables I²C slave addresses

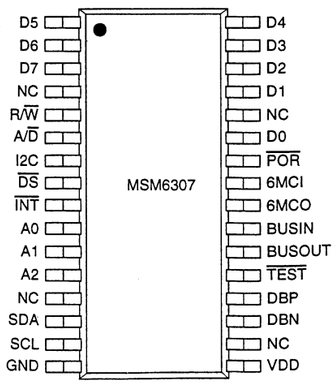

22RC959/00

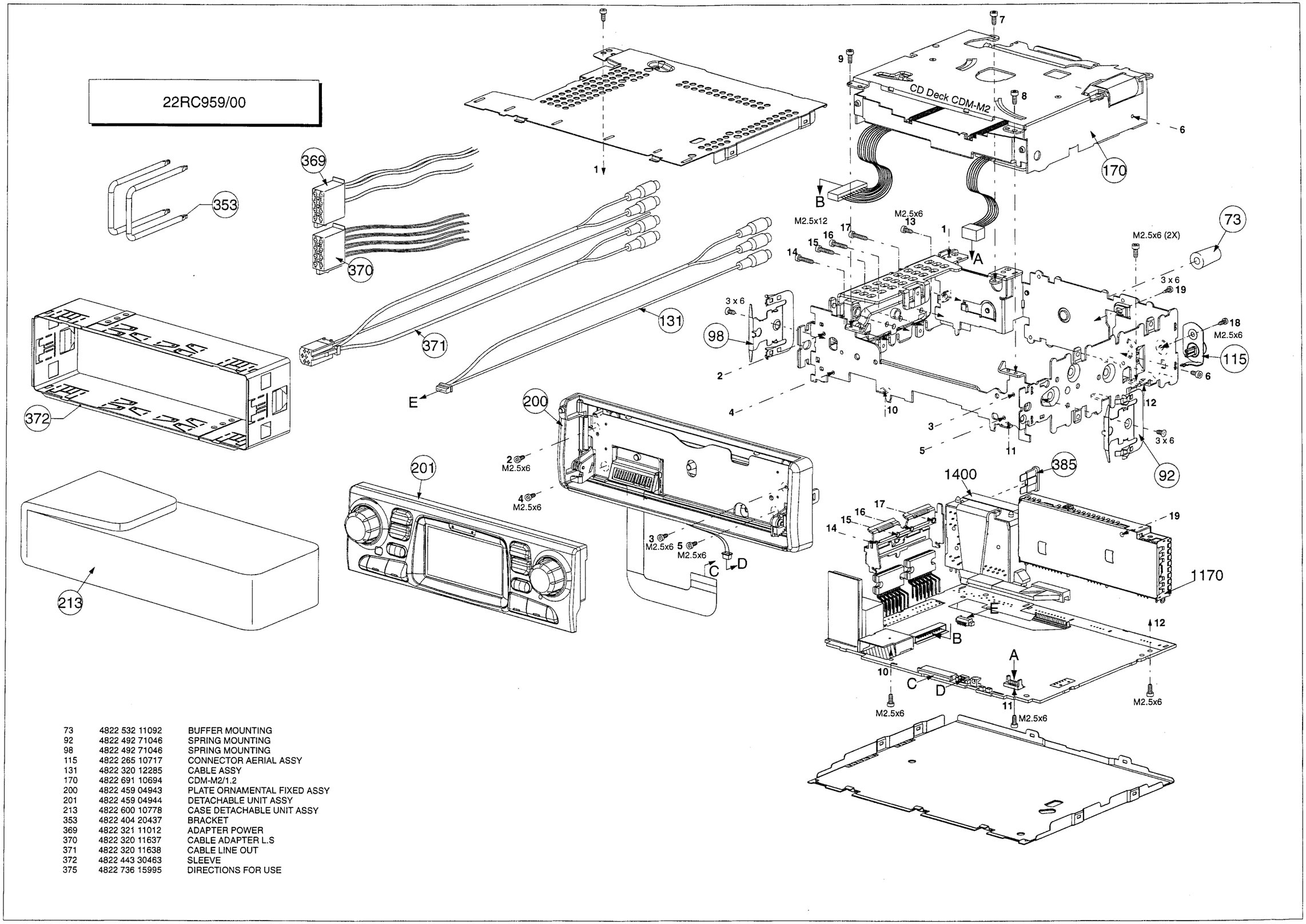

73	4822 532 11092	BUFFER MOUNTING
92	4822 492 71046	SPRING MOUNTING
98	4822 492 71046	SPRING MOUNTING
115	4822 265 10717	CONNECTOR AERIAL ASSY
131	4822 320 12285	CABLE ASSY
170	4822 691 10694	CDM-M2/1.2
200	4822 459 04943	PLATE ORNAMENTAL FIXED ASSY
201	4822 459 04944	DETACHABLE UNIT ASSY
213	4822 600 10778	CASE DETACHABLE UNIT ASSY
353	4822 404 20437	BRACKET
369	4822 321 11012	ADAPTER POWER
370	4822 320 11637	CABLE ADAPTER L.S
371	4822 320 11638	CABLE LINE OUT
372	4822 443 30463	SLEEVE
375	4822 736 15995	DIRECTIONS FOR USE

Miscellaneous		
1170	4822 210 10721	TUNER
1400	4822 218 11862	S.M.P.S. ASSY 5,3V 1,2A
1402	4822 253 30446	2,00A 32V 3,02X1,6X1,2 F
1500	4822 242 10868	CSTCS24.00MX040 R
1550	4822 242 10564	CSTCS16.00MX040-TC
1800	4822 265 10941	CONN. BLOCK A.B.C. V3

⊣⊢		
2181	5322 122 32531	100pF 5% NP0 50V
2182	5322 122 32654	22nF 10% X7R 63V
2183	5322 122 32654	22nF 10% X7R 63V
2189	4822 126 13196	100nF 10% 0805 X7R 25V
2202	5322 122 34123	1nF 10% X7R 50V
2203	4822 126 13196	100nF 10% 0805 X7R 25V
2208	5322 122 32531	100pF 5% NP0 50V
2209	4822 126 12105	33nF 5% X7R 63V
2210	5322 122 32654	22nF 10% X7R 63V
2211	4822 126 13196	100nF 10% 0805 X7R 25V
2212	5322 122 34098	10nF 10% X7R 63V
2213	5322 122 34098	10nF 10% X7R 63V
2214	5322 122 31863	330pF 5% NP0 50V
2215	5322 122 33538	150pF 2% NP0 63V
2216	5322 122 31863	330pF 5% NP0 50V
2217	5322 122 34123	1nF 10% X7R 50V
2218	5322 122 34123	1nF 10% X7R 50V
2219	5322 122 34098	10nF 10% X7R 63V
2220	5322 122 34123	1nF 10% X7R
2221	5322 122 34123	1nF 10% X7R 50V
2222	5322 122 34098	10nF 10% X7R 63V
2223	5322 122 34098	10nF 10% X7R 63V
2224	5322 122 34123	1nF 10% X7R 50V
2225	4822 126 13196	100nF 10% 0805 X7R 25V
2226	5322 122 34123	1nF 10% X7R 50V
2228	4822 126 13196	100nF 10% 0805 X7R 25V
2229	5322 122 32531	100pF 5% NP0 50V
2230	5322 122 32531	100pF 5% NP0 50V
2231	4822 126 13196	100nF 10% 0805 X7R 25V
2232	4822 126 13196	100nF 10% 0805 X7R 25V
2233	5322 122 31863	330pF 5% NP0 50V
2234	5322 122 31863	330pF 5% NP0 50V
2237	4822 124 23279	22µF 20% 16V
2238	4822 124 23582	220µF 10V
2239	4822 124 11952	100µF 20% 16V
2240	4822 124 23279	22µF 20% 16V
2241	4822 126 14043	1µF +80-20% 16V
2242	4822 124 23279	22µF 20% 16V
2243	4822 124 23282	1µF 20% 50V
2244	5322 122 34123	1nF 10% X7R 50V
2245	5322 122 32269	6,8pF 5% 50V
2246	5322 122 32269	6,8pF 5% 50V
2247	5322 122 34123	1nF 10% X7R 50V
2248	4822 122 33575	220pF 5%NPO 50V
2250	5322 122 32531	100pF 5% NP0 50V
2251	5322 122 32531	100pF 5% NP0 50V
2252	4822 126 13849	220nF 10% 16V
2253	4822 126 13849	220nF 10% 16V
2254	4822 126 13196	100nF 10% 0805 X7R 25V
2255	4822 124 23279	22µF 20% 16V
2256	4822 124 22646	47µF 20% 16V

⊣⊢		
2257	4822 126 14043	1µF +80-20% 16V
2258	4822 126 14043	1µF +80-20% 16V
2261	4822 124 41017	10µF 16V
2262	5322 122 34123	1nF 10% X7R 50V
2263	4822 126 13849	220nF 10% 16V
2264	4822 124 41017	10µF 16V
2265	5322 122 34123	1nF 10% X7R 50V
2267	4822 124 41017	10µF 16V
2268	5322 122 34123	1nF 10% X7R 50V
2269	5322 122 34123	1nF 10% X7R 50V
2270	4822 124 41017	10µF 16V
2271	5322 122 34123	1nF 10% X7R 50V
2274	4822 124 23279	22µF 20% 16V
2275	5322 122 32448	10pF 5% 50V
2276	5322 122 32659	33pF 5% 50V
2278	5322 122 34123	1nF 10% X7R 50V
2279	4822 126 14043	1µF +80-20% 16V
2280	4822 126 13849	220nF 10% 16V
2281	4822 126 13196	100nF 10% 0805 X7R 25V
2282	4822 126 13849	220nF 10% 16V
2283	4822 126 13694	68pF 1% NP0 63V
2284	4822 126 13196	100nF 10% 0805 X7R 25V
2285	4822 126 13694	68pF 1% NP0 63V
2286	4822 126 13196	100nF 10% 0805 X7R 25V
2287	5322 122 32654	22nF 10% X7R 63V
2288	4822 126 13849	220nF 10% 16V
2289	4822 124 23279	22µF 20% 16V
2290	4822 126 13849	220nF 10% 16V
2291	4822 126 13196	100nF 10% 0805 X7R 25V
2292	4822 124 22646	47µF 20% 16V
2293	4822 126 14043	1µF +80-20% 16V
2294	4822 126 14043	1µF +80-20% 16V
2295	4822 126 13196	100nF 10% 0805 X7R 25V
2296	4822 126 13849	220nF 10% 16V
2297	4822 126 13849	220nF 10% 16V
2298	4822 124 22646	47µF 20% 16V
2299	4822 124 23279	22µF 20% 16V
2300	4822 126 14043	1µF +80-20% 16V
2301	4822 126 14043	1µF +80-20% 16V
2302	4822 124 80061	1000µF 20% 25V
2303	4822 126 14043	1µF +80-20% 16V
2304	4822 126 14043	1µF +80-20% 16V
2305	4822 126 14043	1µF +80-20% 16V
2306	4822 126 14043	1µF +80-20% 16V
2307	4822 124 80061	1000µF 20% 25V
2308	5322 122 34098	10nF 10% X7R 63V
2309	5322 122 34098	10nF 10% X7R 63V
2311	5322 122 34098	10nF 10% X7R 63V
2312	5322 122 34098	10nF 10% X7R 63V
2316	4822 126 13196	100nF 10% 0805 X7R 25V
2317	4822 126 13196	100nF 10% 0805 X7R 25V
2318	4822 126 13196	100nF 10% 0805 X7R 25V
2320	4822 126 13196	100nF 10% 0805 X7R 25V
2321	4822 126 13196	100nF 10% 0805 X7R 25V
2322	4822 126 14043	1µF +80-20% 16V
2323	4822 126 14043	1µF +80-20% 16V
2324	4822 124 80453	100µF 20% 10V
2325	4822 126 13196	100nF 10% 0805 X7R 25V
2328	4822 126 13196	100nF 10% 0805 X7R 25V
2329	5322 122 34098	10nF 10% X7R 63V

2330	4822 126 13196	100nF 10% 0805 X7R 25V
2402	4822 126 12105	33nF 5%X7R 63V
2405	4822 124 80769	2200µF 20% 16V
2406	4822 124 23308	2200µF 20% 16V
2407	5322 122 32268	470pF 10% 50V
2409	4822 126 13849	220nF 10% 16V
2410	4822 124 80061	1000µF 20% 25V
2411	4822 124 11952	100µF 20% 16V
2413	4822 126 14043	1µF +80-20% 16V
2414	4822 124 23282	1µF 20% 50V
2415	4822 122 33575	220pF 5%NPO 50V
2416	4822 124 22646	47µF 20% 16V
2418	4822 126 13849	220nF 10% 16V
2419	5322 126 10223	4,7nF 10% X7R 63V
2420	4822 126 13196	100nF 10% 0805 X7R 25V
2423	5322 122 33244	8,2pF 5%NPO 50V
2424	5322 122 33244	8,2pF 5%NPO 50V
2425	5322 122 32654	22nF 10% X7R 63V
2500	5322 122 34098	10nF 10% X7R 63V
2501	5322 122 34098	10nF 10% X7R 63V
2506	5322 122 34123	1nF 10% X7R 50V
2507	5322 122 34123	1nF 10% X7R 50V
2508	5322 122 34123	1nF 10% X7R 50V
2509	5322 122 34123	1nF 10% X7R 50V
2510	5322 122 34123	1nF 10% X7R 50V
2511	5322 122 34123	1nF 10% X7R 50V
2512	5322 122 34123	1nF 10% X7R 50V
2513	5322 122 34123	1nF 10% X7R 50V
2514	5322 122 34123	1nF 10% X7R 50V
2515	5322 122 34123	1nF 10% X7R 50V
2516	5322 122 34123	1nF 10% X7R 50V
2517	5322 122 34123	1nF 10% X7R 50V
2518	5322 122 34098	10nF 10% X7R 63V
2520	5322 122 34098	10nF 10% X7R 63V
2521	5322 122 34098	10nF 10% X7R 63V
2522	5322 122 34098	10nF 10% X7R 63V
2523	5322 122 34098	10nF 10% X7R 63V
2524	5322 122 34098	10nF 10% X7R 63V
2525	5322 122 34098	10nF 10% X7R 63V
2526	5322 122 34098	10nF 10% X7R 63V
2531	5322 122 34123	1nF 10% X7R 50V
2532	5322 122 34123	1nF 10% X7R 50V
2533	5322 122 34123	1nF 10% X7R 50V
2534	5322 122 34123	1nF 10% X7R 50V
2535	4822 126 13486	15pF 2% NP0 63V
2536	4822 126 13486	15pF 2% NP0 63V
2537	4822 126 13486	15pF 2% NP0 63V
2538	4822 126 13486	15pF 2% NP0 63V
2550	4822 126 13196	100nF 10% 0805 X7R 25V
2551	4822 126 13196	100nF 10% 0805 X7R 25V
2552	4822 126 13196	100nF 10% 0805 X7R 25V
2553	4822 126 13196	100nF 10% 0805 X7R 25V
2554	4822 126 12105	33nF 5%X7R 63V
2555	5322 122 34098	10nF 10% X7R 63V
2561	4822 126 13486	15pF 2% NP0 63V
2562	4822 126 13486	15pF 2% NP0 63V
2565	4822 126 13486	15pF 2% NP0 63V
2566	4822 126 13486	15pF 2% NP0 63V
2650	5322 122 34098	10nF 10% X7R 63V
2651	4822 126 13196	100nF 10% 0805 X7R 25V
2653	5322 122 34123	1nF 10% X7R 50V
2654	5322 122 34123	1nF 10% X7R 50V
2655	5322 122 34123	1nF 10% X7R 50V
2656	4822 126 13486	15pF 2% NP0 63V
2657	4822 126 13486	15pF 2% NP0 63V
2801	4822 124 23582	220µF 10V
2802	4822 124 23582	220µF 10V
2803	5322 122 32268	470pF 10% 50V
2805	5322 122 32531	100pF 5% NP0 50V
2806	5322 122 32531	100pF 5% NP0 50V
2807	5322 122 32268	470pF 10% 50V
2808	5322 122 32268	470pF 10% 50V
2809	5322 122 32268	470pF 10% 50V
2810	5322 122 32268	470pF 10% 50V
2811	5322 122 32268	470pF 10% 50V
2812	5322 122 32268	470pF 10% 50V
2814	5322 122 32268	470pF 10% 50V
2850	5322 122 34123	1nF 10% X7R 50V
2856	4822 122 33575	220pF 5%NPO 50V
2857	4822 122 33575	220pF 5%NPO 50V
2858	4822 122 33575	220pF 5%NPO 50V

3174	4822 051 20332	3K3 5% 0,1W
3175	4822 051 20102	1KΩ 5% 0,1W
3178	4822 051 20008	0Ω JUMP. (0805)
3179	4822 051 20008	0Ω JUMP. (0805)
3186	4822 117 11449	2K2 1% 0,1W
3206	4822 117 11503	220Ω 1% 0.1W
3207	4822 051 20101	100Ω 5% 0,1W
3208	4822 051 20101	100Ω 5% 0,1W
3209	4822 051 20104	100KΩ 5% 0,1W
3210	4822 051 20332	3K3 5% 0,1W
3211	4822 051 20332	3K3 5% 0,1W
3213	4822 051 20562	5K6 5% 0,1W
3214	4822 051 20101	100Ω 5% 0,1W
3216	4822 117 12955	2K7 1% 0,1W 0805
3217	4822 051 20101	100Ω 5% 0,1W
3218	4822 117 12955	2K7 1% 0,1W 0805
3219	4822 117 12955	2K7 1% 0,1W 0805
3220	4822 051 20101	100Ω 5% 0,1W
3221	4822 051 20101	100Ω 5% 0,1W
3222	4822 117 12955	2K7 1% 0,1W 0805
3223	4822 117 10965	18KΩ 1% 0,1W
3224	4822 051 20102	1KΩ 5% 0,1W
3225	4822 117 10834	47KΩ 1% 0,1W
3226	4822 117 11503	220Ω 1% 0.1W
3227	4822 117 11503	220Ω 1% 0.1W
3228	4822 051 20273	27KΩ 5% 0,1W
3229	4822 051 20472	4K7 5% 0,1W
3230	4822 051 20472	4K7 5% 0,1W
3231	4822 051 20472	4K7 5% 0,1W
3234	4822 117 11503	220Ω 1% 0.1W
3235	4822 117 11503	220Ω 1% 0.1W
3236	4822 051 20101	100Ω 5% 0,1W
3238	4822 117 12955	2K7 1% 0,1W 0805
3239	4822 117 12955	2K7 1% 0,1W 0805
3241	4822 051 20105	1MΩ 5% 0,1W
3247	4822 051 20105	1MΩ 5% 0,1W

22RC959/00

3249	4822 051 20008	0Ω JUMP. (0805)
3260	4822 051 20223	22KΩ 5% 0,1W
3263	4822 051 20223	22KΩ 5% 0,1W
3266	4822 051 20223	22KΩ 5% 0,1W
3269	4822 051 20223	22KΩ 5% 0,1W
3270	4822 051 20122	1K2 5% 0,1W
3271	4822 117 11383	12KΩ 1% 0,1W
3272	4822 117 11383	12KΩ 1% 0,1W
3275	4822 051 20472	4K7 5% 0,1W
3276	4822 117 11139	1K5 1% 0,1W
3277	4822 051 20122	1K2 5% 0,1W
3278	4822 117 11149	82KΩ 1% 0,1W
3279	4822 117 10833	10KΩ 1% 0,1W
3280	4822 117 10834	47KΩ 1% 0,1W
3281	4822 051 20472	4K7 5% 0,1W
3282	4822 051 20331	330Ω 5% 0,1W
3283	4822 051 20331	330Ω 5% 0,1W
3284	4822 051 20331	330Ω 5% 0,1W
3285	4822 051 20478	4Ω7 5% 0,1W
3286	4822 117 10833	10KΩ 1% 0,1W
3287	4822 117 10833	10KΩ 1% 0,1W
3288	4822 051 20333	33KΩ 5% 0,1W
3289	4822 051 20105	1MΩ 5% 0,1W
3291	4822 051 20105	1MΩ 5% 0,1W
3292	4822 051 20008	0Ω JUMP. (0805)
3293	4822 117 11139	1K5 1% 0,1W
3294	4822 051 20224	220KΩ 5% 0,1W
3295	4822 051 20104	100KΩ 5% 0,1W
3299	4822 051 20109	10Ω 5% 0,1W
3300	4822 117 10833	10KΩ 1% 0,1W
3301	4822 051 20223	22KΩ 5% 0,1W
3302	4822 051 20332	3K3 5% 0,1W
3303	4822 051 20478	4Ω7 5% 0,1W
3304	4822 117 10833	10KΩ 1% 0,1W
3305	4822 117 10833	10KΩ 1% 0,1W
3306	4822 117 10833	10KΩ 1% 0,1W
3307	4822 051 20478	4Ω7 5% 0,1W
3308	4822 051 20478	4Ω7 5% 0,1W
3309	4822 051 20478	4Ω7 5% 0,1W
3310	4822 117 12955	2K7 1% 0,1W 0805
3311	4822 051 20478	4Ω7 5% 0,1W
3312	4822 051 20478	4Ω7 5% 0,1W
3313	4822 117 12955	2K7 1% 0,1W 0805
3314	4822 117 10833	10KΩ 1% 0,1W
3316	4822 117 10833	10KΩ 1% 0,1W
3317	4822 117 10834	47KΩ 1% 0,1W
3318	4822 117 10834	47KΩ 1% 0,1W
3319	4822 117 10833	10KΩ 1% 0,1W
3320	4822 051 20101	100Ω 5% 0,1W
3321	4822 051 20478	4Ω7 5% 0,1W
3324	4822 051 20478	4Ω7 5% 0,1W
3325	4822 117 10833	10KΩ 1% 0,1W
3326	4822 117 10833	10KΩ 1% 0,1W
3329	4822 116 10062	470Ω 50% 16V PTC 0805
3402	4822 117 10834	47KΩ 1% 0,1W
3404	4822 051 20224	220KΩ 5% 0,1W
3405	4822 051 20104	100KΩ 5% 0,1W
3406	4822 051 20154	150KΩ 5% 0,1W
3408	4822 051 20273	27KΩ 5% 0,1W
3411	4822 117 10834	47KΩ 1% 0,1W

3412	4822 117 10834	47KΩ 1% 0,1W
3430	4822 051 20109	10Ω 5% 0,1W
3432	4822 117 10834	47KΩ 1% 0,1W
3433	4822 117 10834	47KΩ 1% 0,1W
3462	4822 051 20104	100KΩ 5% 0,1W
3463	4822 051 20104	100KΩ 5% 0,1W
3464	4822 051 20104	100KΩ 5% 0,1W
3465	4822 117 10834	47KΩ 1% 0,1W
3466	4822 117 10834	47KΩ 1% 0,1W
3467	4822 051 20472	4K7 5% 0,1W
3470	4822 051 20104	100KΩ 5% 0,1W
3471	4822 117 10833	10KΩ 1% 0,1W
3472	4822 051 20102	1KΩ 5% 0,1W
3473	4822 117 10834	47KΩ 1% 0,1W
3474	4822 051 20109	10Ω 5% 0,1W
3475	4822 051 20109	10Ω 5% 0,1W
3476	4822 051 20008	0Ω JUMP. (0805)
3477	4822 051 20331	330Ω 5% 0,1W
3478	4822 051 20109	10Ω 5% 0,1W
3479	4822 051 20109	10Ω 5% 0,1W
3485	4822 051 20224	220KΩ 5% 0,1W
3486	4822 051 20273	27KΩ 5% 0,1W
3488	4822 117 10833	10KΩ 1% 0,1W
3489	4822 051 20334	330KΩ 5% 0,1W
3501	4822 051 20101	100Ω 5% 0,1W
3503	4822 051 20102	1KΩ 5% 0,1W
3504	4822 051 20471	470Ω 5% 0,1W
3505	4822 051 20101	100Ω 5% 0,1W
3506	4822 051 20102	1KΩ 5% 0,1W
3507	4822 051 20102	1KΩ 5% 0,1W
3508	4822 051 20101	100Ω 5% 0,1W
3509	4822 051 20008	0Ω JUMP. (0805)
3510	4822 117 11449	2K2 1% 0,1W
3511	4822 051 20101	100Ω 5% 0,1W
3512	4822 051 20101	100Ω 5% 0,1W
3513	4822 051 20472	4K7 5% 0,1W
3514	4822 051 20101	100Ω 5% 0,1W
3515	4822 051 20101	100Ω 5% 0,1W
3516	4822 051 20101	100Ω 5% 0,1W
3517	4822 051 20101	100Ω 5% 0,1W
3518	4822 117 10834	47KΩ 1% 0,1W
3520	4822 117 10834	47KΩ 1% 0,1W
3521	4822 117 10834	47KΩ 1% 0,1W
3526	4822 051 20008	0Ω JUMP. (0805)
3527	4822 051 20008	0Ω JUMP. (0805)
3528	4822 051 20102	1KΩ 5% 0,1W
3529	4822 117 10834	47KΩ 1% 0,1W
3530	4822 117 10834	47KΩ 1% 0,1W
3531	4822 051 20472	4K70 5% 0,1W
3532	4822 051 20101	100Ω 5% 0,1W
3533	4822 051 20101	100Ω 5% 0,1W
3534	4822 051 20101	100Ω 5% 0,1W
3535	4822 051 20101	100Ω 5% 0,1W
3536	4822 051 20101	100Ω 5% 0,1W
3537	4822 051 20101	100Ω 5% 0,1W
3538	4822 051 20101	100Ω 5% 0,1W
3539	4822 051 20472	4K7 5% 0,1W
3540	4822 051 20472	4K7 5% 0,1W
3550	4822 051 20471	470Ω 5% 0,1W
3552	4822 117 10834	47KΩ 1% 0,1W

3553	4822 117 10834	47KΩ 1% 0,1W
3554	4822 051 20224	220KΩ 5% 0,1W
3555	4822 051 20224	220KΩ 5% 0,1W
3556	4822 051 20101	100Ω 5% 0,1W
3557	4822 051 20273	27KΩ 5% 0,1W
3558	4822 117 10834	47KΩ 1% 0,1W
3559	4822 051 20223	22KΩ 5% 0,1W
3560	4822 051 20008	0Ω JUMP. (0805)
3561	4822 051 20101	100Ω 5% 0,1W
3562	4822 051 20101	100Ω 5% 0,1W
3563	4822 051 20223	22KΩ 5% 0,1W
3564	4822 051 20223	22KΩ 5% 0,1W
3565	4822 051 20223	22KΩ 5% 0,1W
3567	4822 051 20102	1KΩ 5% 0,1W
3568	4822 051 20472	4K7 5% 0,1W
3569	4822 051 20472	4K7 5% 0,1W
3572	4822 051 20101	100Ω 5% 0,1W
3573	4822 051 20101	100Ω 5% 0,1W
3574	4822 051 20223	22KΩ 5% 0,1W
3575	4822 051 20223	22KΩ 5% 0,1W
3576	4822 117 10834	47KΩ 1% 0,1W
3577	4822 051 20101	100Ω 5% 0,1W
3578	4822 051 20472	4K7 5% 0,1W
3579	4822 051 20472	4K7 5% 0,1W
3580	4822 051 20008	0Ω JUMP. (0805)
3652	4822 051 20102	1KΩ 5% 0,1W
3653	4822 117 10834	47KΩ 1% 0,1W
3654	4822 117 10834	47KΩ 1% 0,1W
3658	4822 116 10063	8,2Ω 25% 30V PTC
3660	4822 116 10063	8,2Ω 25% 30V PTC
3718	4822 051 20008	0Ω JUMP. (0805)
3812	4822 051 20104	100KΩ 5% 0,1W
3815	4822 117 10834	47KΩ 1% 0,1W
3817	4822 051 20228	2Ω2 5% 0,1W
3818	4822 117 10834	47KΩ 1% 0,1W
3819	4822 051 20472	4K7 5% 0,1W
3820	4822 051 20331	330Ω 5% 0,1W
3821	4822 051 20101	100Ω 5% 0,1W
3822	4822 051 20331	330Ω 5% 0,1W
3823	4822 051 20331	330Ω 5% 0,1W
3829	4822 051 20472	4K7 5% 0,1W
3830	4822 117 11503	220Ω 1% 0.1W
3831	4822 117 11503	220Ω 1% 0.1W
3832	4822 051 20331	330Ω 5% 0,1W
3833	4822 117 10834	47KΩ 1% 0,1W
3834	4822 051 20102	1KΩ 5% 0,1W
3835	4822 117 10833	10KΩ 1% 0,1W
3836	4822 117 10834	47KΩ 1% 0,1W
3837	4822 051 20101	100Ω 5% 0,1W
3838	4822 051 20102	1KΩ 5% 0,1W
3840	4822 051 20102	1KΩ 5% 0,1W
3841	4822 051 20102	1KΩ 5% 0,1W
3842	4822 051 20105	1MΩ 5% 0,1W
3851	4822 051 20008	0Ω JUMP. (0805)
3852	4822 117 10833	10KΩ 1% 0,1W
3855	4822 117 10833	10KΩ 1% 0,1W
3865	4822 051 20101	100Ω 5% 0,1W
3866	4822 051 20101	100Ω 5% 0,1W

5172	4822 157 10975	120UH 10%
5173	4822 157 71184	10UH 10%
5174	4822 157 71206	BLM21A601SPT
5200	4822 157 71206	BLM21A601SPT
5201	4822 242 10565	K1101-95880-2(36.860MHZ)
5202	4822 157 71184	10UH 10%
5203	4822 157 10976	68UH 10%
5204	4822 157 71206	BLM21A601SPT
5205	4822 157 10977	4,7UH 10%
5275	4822 242 81164	AT-51(11.2896MHZ)
5276	4822 157 71206	BLM21A601SPT
5277	4822 157 71206	BLM21A601SPT
5278	4822 157 71206	BLM21A601SPT
5400	4822 157 70935	COIL ASSY 97UH 10A
5402	4822 242 10398	TJ125DHB2 (32,768KHZ)
5500	4822 157 71206	BLM21A601SPT
5550	4822 157 10976	68UH 10%
5551	4822 157 71206	BLM21A601SPT
5650	4822 242 10709	CSTCS6.00MG-TC
5651	4822 157 71206	BLM21A601SPT
5800	4822 209 16297	LSYAA50

6200	4822 130 10654	BAT254
6300	4822 130 83757	BAS216
6301	4822 130 83757	BAS216
6401	4822 130 10488	S3G
6402	4822 130 10655	1SR154-400
6406	4822 130 10656	UDZ20B
6407	4822 130 10655	1SR154-400
6410	4822 130 83757	BAS216
6413	4822 130 11174	LSA670-JM
6551	4822 130 10654	BAT254
6552	4822 130 10654	BAT254
6653	4822 130 10657	PTZ5.6A
6654	4822 130 10657	PTZ5.6A
6803	4822 130 10185	UDZ5.6B
6804	4822 130 10185	UDZ5.6B
6805	4822 130 10185	UDZ5.6B
6806	4822 130 10185	UDZ5.6B
6807	4822 130 10185	UDZ5.6B
6809	4822 130 10185	UDZ5.6B
6810	4822 130 10185	UDZ5.6B
6812	4822 130 11175	LST670-JK
6813	4822 130 11175	LST670-JK
6814	4822 130 10185	UDZ5.6B
6815	4822 130 10185	UDZ5.6B
6850	4822 130 83757	BAS216

7172	4822 130 60511	BC847B
7200	4822 130 60511	BC847B
7201	4822 209 15479	SAA7701H/N212
7202	4822 209 33985	TDA8579T/N1
7204	5322 209 14481	HEF4053BT
7275	4822 130 60511	BC847B
7276	4822 130 60511	BC847B
7277	4822 209 16148	SAA7367T
7278	4822 209 33985	TDA8579T/N1
7279	4822 209 33985	TDA8579T/N1

22RC959/00

7290	5322 130 60508	BC857B
7301	4822 130 60511	BC847B
7302	4822 209 16278	TDA1561Q/N2
7303	4822 209 16278	TDA1561Q/N2
7401	4822 209 14814	L4949NP
7402	4822 209 16279	SAA1305T
7404	4822 209 14815	VN06SP
7407	4822 209 15826	L9820D
7409	4822 130 60511	BC847B
7410	4822 130 60511	BC847B
7418	4822 209 33162	MC4558IDT
7430	4822 209 16281	LF85CDT
7500	4822 209 31553	FCB61C65LL
7501	4822 209 16282	P51XAG30KFBD
7503	5322 209 11102	HEF4052BT
7504	5322 209 60424	74HC573D
7505	4822 209 30426	74HC00D
7506	4822 209 91136	PC74HC259T
7507	4822 209 14819	74HC251D
7550	4822 209 16283	P83CE569EFB/021
7552	5322 130 60508	BC857B
7650	4822 209 32743	MSM6307GS
7802	5322 130 63033	BCP56
7803	4822 130 60511	BC847B
7804	4822 130 60511	BC847B
7805	4822 130 60511	BC847B
7820	4822 130 60511	BC847B

CD Car Radio 22RC959/00

Service
Service
Service

Option

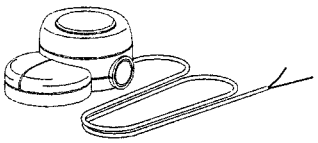

Supplement

For repair information of the CD deck, see service manual 4822 725 25483 of CD deck CDMM2.

Service Manual

This supplement must be used together with Service Manual 4822 725 25864.
It concerns the sets produced from FD01.
The main changes are: Added possibility for a 2 wired remote control in option,added TMC (Traffic Message Channel) features.
This supplement contains updated schematic diagrams (changed parts in blue), the new PWB layout and the updated electrical partslist.

12 V

Contents **page**

CLASS 1
LASER PRODUCT

Published by Philips Car Systems Printed in the Netherlands

Subject to modification 4822 725 25868

PHILIPS

Zoom on C chamber

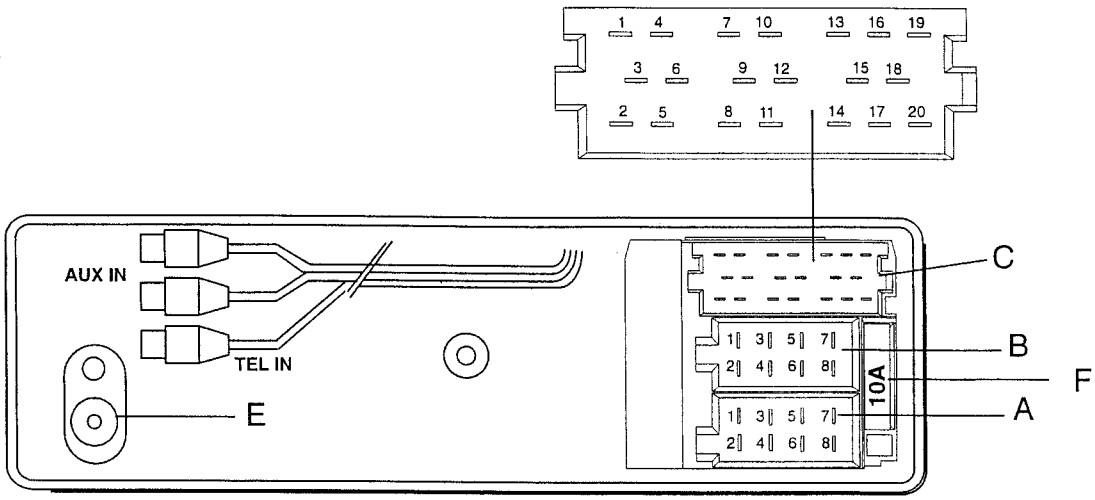

		Name of signal on schematic PS01
A : POWER SUPPLY		
A1	Telephone mute	A1
A2	Mouse GND*	A2
A3	Mouse	A3
A4	Plus permanent +	POWER
A5	Electrical antenna	A5
A6	External illumination plus	A6
A7	Ignition On / Off	NO_POWER
A8	Power ground	
B : LOUDSPEAKER SUPPLY		
B1	Rear right +	B1
B2	Rear right -	B2
B3	Front right +	B3
B4	Front right -	B4
B5	Front left +	B5
B6	Front left -	B6
B7	Rear left +	B7
B8	Rear left -	B8

			Name of signal on schematic UP02
C:			
C1	Line out Rear left	C1	LO_RL
C2	Line out Rear right		LO_RR
C3	Line out Gnd		
C4	Line out Front left		LO_FL
C5	Line out Front right		LO_FR
C6	= A5		
C7	= A7	C2	NO_POWER
C8	Carin in		CARIN_AUD
C9	Carin ref		CARIN_REF
C10	D2B+		DB+
C11	D2B GND		
C12	D2B-		DB-
C13	D2B+	C3	DB+
C14	D2B-		DB-
C15	D2B GND		
C16	+ Permanent		+14V4 CDC
C17	= A5		
C18	In ref		CDC_REF
C19	In left		CDC_LEFT
C20	In right		CDC_RIGHT

C1 Line out
for YELLOW connector

C2 Carin link
For GREEN connector

C3 CD changer
for BLUE connector

E : Aerial plug slide in

F : Fuse 10A

22RC959/00-2

A5	B1	FRT_EJECT	H3	RESET_IN	F1/K6	V_LOW	E1/H4
ANTENNA_ON	A1	FRT_ON-OFF	I3	RESET_MC0	I12	V_LOW_TIMER	I9
CHANGE_INFO	H9	NO_POWER	G1	SCL_EE0	J3	WATCHDOG	J9
DECK_INSERT	I3	POWER	D16	SDA_EE0	J3		
FLAP_DOWN	I3	POWER_MUTE	J16	SET_ON	A16		
FRT_DETACH	I3	POWER_SENSE	C16	TEL_MUTE	I4		

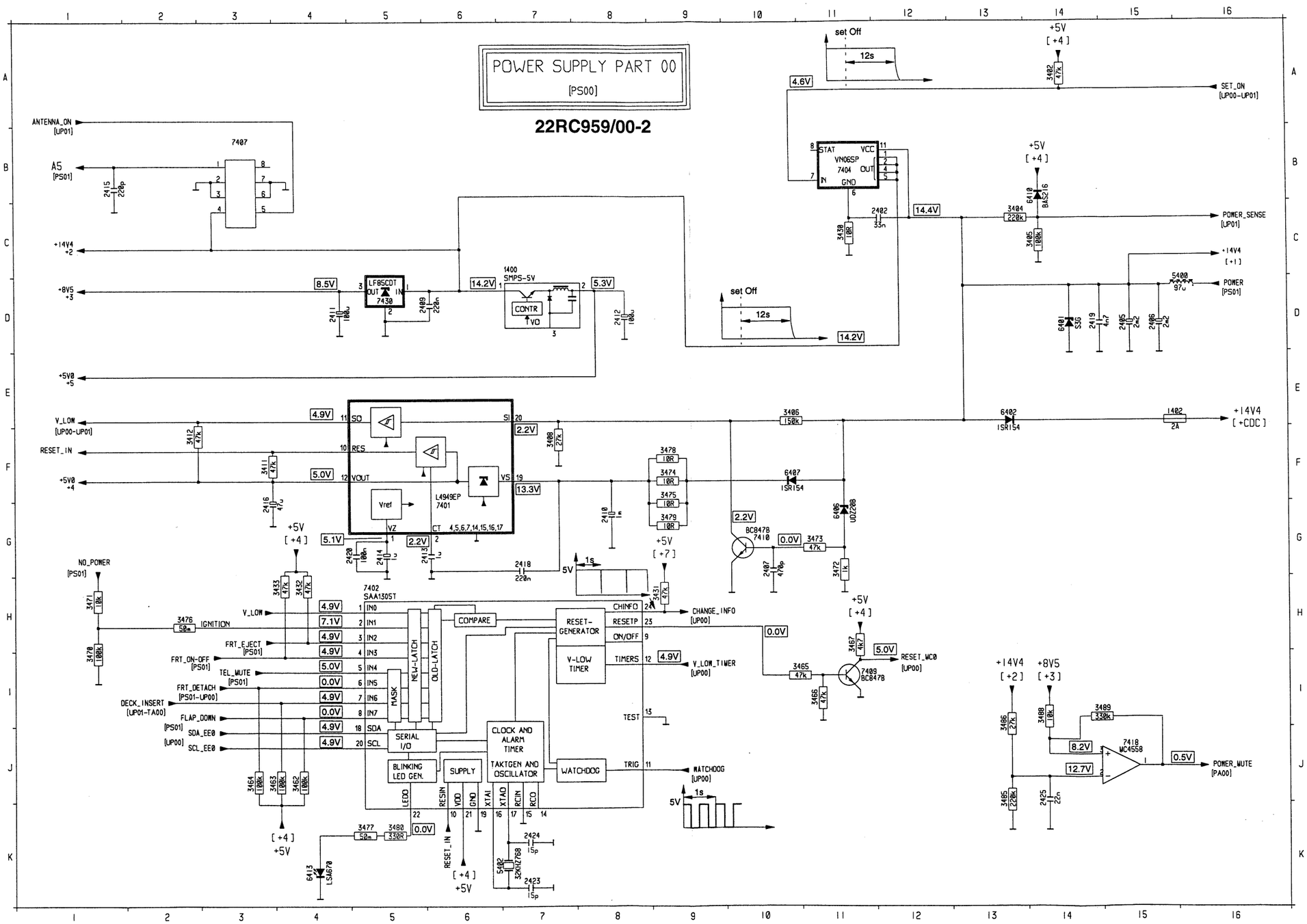

A1	C1/F7	B1	E7	B7	B7	FRT_EJECT	G14	POWER	C5	SDA_G	G5
A2	E7/H1	B2	E7	B8	B7	FRT_ON-OFF	F14	REMOTE_B	F4	TEL_MUTE	C3
A3	F7	B3	D7	DIMMING	H14/H7	FRT_REQUEST	F14	RESET_FRT	A14		
A5	F7/F1	B4	D7	EL_ON	J9	ILLUM	C11	SCL_FRT	D13		
A6	A10/F5	B5	C7	FLAP_DOWN	K15	ILLUM_DECK	J5	SCL_G	G5		
ANTENNA_ON	B14	B6	D7	FRT_DETACH	G14	NO_POWER	C5	SDA_FRT	C13		

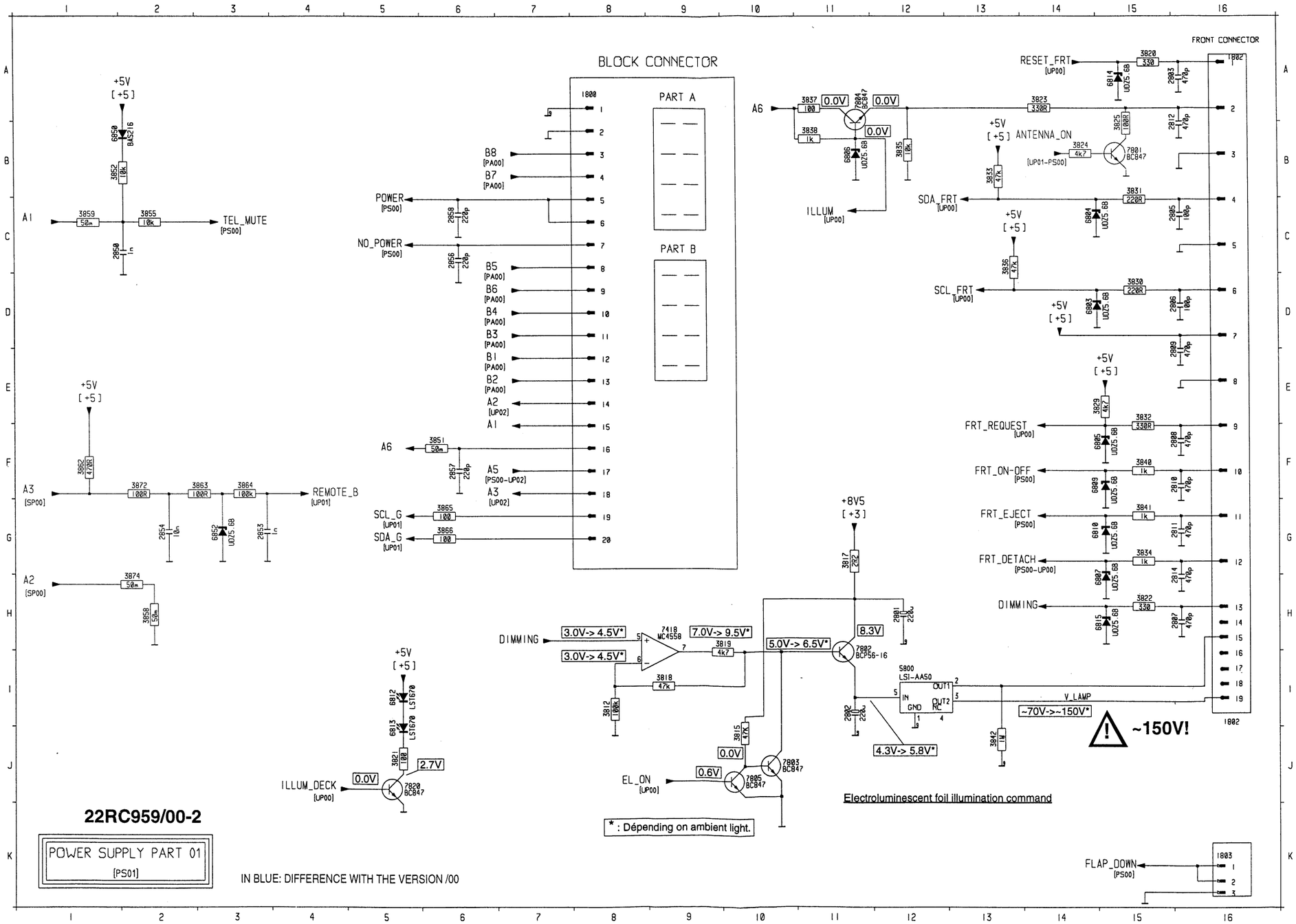

1800	A 8	6852	G 3	2803	A16	3832	E15	3837	A11	3851	F 6
1802	I16	7418	H 9	2805	C16	3833	B13	3838	B11	3852	B 1
1803	K16	7801	B15	2806	D16	3834	G15	3840	F15	3855	C 2
2801	H12	7802	I11	2807	H16	3835	B12	3841	G15	3858	H 2
2802	I11	7803	J11	2808	F16	3836	C13	3842	J13	3859	C 1
2803	A16	7804	A11	2809	E16	3837	A11	3851	F 6	3862	F 1
2805	C16	7805	J10	2810	F16	3838	B11	3852	B 1	3863	F 3
2806	D16	7820	J 5	2811	G16	3840	F15	3855	C 2	3864	F 3
2807	H16			2812	B16	3841	G15	3858	H 2	3865	G 6
2808	F16			2814	H16	3842	J13	3859	C 1	3866	G 6
2809	E16			2850	C 1	3851	F 6	3862	F 1	3872	F 2
2810	F16			2853	G 3	3852	B 1	3863	F 3	3874	H 2
2811	G16			2854	G 2	3855	C 2	3864	F 3	5800	I 2
2812	B16			2856	C 6	3858	H 2	3865	G 6	6803	D15
2814	H16			2857	F 6	3859	C 1	3866	G 6	6804	C15
2850	C 1			2858	C 6	3862	F 1	3872	F 2	6805	F15
2853	G 3			3812	I 8	3863	F 3	3874	H 2	6806	B11
2854	G 2			3815	I10	3864	F 3	5800	I 2	6807	H15
2856	C 6			3817	G11	3865	G 6	6803	D15	6809	F15
2857	F 6			3818	I 9	3866	G 6	6804	C15	6810	G15
2858	C 6			3819	H10	3872	F 2	6805	F15	6812	I 5
3812	I 8			3820	A15	3874	H 2	6806	B11	6813	J 5
3815	I10			3821	J 5	5800	I 2	6807	H15	6814	A15
3817	G11			3822	H15	6803	D15	6809	F15	6815	H15
3818	I 9			3823	A14	6804	C15	6810	G15	6850	B 1
3819	H10			3824	B14	6805	F15	6812	I 5		
3820	A15			3825	B15	6806	B11	6813	J 5		
3821	J 5			3829	E15	6807	H15	6814	A15		
3822	H15			3830	D15	6809	F15	6815	H15		
3823	A14			3831	B15	6810	G15	6850	B 1		

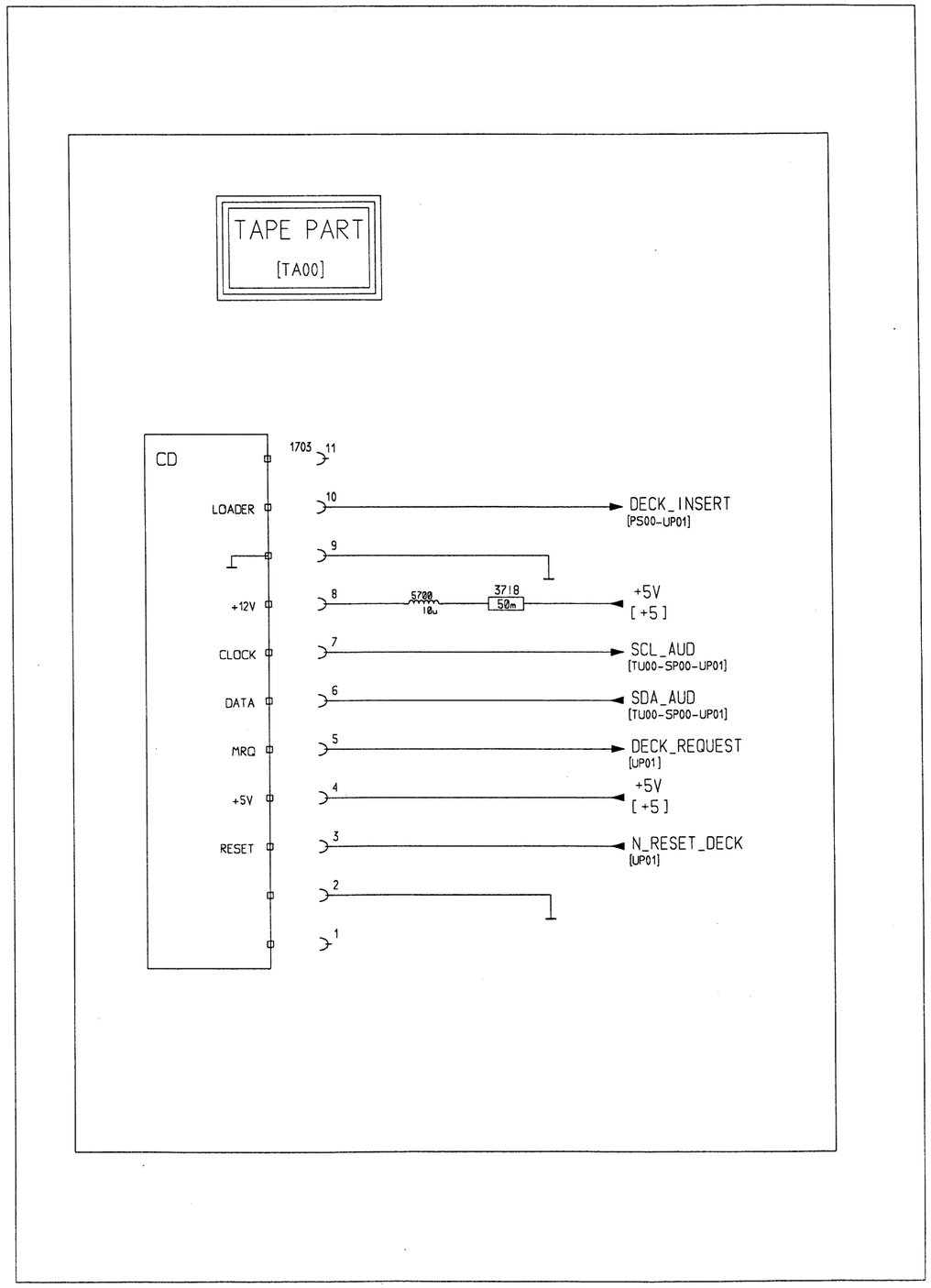
TAPE PART
[TA00]
CD
LOADER
+12V
CLOCK
DATA
MRQ
+5V
RESET
1703
5700
10u
3718
50m
DECK_INSERT
[PS00-UP01]
+5V
[+5]
SCL_AUD
[TU00-SP00-UP01]
SDA_AUD
[TU00-SP00-UP01]
DECK_REQUEST
[UP01]
+5V
[+5]
N_RESET_DECK
[UP01]

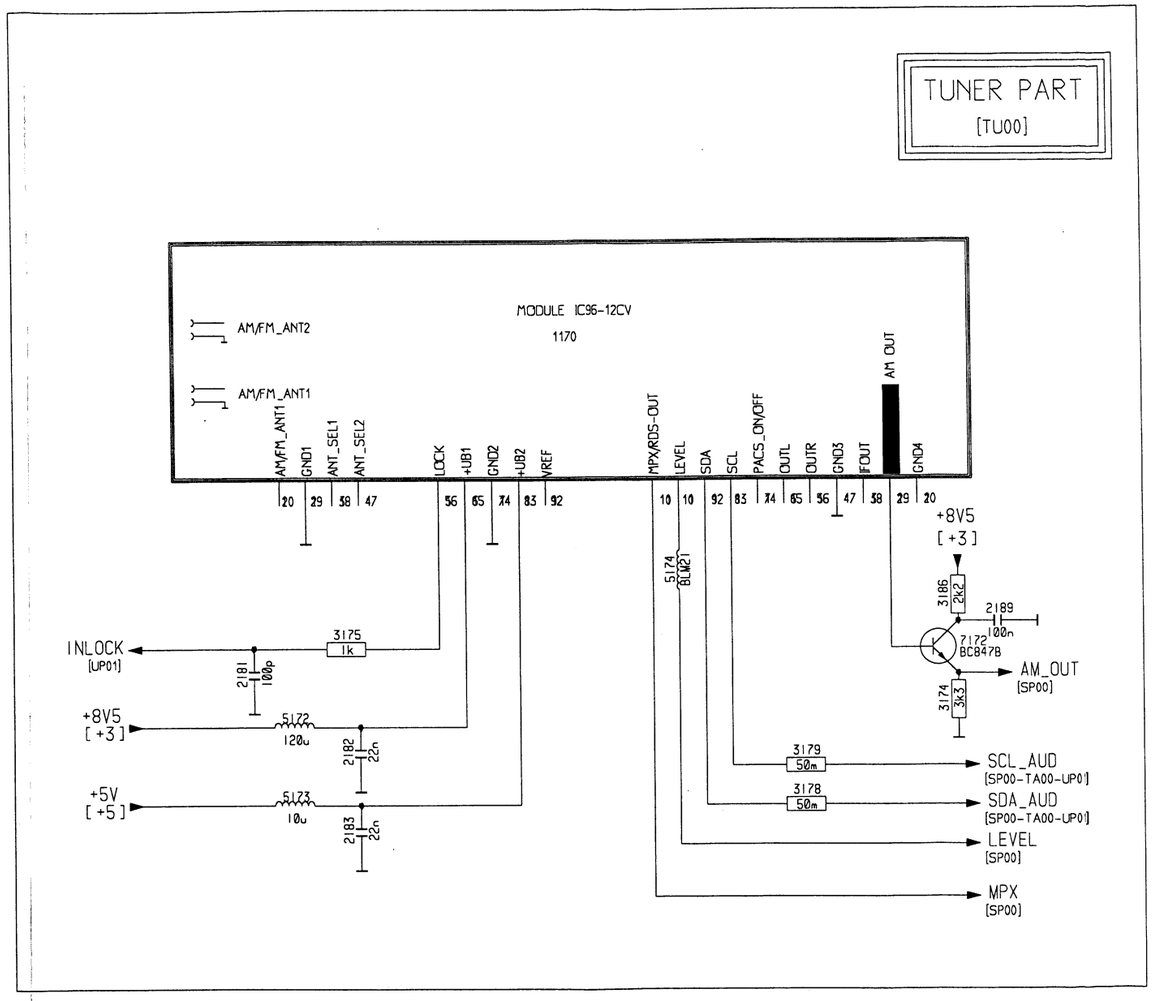
TUNER PART
[TU00]
MODULE IC96-12CV
1170
AM/FM_ANT2
AM/FM_ANT1
AM/FM_ANT1
GND1
ANT_SEL1
ANT_SEL2
LOCK
+UB1
GND2
+UB2
VREF
MPX/RDS-OUT
LEVEL
SDA
SCL
PACS_ON/OFF
OUTL
OUTR
GND3
IFOUT
AM OUT
GND4
+8V5
[+3]
3186
2k2
2189
100n
7172
BC847B
AM_OUT
[SP00]
3174
3k3
INLOCK
[UP01]
3175
1k
2181
100p
+8V5
[+3]
5172
120u
2182
22n
+5V
[+5]
5173
10u
2183
22n
5174
BLM21
3179
50m
SCL_AUD
[SP00-TA00-UP01]
3178
50m
SDA_AUD
[SP00-TA00-UP01]
LEVEL
[SP00]
MPX
[SP00]

22RC959/00-2

22RC959/00-2 PWB LAYOUT - TOPSIDE VIEW

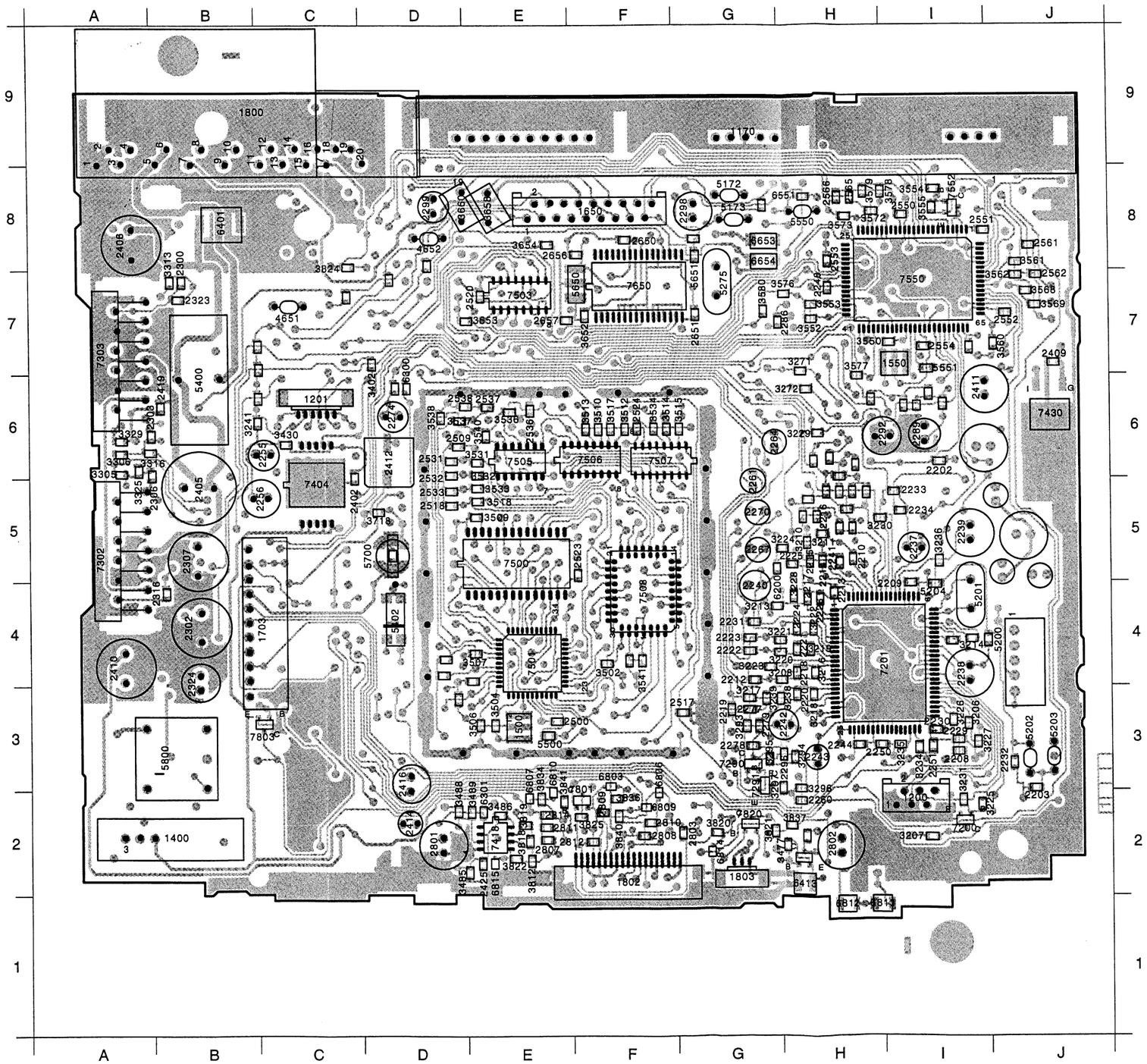

1170 G 8	2410 A 3	3296 H 2	5201 I 4
1200 I 2	2411 I 6	3297 H 2	5202 J 2
1201 C 6	2412 D 5	3305 A 5	5203 J 2
1400 B 1	2414 D 2	3306 A 5	5204 I 4
1500 E 2	2416 D 2	3313 B 7	5275 G 7
1550 I 6	2419 B 6	3316 A 5	5400 B 6
1650 F 7	2425 E 1	3325 A 5	5402 D 3
1703 B 3	2500 E 2	3329 A 5	5500 E 2
1800 B 8	2509 D 5	3402 D 6	5550 H 7
1802 F 1	2517 G 3	3430 C 5	5551 I 6
1803 G 1	2518 D 5	3477 H 1	5650 F 7
2202 I 5	2520 E 7	3485 E 1	5651 G 7
2203 J 2	2523 F 4	3486 E 2	5700 D 4
2208 I 2	2524 F 5	3488 D 2	5800 B 2
2209 I 4	2531 D 5	3489 E 2	6200 G 4
2210 H 4	2532 D 5	3502 F 3	6300 D 6
2212 G 3	2533 D 5	3504 E 2	6301 E 2
2213 H 4	2536 E 5	3506 E 2	6401 B 7
2214 H 4	2537 E 6	3507 E 3	6413 H 1
2215 H 4	2538 D 6	3509 E 4	6551 H 8
2216 H 4	2550 I 7	3510 F 5	6653 G 7
2217 H 4	2551 I 7	3512 F 5	6654 G 7
2218 H 3	2552 J 6	3513 F 5	6803 F 2
2219 G 3	2553 H 7	3514 F 5	6806 F 2
2220 H 3	2554 I 6	3515 G 5	6807 E 2
2221 H 3	2561 J 7	3517 F 5	6809 F 2
2222 G 3	2562 J 7	3518 E 5	6810 E 2
2223 G 3	2565 H 8	3531 E 5	6812 H 1
2224 H 3	2566 H 8	3532 E 5	6813 H 1
2225 H 4	2650 F 7	3533 E 5	6814 G 1
2226 H 4	2651 G 6	3534 F 5	6815 E 1
2229 I 2	2656 F 7	3536 E 5	7200 I 2
2230 I 2	2657 E 6	3537 D 5	7201 H 3
2231 G 3	2801 D 1	3538 D 5	7290 G 2
2232 J 2	2802 H 1	3540 E 5	7291 G 2
2233 I 5	2803 G 1	3541 F 3	7302 A 4
2234 I 5	2807 E 1	3550 I 6	7303 A 6
2237 I 4	2808 F 1	3552 H 6	7404 C 5
2238 I 3	2809 F 2	3553 H 6	7418 E 1
2239 I 4	2810 F 2	3554 I 8	7430 J 5
2240 G 4	2811 E 1	3555 I 7	7500 E 4
2241 H 4	2812 F 1	3560 J 6	7501 E 3
2242 H 2	2814 E 2	3561 J 7	7503 E 7
2243 H 2	3206 I 2	3562 J 7	7505 E 5
2244 H 2	3207 I 1	3568 J 7	7506 F 5
2248 H 7	3208 G 3	3569 J 6	7507 F 5
2250 H 2	3210 H 4	3572 H 7	7508 F 4
2251 I 2	3211 H 4	3573 H 7	7550 I 7
2255 C 5	3213 G 4	3576 H 7	7552 I 7
2256 C 5	3214 I 3	3577 H 6	7650 F 7
2260 H 2	3216 H 3	3578 H 8	7801 F 2
2261 G 5	3217 G 3	3579 H 8	7803 C 2
2264 G 5	3218 H 3	3580 G 6	7820 G 2
2267 G 4	3219 H 3	3652 F 6	
2270 G 4	3220 G 3	3653 E 6	
2274 D 5	3221 G 3	3654 E 7	
2277 G 3	3222 H 3	3658 E 7	
2278 G 2	3223 G 3	3660 D 7	
2279 G 2	3224 H 4	3718 D 5	
2286 G 6	3225 I 2	3812 E 1	
2289 I 5	3226 I 2	3818 E 1	
2292 H 5	3227 I 2	3819 E 2	
2296 H 2	3228 H 4	3820 G 1	
2298 G 7	3229 H 5	3821 G 1	
2299 D 7	3230 H 4	3822 E 1	
2300 B 7	3231 I 2	3824 C 7	
2302 B 3	3234 I 2	3825 F 2	
2303 A 5	3235 I 2	3834 E 2	
2306 A 5	3236 I 4	3836 F 2	
2307 B 4	3238 G 3	3837 H 1	
2316 B 4	3239 G 3	3840 F 2	
2323 B 7	3241 C 5	3841 E 2	
2324 B 3	3271 H 6	4651 C 6	
2402 C 5	3272 H 6	4652 D 7	
2405 B 5	3293 G 2	5172 G 8	
2406 A 7	3294 H 2	5173 G 7	
2409 J 6	3295 G 2	5200 I 3	

22RC959/00-2 PWB LAYOUT -BOTTOMSIDE VIEW

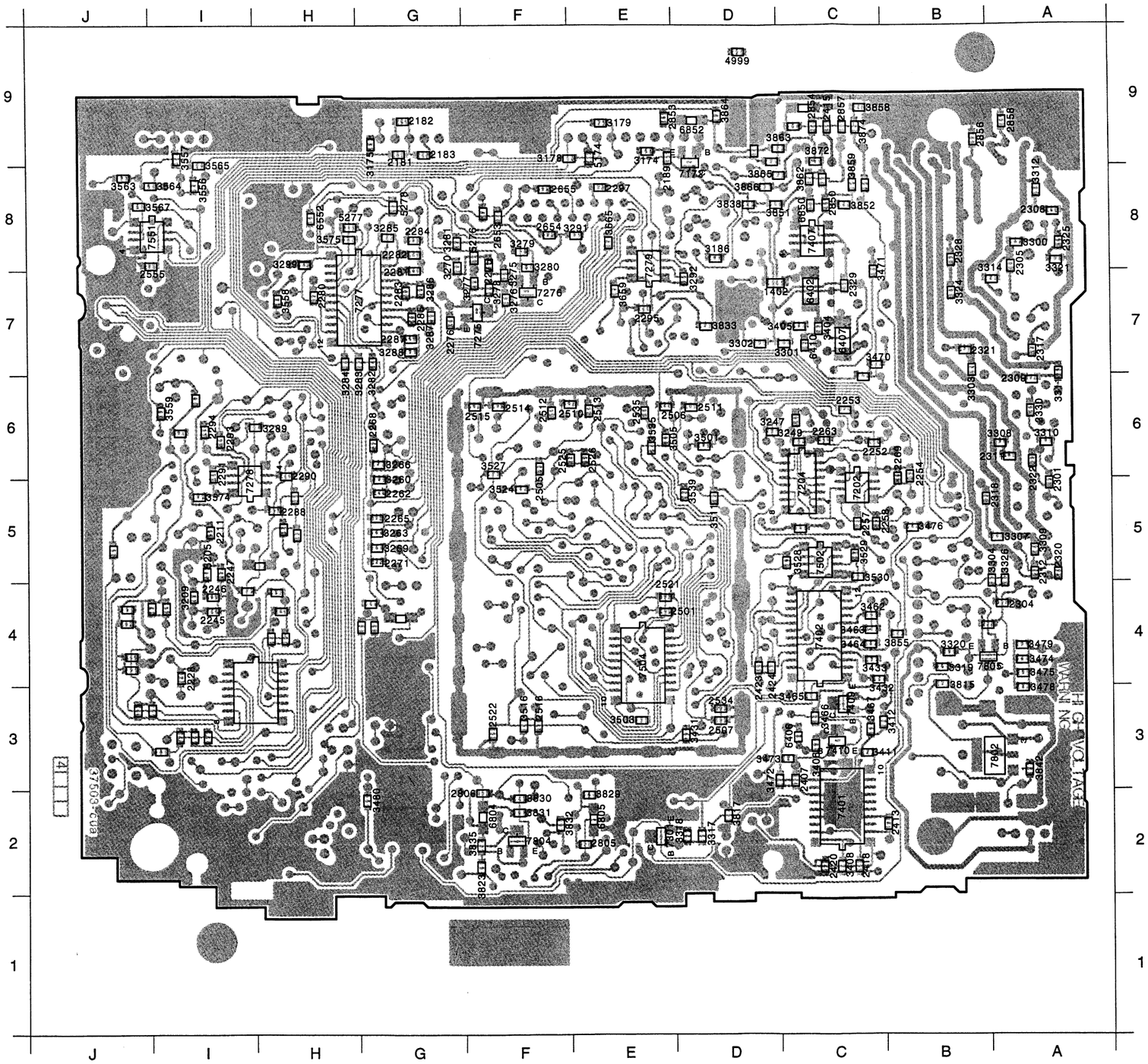

1402 D 7
2181 G 8
2182 G 8
2183 G 8
2189 E 8

2211 I 4
2228 I 3
2245 I 4
2246 I 4
2247 I 4

2252 C 5
2253 C 5
2254 B 5
2257 C 4
2258 C 4

2262 H 5
2263 C 5
2265 H 4
2268 H 5
2269 C 5

2271 H 4
2275 F 7
2276 G 6
2280 H 7
2281 G 7

2282 G 7
2283 G 7
2284 G 7
2285 G 6
2287 G 6

2288 I 5
2290 H 5
2291 I 5
2293 I 5
2294 I 5

2295 E 6
2297 E 8
2301 A 5
2304 B 4
2305 A 7

2308 A 7
2309 A 6
2311 B 5
2312 A 4
2317 A 6

2318 B 5
2320 A 4
2321 B 6
2322 A 5
2325 A 7

2328 B 7
2329 C 7
2330 A 5
2407 D 2
2413 C 1

2415 C 8
2418 C 1
2420 C 1
2423 D 3
2424 D 3

2501 E 4
2505 F 5
2506 E 6
2507 D 2
2510 F 6

2511 E 6
2512 F 5
2513 F 5
2514 F 6
2515 G 6

2516 F 2
2521 E 4
2522 F 2
2525 F 5
2526 F 5

2534 D 3
2535 E 5

2555 J 7
2653 F 7
2654 F 7
2655 F 8
2805 F 1

2806 G 2
2850 C 7
2853 E 8
2854 C 8
2856 B 8

2857 C 8
2858 B 8
3174 E 8
3175 H 8
3178 F 8

3179 E 8
3186 D 7
3209 I 4
3247 D 5
3249 D 5

3260 H 5
3263 H 4
3266 H 5
3269 H 4
3270 G 7

3275 F 7
3276 F 7
3277 G 7
3278 F 7
3279 F 7

3280 F 7
3281 G 7
3282 H 6
3283 H 6
3284 H 6

3285 G 7
3286 G 7
3287 G 6
3288 G 6
3289 I 5

3291 F 7
3292 E 7
3299 H 7
3300 A 7
3301 D 6

3302 D 6
3303 B 6
3304 B 4
3307 B 4
3308 B 5

3309 A 4
3310 A 5
3311 A 6
3312 A 8
3314 B 7

3317 D 1
3318 E 1
3319 B 3
3320 B 3
3321 A 7

3324 B 7
3326 B 4
3404 C 6
3405 D 6
3406 C 2

3408 C 1
3411 C 2
3412 C 2
3431 E 2
3432 C 3

3433 C 3
3462 C 3
3463 C 3
3464 C 3
3465 C 3

3466 C 3
3467 C 2
3470 C 6
3471 C 7
3472 D 2

3473 D 2
3474 A 3
3475 A 3
3476 B 4
3478 A 3

3479 A 3
3480 H 2
3501 D 5
3503 E 2
3505 E 5

3511 D 5
3516 F 2
3524 F 5
3527 F 5
3529 C 4

3530 C 4
3535 E 5
3539 E 5
3556 I 8
3557 I 8

3558 H 7
3559 J 5
3563 J 8
3564 J 8
3565 I 8

3567 J 7
3574 I 5
3575 H 7
3659 E 7
3665 E 7

3815 B 3
3817 D 2
3823 G 1
3829 F 2
3830 F 2

3831 F 2
3832 F 1
3833 D 6
3835 G 1
3838 D 7

3842 A 2
3851 D 7
3852 C 7
3855 C 3
3858 C 8

3859 C 8
3862 C 8
3863 D 8
3864 D 8
3865 D 8

3866 D 8
3872 C 8
3874 C 8
4999 D 9
5174 F 8

5205 I 4
5276 G 7
5277 H 7
5278 G 7
6402 C 7

6406 D 2
6407 C 6
6410 C 6
6552 H 7
6804 G 2

6805 F 2
6850 C 7
6852 E 8
7172 E 8
7202 C 5

7204 D 5
7275 G 6
7276 F 7
7277 H 7
7278 I 5

7279 E 7
7301 E 1
7401 C 2
7402 C 3
7407 C 7

7409 C 3
7410 C 2
7502 C 4
7504 E 3
7551 J 7

7802 B 2
7804 F 1
7805 B 3

CARIN_AUD	C9	CDC_ON	A1	CD_R	C9/F5	LO_RL	F11
CARIN_L	F11	CDC_REF	F1	CD_WS	C4	LO_RR	G11
CARIN_MUTE	F7	CDC_RIGHT	G1	FL	F6	RL	F9
CARIN_R	E11	CD_CL	C4	FR	G6	RR	G9
CARIN_REF	D8	CD_DATA	B4	LO_FL	F7		
CDC_LEFT	E1	CD_L	B9/F5	LO_FR	G7		

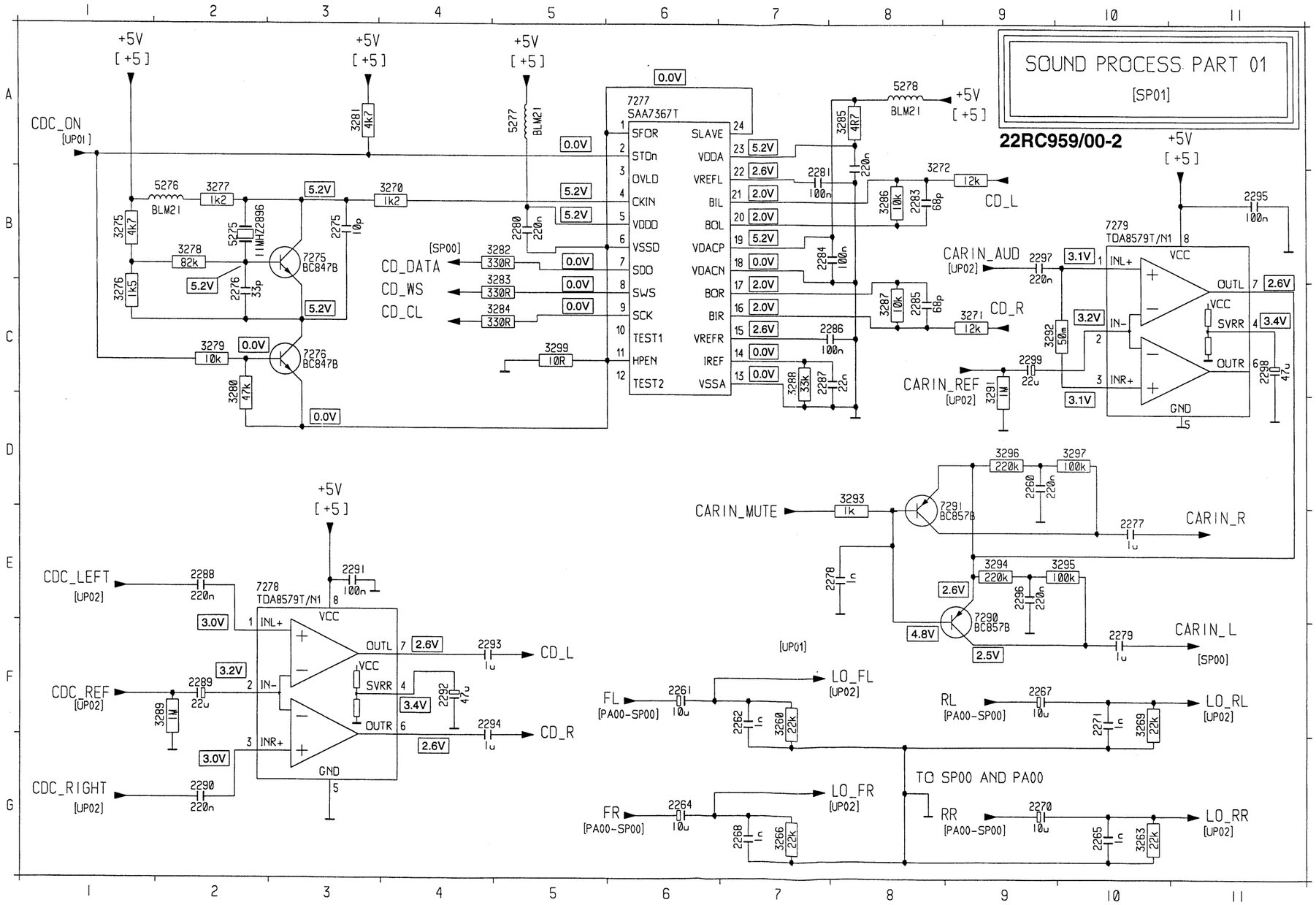

2260	D 8	3272	B 8		
2261	F 6	3275	B 1		
2262	F 7	3276	C 1		
2264	G 6	3277	B 2		
2265	G10	3278	B 2		
2267	F 9	3279	C 2		
2268	G 7	3280	C 2		
2270	G 9	3281	A 3		
2271	F10	3282	B 5		
2275	B 3	3283	C 5		
2276	C 2	3284	C 5		
2277	E 9	3285	A 7		
2278	E 6	3286	B 8		
2279	F 9	3287	C 8		
2280	B 5	3288	C 7		
2281	B 7	3289	F 2		
2282	A 7	3291	C 9		
2283	B 8	3292	C 9		
2284	B 7	3293	D 6		
2285	C 8	3294	E 8		
2286	C 7	3295	E 9		
2287	C 7	3296	D 8		
2288	E 2	3297	D 9		
2289	F 2	3299	C 5		
2290	G 2	5275	B 2		
2291	E 3	5276	B 2		
2292	F 4	5277	A 5		
2293	F 4	5278	A 8		
2294	F 4	7275	B 3		
2295	B11	7276	C 3		
2296	E 8	7277	A 6		
2297	B 9	7278	E 2		
2298	C11	7279	B10		
2299	C 9	7290	E 8		
2260	F 7	7291	D 8		
3263	G10				
3266	G 7				
3269	F10				
3270	B 4				
3271	C 8				

CHANGE_INFO	I13	MCI_REQUEST	J13	RESET_MC0	C1/I9	SDA_DEV	C9	V_LOW	E1
D2B_REQUEST	L13	MCI_WORKING	J13	SCL_D2B	B9	SDA_EE0	C9/K4	WATCHDOG	J12
EL_ON	I12	N_RESET_D2B	K12	SCL_DEV	B9	SDA_FRT	D9		
FRT_REQUEST	K13	READ_IO	H14/J8	SCL_EE0	B9/K4	SET_ON	L12		
ILLUM	K13	RESET_DEV	I12	SCL_FRT	C9	ST_BY	B11/J12		
ILLUM_DECK	L12	RESET_FRT	K12	SDA_D2B	D9	TIMER_START	F1		

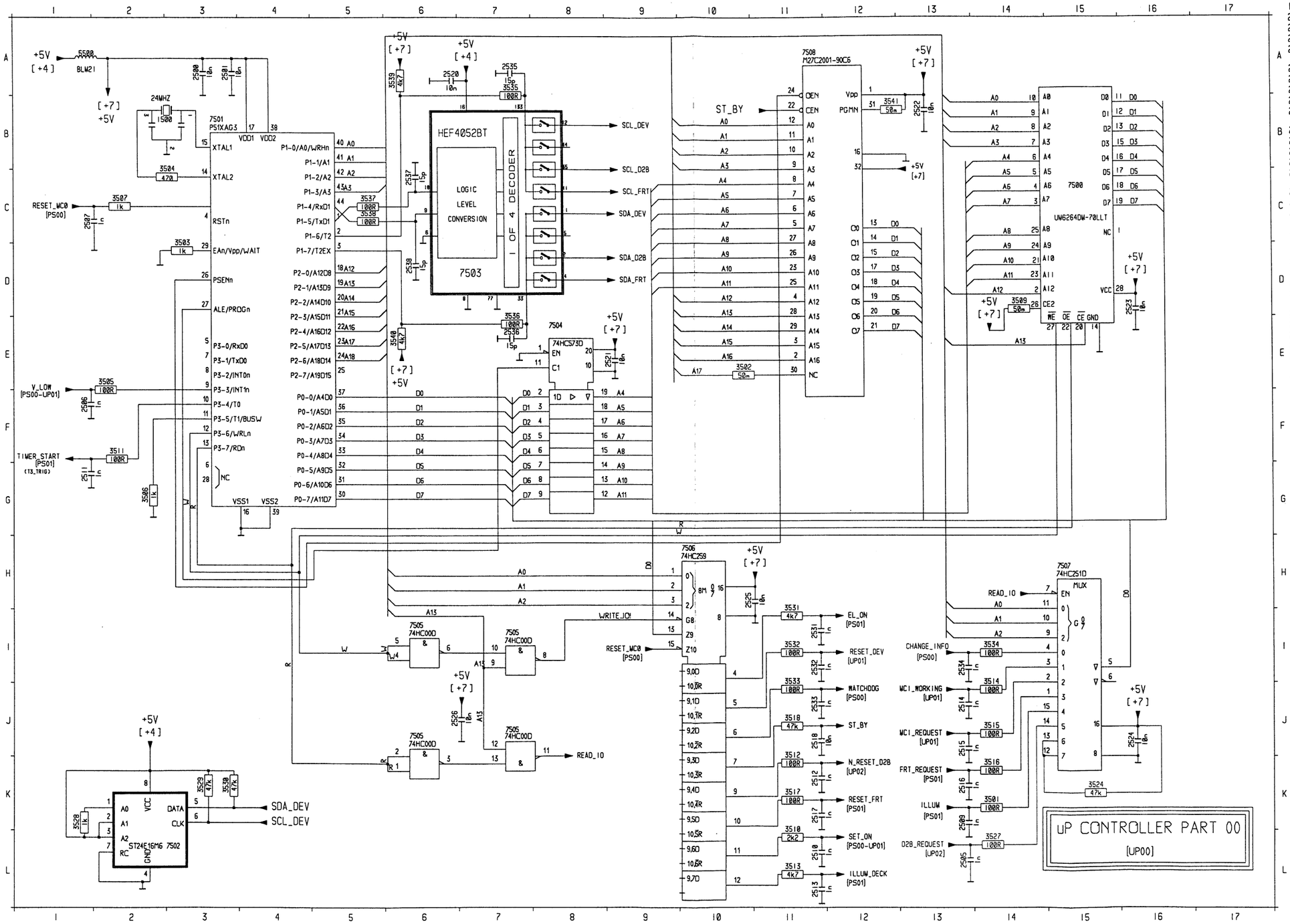

1500	B 2	7507	H15	3524	K15	3538	C 5
2500	A 3	7508	A11	3527	L14	3539	A 6
2501	A 3			3528	K 1	3540	E 6
2505	L13			3529	K 3	3541	B12
2506	F 1			3530	K 3	5500	A 1
2507	C 1			3531	I11	7500	C15
2509	K13			3532	I11	7501	B 3
2510	L11			3533	J11	7502	L 3
2511	G 1			3534	I14	7503	D 7
2512	K11			3535	A 7	7504	E 8
2513	L11			3536	E 7	7505	J 6
2514	J13			3537	C 5	7505	I 6
2515	J13			3538	C 5	7505	I 7
2516	K13			3539	A 6	7505	J 7
2517	K11			3540	E 6	7506	H10
2518	J11			3541	B12		
2520	A 6			5500	A 1		
2521	E 9			7500	C15		
2522	B13			7501	B 3		
2523	D16			7502	L 3		
2524	J16			7503	D 7		
2525	H10			7504	E 8		
2526	J 6			7505	J 6		
2531	I11			7505	I 6		
2532	I11			7505	I 7		
2533	J11			7505	J 7		
2534	I13			7506	H10		
2535	A 7						
2536	E 7						
2537	C 6						
2538	D 6						
3501	K14						
3502	E10						
3503	D 3						
3504	B 3						
3505	E 2						
3506	G 2						
3507	C 2						
3509	D14						
3510	L11						
3511	F 2						
3512	K11						
3513	L11						
3514	J14						
3515	J14						
3516	K14						
3517	K11						
3518	J11						

ANTENNA_ON F10	DECK_REQUEST F3	N_RESET_AUD F10	RDS_MUTE H10	SDA_AUD C15/G12	TEMP_SENSE J3
CARIN_MUTE H10	INLOCK F10	N_RESET_DECK G10	REMOTE I3	SDA_DEV D9	V_LOW F3
CDC_ON I10	MCI_REQUEST G3	PAUSE G10	RESET_DEV E10	SDA_G J11	
CLOCK_RDS H10	MCI_WORKING G3	POM G10	SCL_AUD C15/F13	SET_ON H3	
DATA_RDS F3	MC_MUTE J8	POWER_SENSE K3	SCL_DEV D9	STANDBY_AUD E3/I8	
DECK_INSERT G3	MPX_RDS H10	RDS_HOLD H10	SCL_G J11	TEL_SELECT H3	

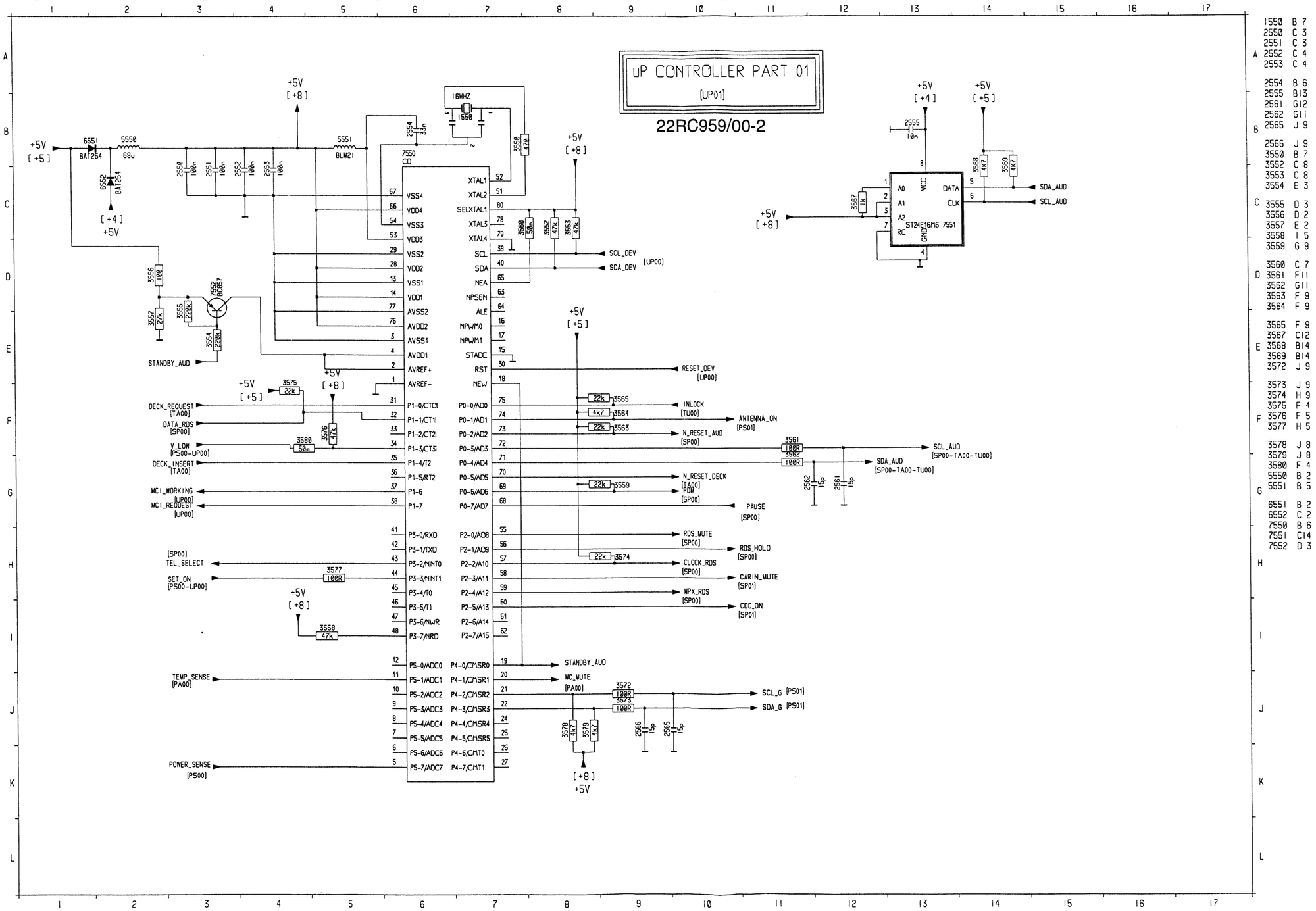

CARIN_AUD B9
CARIN_REF B9
CDC_LEFT E9
CDC_REF D9
CDC_RIGHT E9
D2B_REQUEST A2
LO_FL A9
LO_FR A9
LO_RL A9
LO_RR A9
NO_POWER B9
N_RESET_D2B B2
SCL_D2B D1
SDA_D2B D1

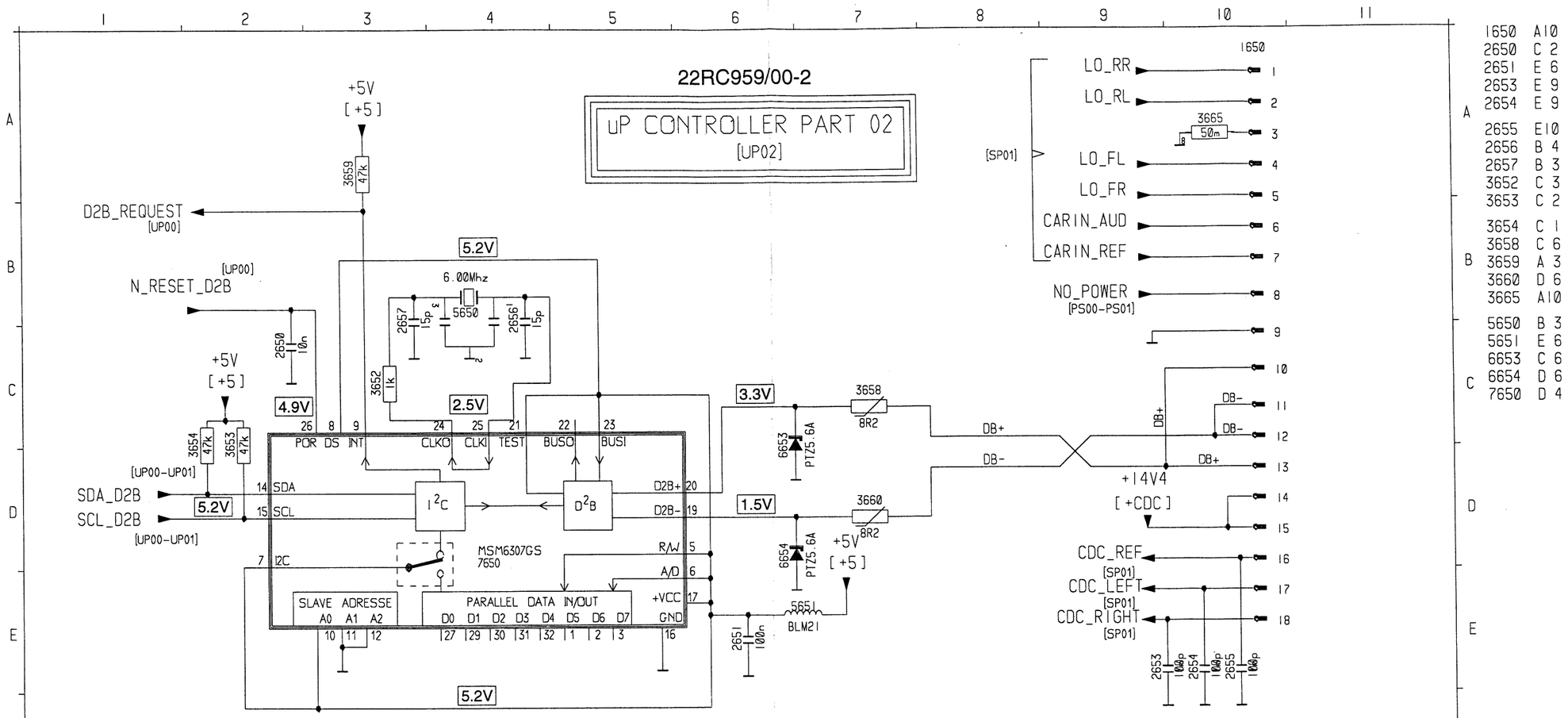

MSM6307GS D²B IC

SYMBOL	I/O	DESCRIPTION
POR	I	Power on - reset
R / W	I	Read / Write selector
DS	I	Data strobe to access data bus
A / D	I	Selects address or data on D0 ~ d7
SDA	I/O	I²C data signal input / output
SCL	I/O	I²C clock signal input / output
I2C	I	Selects I²C or parallel interface
INT	O	Interrupt output
BUSIN	I	D2B input (TTL level)
BUSOUT	O	D2B output (TTL level)
DBN & DBP	I/Os	Differential D2B lines of the internal driver/ receiver, to be terminated with 60Ω
TEST	I	Selects the test mode for factory purposes
6MCI	I	Clock input 6MHz resonator or X-TAL
6MCO	O	Clock output 6MHz resonator or X-TAL
D0 ~ D7	I/Os	8-bit bi-directional address or data bus
A0 ~ A2	I	Programmables I²C slave addresses

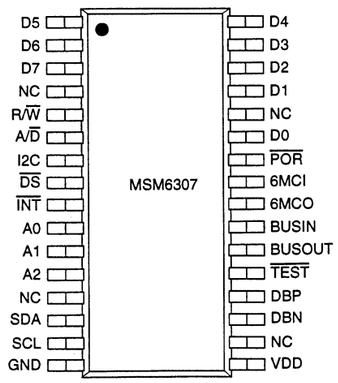

Miscellaneous		
1170	4822 210 10721	TUNER
1400	4822 218 11862	S.M.P.S. ASSY 5,3V 1,2A
1402	4822 253 30446	2,00A 32V 3,02X1,6X1,2 F
1500	4822 242 10868	CSTCS24.00MX040
1550	4822 242 10564	CSTCS16.00MX040-TC
1800	4822 265 10941	CONN. BLOCK A.B.C. V3

⊣⊢		
2181	5322 122 32531	100pF 5%NP0 50V
2182	5322 122 32654	22nF10%X7R 63V
2183	5322 122 32654	22nF 10%X7R 63V
2189	4822 126 13196	100nF 10% 0805 X7R 25
2202	5322 122 34123	1nF 10%X7R 50V
2203	4822 126 13196	100nF 10% 0805 X7R
2208	5322 122 32531	100pF 5%NP0 50V
2209	4822 126 12105	33nF 5%X7R 63V
2210	5322 122 32654	22nF 10%X7R 63V
2211	4822 126 13196	100nF 10% 0805 X7R
2212	5322 122 34098	10nF 10%X7R 63V
2213	5322 122 34098	10nF 10%X7R 63V
2214	5322 122 31863	330pF 5%NP0 50V
2215	5322 122 33538	150pF 2%NP0 63V
2216	5322 122 31863	330pF 5%NP0 50V
2217	5322 122 34123	1nF 10%X7R 50V
2218	5322 122 34123	1nF 10%X7R 50V
2219	5322 122 34098	10nF 10%X7R 63V
2220	5322 122 34123	1nF 10%X7R 50V
2221	5322 122 34123	1nF 10%X7R 50V
2222	5322 122 34098	10nF 10%X7R 63V
2223	5322 122 34098	10nF 10%X7R 63V
2224	5322 122 34123	1nF 10%X7R 50V
2225	4822 126 13196	100nF 10% 0805 X7R 25V
2226	5322 122 34123	1nF 10%X7R 50V
2228	4822 126 13196	100nF 10% 0805 X7R 25V
2229	5322 122 32531	100pF 5%NP0 50V
2230	5322 122 32531	100pF 5%NP0 50V
2231	4822 126 13196	100nF 10% 0805 X7R 25V
2232	4822 126 13196	100nF 10% 0805 X7R 25V
2233	5322 122 31863	330pF 5%NP0 50V
2234	5322 122 31863	330pF 5%NP0 50V
2237	4822 124 23279	22µF 20% 16V
2238	4822 124 23582	220µF 10V
2239	4822 124 11952	100µF 20% 16V
2240	4822 124 23279	22µF 20% 16V
2241	4822 126 14043	1µF +80-20% 16V
2242	4822 124 23279	22µF 20% 16V
2243	4822 124 23282	1µF 20% 50V
2244	5322 122 34123	1nF 10%X7R 50V
2245	5322 122 32269	6,8pF 5% 50V
2246	5322 122 32269	6,8pF 5% 50V
2247	5322 122 34123	1nF 10%X7R 50V
2248	4822 122 33575	220pF 5%NPO 50V
2250	5322 122 32531	100pF 5%NP0 50V
2251	5322 122 32531	100pF 5%NP0 50V
2252	4822 126 13849	220nF 10% 16V
2253	4822 126 13849	220nF 10% 16V
2254	4822 126 13196	100nF 10% 0805 X7R 25V
2255	4822 124 23279	22µF 20% 16V
2256	4822 124 22646	47µF 20% 16V

⊣⊢		
2257	4822 126 14043	1µF +80-20% 16V
2258	4822 126 14043	1µF +80-20% 16V
2260	4822 126 13849	220nF 10% 16V
2261	4822 124 41017	10µF 16V
2262	5322 122 34123	1nF 10%X7R 50V
2263	4822 126 13849	220nF 10% 16V
2264	4822 124 41017	10µF 16V
2265	5322 122 34123	1nF 10%X7R 50V
2267	4822 124 41017	10µF 16V
2268	5322 122 34123	1nF 10%X7R 50V
2269	5322 122 34123	1nF 10%X7R 50V
2270	4822 124 41017	10µF 16V
2271	5322 122 34123	1nF 10%X7R 50V
2274	4822 124 23279	22µF 20% 16V
2275	5322 122 32448	10pF 5% 50V
2276	5322 122 32659	33pF 5% 50V
2277	4822 126 14043	1µF +80-20% 16V
2278	5322 122 34123	1nF 10%X7R 50V
2279	4822 126 14043	1µF +80-20% 16V
2280	4822 126 13849	220nF 10% 16V
2281	4822 126 13196	100nF 10% 0805 X7R 25V
2282	4822 126 13849	220nF 10% 16V
2283	4822 126 13694	68pF 1% NP0 63V
2284	4822 126 13196	100nF 10% 0805 X7R 25V
2285	4822 126 13694	68pF 1% NP0 63V
2286	4822 126 13196	100nF 10% 0805 X7R 25V
2287	5322 122 32654	22nF 10%X7R 63V
2288	4822 126 13849	220nF 10% 16V
2289	4822 124 23279	22µF 20% 16V
2290	4822 126 13849	220nF 10% 16V
2291	4822 126 13196	100nF 10% 0805 X7R 25V
2292	4822 124 22646	47µF 20% 16V
2293	4822 126 14043	1µF +80-20% 16V
2294	4822 126 14043	1µF +80-20% 16V
2295	4822 126 13196	100nF 10% 0805 X7R 25V
2296	4822 126 13849	220nF 10% 16V
2297	4822 126 13849	220nF 10% 16V
2298	4822 124 22646	47µF 20% 16V
2299	4822 124 23279	22µF 20% 16V
2300	4822 126 14043	1µF +80-20% 16V
2301	4822 126 14043	1µF +80-20% 16V
2302	4822 124 80061	1000µF 20% 25V
2303	4822 126 14043	1µF +80-20% 16V
2304	4822 126 14043	1µF +80-20% 16V
2305	4822 126 14043	1µF +80-20% 16V
2306	4822 126 14043	1µF +80-20% 16V
2307	4822 124 80061	1000µF 20% 25V
2308	5322 122 34098	10nF 10%X7R 63V
2309	5322 122 34098	10nF 10%X7R 63V
2311	5322 122 34098	10nF 10%X7R 63V
2312	5322 122 34098	10nF 10%X7R 63V
2316	4822 126 13196	100nF 10% 0805 X7R 25V
2317	4822 126 13196	100nF 10% 0805 X7R 25V
2318	4822 126 13196	100nF 10% 0805 X7R 25V
2320	4822 126 13196	100nF 10% 0805 X7R 25V
2321	4822 126 13196	100nF 10% 0805 X7R 25V
2322	4822 126 14043	1µF +80-20% 16V
2323	4822 126 14043	1µF +80-20% 16V
2324	4822 124 80453	100µF 20% 10V
2325	4822 126 13196	100nF 10% 0805 X7R 25V

2328	4822 126 13196	100nF 10% 0805 X7R 25V
2329	5322 122 34098	10nF 10%X7R 63V
2330	4822 126 13196	100nF 10% 0805 X7R 25V
2402	4822 126 12105	33nF 5%X7R 63V
2405	4822 124 80769	2200µF 20% 16V
2406	4822 124 23308	2200µF 20% 16V
2407	5322 122 32268	470pF 10% 50V
2409	4822 126 13849	220nF 10% 16V
2410	4822 124 80061	1000µF 20% 25V
2411	4822 124 11952	100µF 20% 16V
2412	4822 124 12085	100µF 20% SM 16V
2413	4822 126 14043	1µF +80-20% 16V
2414	4822 124 23282	1µF 20% 50V
2415	4822 122 33575	220pF 5%NPO 50V
2416	4822 124 22646	47µF 20% 16V
2418	4822 126 13849	220nF 10% 16V
2419	5322 126 10223	4,7nF 10%X7R 63V
2420	4822 126 13196	100nF 10% 0805 X7R 25V
2423	5322 122 33244	8,2pF 5%NPO 50V
2423	4822 126 13486	15pF 2% NP0 63V
2424	5322 122 33244	8,2pF 5%NPO 50V
2424	4822 126 13486	15pF 2% NP0 63V
2425	5322 122 32654	22nF 10%X7R 63V
2500	5322 122 34098	10nF 10%X7R 63V
2501	5322 122 34098	10nF 10%X7R 63V
2505	5322 122 34123	1nF 10%X7R 50V
2506	5322 122 34123	1nF 10%X7R 50V
2507	5322 122 34123	1nF 10%X7R 50V
2508	5322 122 34123	1nF 10%X7R 50V
2509	5322 122 34123	1nF 10%X7R 50V
2510	5322 122 34123	1nF 10%X7R 50V
2511	5322 122 34123	1nF 10%X7R 50V
2512	5322 122 34123	1nF 10%X7R 50V
2513	5322 122 34123	1nF 10%X7R 50V
2514	5322 122 34123	1nF 10%X7R 50V
2515	5322 122 34123	1nF 10%X7R 50V
2516	5322 122 34123	1nF 10%X7R 50V
2517	5322 122 34123	1nF 10%X7R 50V
2518	5322 122 34098	10nF 10%X7R 63V
2520	5322 122 34098	10nF 10%X7R 63V
2521	5322 122 34098	10nF 10%X7R 63V
2522	5322 122 34098	10nF 10%X7R 63V
2523	5322 122 34098	10nF 10%X7R 63V
2524	5322 122 34098	10nF 10%X7R 63V
2525	5322 122 34098	10nF 10%X7R 63V
2526	5322 122 34098	10nF 10%X7R 63V
2531	5322 122 34123	1nF 10%X7R 50V
2532	5322 122 34123	1nF 10%X7R 50V
2533	5322 122 34123	1nF 10%X7R 50V
2534	5322 122 34123	1nF 10%X7R 50V
2535	4822 126 13486	15pF 2% NP0 63V
2536	4822 126 13486	15pF 2% NP0 63V
2537	4822 126 13486	15pF 2% NP0 63V
2538	4822 126 13486	15pF 2% NP0 63V
2550	4822 126 13196	100nF 10% 0805 X7R 25V
2551	4822 126 13196	100nF 10% 0805 X7R 25V
2552	4822 126 13196	100nF 10% 0805 X7R 25V
2553	4822 126 13196	100nF 10% 0805 X7R 25V
2554	4822 126 12105	33nF 5%X7R 63V
2555	5322 122 34098	10nF 10%X7R 63V

2561	4822 126 13486	15pF 2% NP0 63V
2562	4822 126 13486	15pF 2% NP0 63V
2565	4822 126 13486	15pF 2% NP0 63V
2566	4822 126 13486	15pF 2% NP0 63V
2650	5322 122 34098	10nF 10%X7R 63V
2651	4822 126 13196	100nF 10% 0805 X7R 25V
2653	5322 122 34123	1nF 10%X7R 50V
2653	5322 122 32531	100pF 5%NP0 50V
2654	5322 122 34123	1nF 10%X7R 50V
2654	5322 122 32531	100pF 5%NP0 50V
2655	5322 122 34123	1nF 10%X7R 50V
2655	5322 122 32531	100pF 5%NP0 50V
2656	4822 126 13486	15pF 2% NP0 63V
2657	4822 126 13486	15pF 2% NP0 63V
2801	4822 124 23582	220µF 10V
2802	4822 124 23582	220µF 10V
2803	5322 122 32268	470pF 10% 50V
2805	5322 122 32531	100pF 5%NP0 50V
2806	5322 122 32531	100pF 5%NP0 50V
2807	5322 122 32268	470pF 10% 50V
2808	5322 122 32268	470pF 10% 50V
2809	5322 122 32268	470pF 10% 50V
2810	5322 122 32268	470pF 10% 50V
2811	5322 122 32268	470pF 10% 50V
2812	5322 122 32268	470pF 10% 50V
2814	5322 122 32268	470pF 10% 50V
2850	5322 122 34123	1nF 10%X7R 50V
2853	5322 122 34123	1nF 10%X7R 50V
2854	5322 122 34098	10nF nF 10%X7R 63V
2856	4822 122 33575	220pF 5%NPO 50V
2857	4822 122 33575	220pF 5%NPO 50V
2858	4822 122 33575	220pF 5%NPO 50V

3174	4822 051 20332	3K30 5% 0,1W
3175	4822 051 20102	1KΩ 5% 0,1W
3178	4822 051 20008	0Ω JUMP. (0805)
3179	4822 051 20008	0Ω JUMP. (0805)
3186	4822 117 11449	2K2 1% 0,1W
3206	4822 117 11503	220R 1% 0.1W
3207	4822 051 20101	100Ω 5% 0,1W
3208	4822 051 20101	100Ω 5% 0,1W
3209	4822 051 20104	100Ω 5% 0,1W
3210	4822 051 20332	3K30 5% 0,1W
3211	4822 051 20332	3K30 5% 0,1W
3213	4822 051 20562	5K6 5% 0,1W 0805
3214	4822 051 20101	100Ω 5% 0,1W
3216	4822 117 12955	2K7 1% 0,1W 0805
3217	4822 051 20101	100Ω 5% 0,1W
3218	4822 117 12955	2K7 1% 0,1W 0805
3219	4822 117 12955	2K7 1% 0,1W 0805
3220	4822 051 20101	100Ω 5% 0,1W
3221	4822 051 20101	100Ω 5% 0,1W
3222	4822 117 12955	2K7 1% 0,1W 0805
3223	4822 117 10965	18K 1% 0,1W
3224	4822 051 20102	1KΩ 5% 0,1W
3225	4822 117 10834	47K 1% 0,1W
3226	4822 117 11503	220R 1% 0.1W
3227	4822 117 11503	220R 1% 0.1W

3228	4822 051 20273	27KΩ 5% 0,1W
3229	4822 051 20472	4K70 5% 0,1W
3230	4822 051 20472	4K70 5% 0,1W
3231	4822 051 20472	4K70 5% 0,1W
3234	4822 117 11503	220R 1% 0.1W
3235	4822 117 11503	220R 1% 0.1W
3236	4822 051 20101	100Ω 5% 0,1W
3238	4822 117 12955	2K7 1% 0,1W 0805
3239	4822 117 12955	2K7 1% 0,1W 0805
3241	4822 051 20105	1M00 5% 0,1W
3247	4822 051 20105	1M00 5% 0,1W
3249	4822 051 20008	0Ω JUMP. (0805)
3260	4822 051 20223	22KΩ 5% 0,1W
3263	4822 051 20223	22KΩ 5% 0,1W
3266	4822 051 20223	22KΩ 5% 0,1W
3269	4822 051 20223	22KΩ 5% 0,1W
3270	4822 051 20122	1K20 5% 0,1W
3271	4822 117 11383	12K 1% 0,1W
3272	4822 117 11383	12K 1% 0,1W
3275	4822 051 20472	4K70 5% 0,1W
3276	4822 117 11139	1K5 1% 0,1W
3277	4822 051 20122	1K20 5% 0,1W
3278	4822 117 11149	82K 1% 0,1W
3279	4822 117 10833	10K 1% 0,1W
3280	4822 117 10834	47K 1% 0,1W
3281	4822 051 20472	4K70 5% 0,1W
3282	4822 051 20331	330Ω 5% 0,1W
3283	4822 051 20331	330Ω 5% 0,1W
3284	4822 051 20331	330Ω 5% 0,1W
3285	4822 051 20478	4R70 5% 0,1W
3286	4822 117 10833	10K 1% 0,1W
3287	4822 117 10833	10K 1% 0,1W
3288	4822 051 20333	33KΩ 5% 0,1W
3289	4822 051 20105	1M00 5% 0,1W
3291	4822 051 20105	1M00 5% 0,1W
3292	4822 051 20008	0Ω JUMP. (0805)
3293	4822 117 11139	1K5 1% 0,1W
3294	4822 051 20224	220KΩ 5% 0,1W
3295	4822 051 20104	100KΩ 5% 0,1W
3296	4822 051 20224	220KΩ 5% 0,1W
3297	4822 051 20104	100KΩ 5% 0,1W
3299	4822 051 20109	10Ω 5% 0,1W
3300	4822 117 10833	10K 1% 0,1W
3301	4822 051 20223	22KΩ 5% 0,1W
3302	4822 051 20332	3K30 5% 0,1W
3303	4822 051 20478	4R70 5% 0,1W
3304	4822 117 10833	10K 1% 0,1W
3305	4822 117 10833	10K 1% 0,1W
3306	4822 117 10833	10K 1% 0,1W
3307	4822 051 20478	4R70 5% 0,1W
3308	4822 051 20478	4R70 5% 0,1W
3309	4822 051 20478	4R70 5% 0,1W
3310	4822 117 12955	2K7 1% 0,1W 0805
3311	4822 051 20478	4R70 5% 0,1W
3312	4822 051 20478	4R70 5% 0,1W
3313	4822 117 12955	2K7 1% 0,1W 0805
3314	4822 117 10833	10K 1% 0,1W
3316	4822 117 10833	10K 1% 0,1W
3317	4822 117 10834	47K 1% 0,1W
3318	4822 117 10834	47K 1% 0,1W

3319	4822 117 10833	10K 1% 0,1W
3320	4822 051 20101	100Ω 5% 0,1W
3321	4822 051 20478	4R70 5% 0,1W
3324	4822 051 20478	4R70 5% 0,1W
3325	4822 117 10833	10K 1% 0,1W
3326	4822 117 10833	10K 1% 0,1W
3329	4822 116 10062	470R 50% 16V PTC 0805
3402	4822 117 10834	47K 1% 0,1W
3404	4822 051 20224	220KΩ 5% 0,1W
3405	4822 051 20104	100KΩ 5% 0,1W
3406	4822 051 20154	150KΩ 5% 0,1W
3408	4822 051 20273	27KΩ 5% 0,1W
3411	4822 117 10834	47K 1% 0,1W
3412	4822 117 10834	47K 1% 0,1W
3430	4822 051 20109	10Ω 5% 0,1W
3431	4822 117 10834	47K 1% 0,1W
3432	4822 117 10834	47K 1% 0,1W
3433	4822 117 10834	47K 1% 0,1W
3462	4822 051 20104	100KΩ 5% 0,1W
3463	4822 051 20104	100KΩ 5% 0,1W
3464	4822 051 20104	100KΩ 5% 0,1W
3465	4822 117 10834	47K 1% 0,1W
3466	4822 117 10834	47K 1% 0,1W
3467	4822 051 20472	4K70 5% 0,1W
3470	4822 051 20104	100KΩ 5% 0,1W
3471	4822 117 10833	10K 1% 0,1W
3472	4822 051 20102	1KΩ 5% 0,1W
3473	4822 117 10834	47K 1% 0,1W
3474	4822 051 20109	10Ω 5% 0,1W
3475	4822 051 20109	10Ω 5% 0,1W
3476	4822 051 20008	0Ω JUMP. (0805)
3477	4822 051 20331	330Ω 5% 0,1W
3477	4822 051 20008	0Ω JUMP. (0805)
3478	4822 051 20109	10Ω 5% 0,1W
3479	4822 051 20109	10Ω 5% 0,1W
3480	4822 051 20331	330Ω 5% 0,1W
3485	4822 051 20224	220KΩ 5% 0,1W
3486	4822 051 20273	27KΩ 5% 0,1W
3488	4822 117 10833	10K 1% 0,1W
3489	4822 051 20334	330KΩ 5% 0,1W
3501	4822 051 20101	100Ω 5% 0,1W
3502	4822 051 20008	0Ω JUMP. (0805)
3503	4822 051 20102	1KΩ 5% 0,1W
3504	4822 051 20471	470Ω 5% 0,1W
3505	4822 051 20101	100Ω 5% 0,1W
3506	4822 051 20102	1KΩ 5% 0,1W
3507	4822 051 20102	1KΩ 5% 0,1W
3508	4822 051 20101	100Ω 5% 0,1W
3509	4822 051 20008	0Ω JUMP. (0805)
3510	4822 117 11449	2K2 1% 0,1W
3511	4822 051 20101	100Ω 5% 0,1W
3512	4822 051 20101	100Ω 5% 0,1W
3513	4822 051 20472	4K70 5% 0,1W
3514	4822 051 20101	100Ω 5% 0,1W
3515	4822 051 20101	100Ω 5% 0,1W
3516	4822 051 20101	100Ω 5% 0,1W
3517	4822 051 20101	100Ω 5% 0,1W
3518	4822 117 10834	47K 1% 0,1W
3520	4822 117 10834	47K 1% 0,1W
3521	4822 117 10834	47K 1% 0,1W

3524	4822 117 10834	47K 1% 0,1W
3526	4822 051 20008	0Ω JUMP. (0805)
3527	4822 051 20008	0Ω JUMP. (0805)
3527	4822 051 20101	100Ω 5% 0,1W
3528	4822 051 20102	1KΩ 5% 0,1W
3529	4822 117 10834	47K 1% 0,1W
3530	4822 117 10834	47K 1% 0,1W
3531	4822 051 20472	4K70 5% 0,1W
3532	4822 051 20101	100Ω 5% 0,1W
3533	4822 051 20101	100Ω 5% 0,1W
3534	4822 051 20101	100Ω 5% 0,1W
3535	4822 051 20101	100Ω 5% 0,1W
3536	4822 051 20101	100Ω 5% 0,1W
3537	4822 051 20101	100Ω 5% 0,1W
3538	4822 051 20101	100Ω 5% 0,1W
3539	4822 051 20472	4K70 5% 0,1W
3540	4822 051 20472	4K70 5% 0,1W
3541	4822 051 20008	0Ω JUMP. (0805)
3550	4822 051 20471	470Ω 5% 0,1W
3552	4822 117 10834	47K 1% 0,1W
3553	4822 117 10834	47K 1% 0,1W
3554	4822 051 20224	220KΩ 5% 0,1W
3555	4822 051 20224	220KΩ 5% 0,1W
3556	4822 051 20101	100Ω 5% 0,1W
3557	4822 051 20273	27KΩ 5% 0,1W
3558	4822 117 10834	47K 1% 0,1W
3559	4822 051 20223	22KΩ 5% 0,1W
3560	4822 051 20008	0Ω JUMP. (0805)
3561	4822 051 20101	100Ω 5% 0,1W
3562	4822 051 20101	100Ω 5% 0,1W
3563	4822 051 20223	22KΩ 5% 0,1W
3564	4822 051 20223	22KΩ 5% 0,1W
3564	4822 051 20472	4K70 5% 0,1W
3565	4822 051 20223	22KΩ 5% 0,1W
3567	4822 051 20102	1KΩ 5% 0,1W
3568	4822 051 20472	4K70 5% 0,1W
3569	4822 051 20472	4K70 5% 0,1W
3572	4822 051 20101	100Ω 5% 0,1W
3573	4822 051 20101	100Ω 5% 0,1W
3574	4822 051 20223	22KΩ 5% 0,1W
3575	4822 051 20223	22KΩ 5% 0,1W
3576	4822 117 10834	47K 1% 0,1W
3577	4822 051 20101	100Ω 5% 0,1W
3578	4822 051 20472	4K70 5% 0,1W
3579	4822 051 20472	4K70 5% 0,1W
3580	4822 051 20008	0Ω JUMP. (0805)
3652	4822 051 20102	1KΩ 5% 0,1W
3653	4822 117 10834	47K 1% 0,1W
3654	4822 117 10834	47K 1% 0,1W
3658	4822 116 10063	8,2R 25% 30V PTC
3659	4822 117 10834	47K 1% 0,1W
3660	4822 116 10063	8,2R 25% 30V PTC
3665	4822 051 20008	0Ω JUMP. (0805)
3718	4822 051 20008	0Ω JUMP. (0805)
3812	4822 051 20104	100KΩ 5% 0,1W
3815	4822 117 10834	47K 1% 0,1W
3817	4822 051 20228	2R20 5% 0,1W^
3818	4822 117 10834	47K 1% 0,1W
3819	4822 051 20472	4K70 5% 0,1W
3820	4822 051 20331	330Ω 5% 0,1W

3821	4822 051 20101	100Ω 5% 0,1W
3822	4822 051 20331	330Ω 5% 0,1W
3823	4822 051 20331	330Ω 5% 0,1W
3824	4822 051 20472	4K70 5% 0,1W
3825	4822 051 20101	100Ω 5% 0,1W
3829	4822 051 20472	4K70 5% 0,1W
3830	4822 117 11503	220R 1% 0.1W
3831	4822 117 11503	220R 1% 0.1W
3832	4822 051 20331	330Ω 5% 0,1W
3833	4822 117 10834	47K 1% 0,1W
3834	4822 051 20102	1KΩ 5% 0,1W
3835	4822 117 10833	10K 1% 0,1W
3836	4822 117 10834	47K 1% 0,1W
3837	4822 051 20101	100Ω 5% 0,1W
3838	4822 051 20102	1KΩ 5% 0,1W
3840	4822 051 20102	1KΩ 5% 0,1W
3841	4822 051 20102	1KΩ 5% 0,1W
3842	4822 051 20105	1M00 5% 0,1W
3851	4822 051 20008	0Ω JUMP. (0805)
3852	4822 117 10833	10K 1% 0,1W
3855	4822 117 10833	10K 1% 0,1W
3858	4822 051 20008	0Ω JUMP. (0805)
3859	4822 051 20008	0Ω JUMP. (0805)
3862	4822 051 20471	470Ω 5% 0,1W
3863	4822 051 20101	100Ω 5% 0,1W
3864	4822 051 20104	100KΩ 5% 0,1W
3865	4822 051 20101	100Ω 5% 0,1W
3866	4822 051 20101	100Ω 5% 0,1W
3872	4822 051 20101	100Ω 5% 0,1W
3874	4822 051 20008	0Ω JUMP. (0805)

5172	4822 157 10975	120UH 10%
5173	4822 157 71184	10UH 10%
5174	4822 157 71206	BLM21A601SPT
5200	4822 157 71206	BLM21A601SPT
5201	4822 242 10565	95880-211 (36.860MHZ)
5202	4822 157 71184	10UH 10%
5203	4822 157 10976	68UH 10%
5204	4822 157 71206	BLM21A601SPT
5205	4822 157 10977	4,7UH 10%
5275	4822 242 81164	AT-51(11.2896MHZ)
5276	4822 157 71206	BLM21A601SPT
5277	4822 157 71206	BLM21A601SPT
5278	4822 157 71206	BLM21A601SPT
5400	4822 157 70935	COIL ASSY 97UH 10A
5402	4822 242 10398	TJ125DHB2 (32,768KHZ)
5500	4822 157 71206	BLM21A601SPT
5550	4822 157 10976	68UH 10%
5551	4822 157 71206	BLM21A601SPT
5650	4822 242 10709	CSTCS6.00MG-TC
5651	4822 157 71206	BLM21A601SPT
5700	4822 157 11679	7A06N-100K 10U
5800	4822 209 16297	LSYAA50

6200	4822 130 10654	BAT254
6300	4822 130 83757	BAS216
6301	4822 130 83757	BAS216
6401	4822 130 10488	S3G

6402	4822 130 10655	1SR154-400
6406	4822 130 10656	UDZ20B
6407	4822 130 10655	1SR154-400
6410	4822 130 83757	BAS216
6413	4822 130 11174	LSA670-JM
6551	4822 130 10654	BAT254
6552	4822 130 10654	BAT254
6653	4822 130 10657	PTZ5.6A
6654	4822 130 10657	PTZ5.6A
6803	4822 130 10185	UDZ5.6B
6804	4822 130 10185	UDZ5.6B
6805	4822 130 10185	UDZ5.6B
6806	4822 130 10185	UDZ5.6B
6807	4822 130 10185	UDZ5.6B
6809	4822 130 10185	UDZ5.6B
6810	4822 130 10185	UDZ5.6B
6812	4822 130 11175	LST670-JK
6813	4822 130 11175	LST670-JK
6814	4822 130 10185	UDZ5.6B
6815	4822 130 10185	UDZ5.6B
6850	4822 130 83757	BAS216
6852	4822 130 10185	UDZ5.6B

7172	4822 130 60511	BC847B
7200	4822 130 60511	BC847B
7201	4822 209 15479	SAA7701H/N212
7202	4822 209 33985	TDA8579T/N1
7204	5322 209 14481	HEF4053BT
7275	4822 130 60511	BC847B
7276	4822 130 60511	BC847B
7277	4822 209 16148	SAA7367T
7278	4822 209 33985	TDA8579T/N1
7279	4822 209 33985	TDA8579T/N1
7290	5322 130 60508	BC857B
7291	5322 130 60508	BC857B
7301	4822 130 60511	BC847B
7302	4822 209 16278	TDA1561Q/N2
7303	4822 209 16278	TDA1561Q/N2
7401	4822 209 14814	L4949NP
7402	4822 209 16279	SAA1305T
7404	4822 209 14815	VN06SP
7407	4822 209 15826	L9820D
7409	4822 130 60511	BC847B
7410	4822 130 60511	BC847B
7418	4822 209 33162	MC4558IDT
7430	4822 209 16281	LF85CDT
7500	4822 209 31553	FCB61C65LL-70T
7501	4822 209 16282	P51XAG30KFBD
7503	5322 209 11102	HEF4052BT
7504	5322 209 60424	74HC573D
7505	4822 209 30426	74HC00D
7506	4822 209 91136	PC74HC259T
7507	4822 209 14819	74HC251D
7508	4822 209 16733	M27C1001-PROG
7508	4822 209 16719	M27C2001-90C6
7550	4822 209 16283	P83CE569EFB/021
7550	4822 209 16721	560EFFB-RC959 PH2
7552	5322 130 60508	BC857B

7650	4822 209 32743	MSM6307GS
7801	4822 130 60511	BC847B
7802	5322 130 63033	BCP56
7803	4822 130 60511	BC847B
7804	4822 130 60511	BC847B
7805	4822 130 60511	BC847B
7820	4822 130 60511	BC847B

Philips Car Systems

automotive
mannesmann
VDO

PHIL -05317

CD Module CDM-M2/1.1/1.1-1/1.1R/1.2/2.3

Service Manual

12 V

1. GENERAL

The CDM-M2 is a full-logic µP- and servo-controlled CD module. The module is controlled by the headset via the standardized I²C bus. The mechanical part is the same for all versions; the table gives an overview of the different connector types, supply voltages and applications.
The CDM-M2 has a so-called 'Pirouette' loading mechanism. This means that the CD is loaded and ejected with help of a roller which touches only the edge of the CD instead of the disc surface.
This guarantees an absolute scratch-free loading and ejecting of the CD.
Other built-in protections are against: 2nd disc insertion, 8cm disc insertion and mechanism damage when inserting a CD during power-off.

2. TECHNICAL DATA

Operating voltages	:	*Refer to table (section 3)*
Crosstalk suppression	:	≥ 75 dBA - A-weighted
THD	:	≥ 60 dBA - A-weighted
S/N ratio	:	≥ 85 dBA - A-weighted
Dynamic range	:	≥ 75 dBA - A-weighted
De-emphasis	:	≥ 8 dB
Bus interface	:	I²C
Weight	:	approx. 600 g

PCS 92 011

Published by VDO Car Communication Printed in The Netherlands 4822 725 25483

5317

OVERVIEW OF CDM-M2 VERSIONS

Version	Control Connector	Data Connector	Supply Voltage V1	Supply Voltage V2	Remarks
1.1	11-pole MOLEX SPOX	6-pole MOLEX PICOFLEX	4.75 - 5.25VDC 5.0VDC nom.	4.75 - 5.25VDC 5.0VDC nom.	Analogue audio output
1.1-1	10-pole MOLEX PICOFLEX	6-pole MOLEX PICOFLEX	4.75 - 5.25VDC 5.0VDC nom.	4.75 - 5.25VDC 5.0VDC nom.	Analogue audio output
1.1R	11-pole MOLEX SPOX	6-pole MOLEX PICOFLEX	4.75 - 5.25VDC 5.0VDC nom.	4.75 - 5.25VDC 5.0VDC nom.	As version 1.1 - but with new push-back
1.2	11-pole MOLEX SPOX	6-pole MOLEX PICOFLEX	4.75 - 5.25VDC 5.0VDC nom.	4.75 - 5.25VDC 5.0VDC nom.	Digital audio output
2.3	14-pole APM MICRO-MATCH	Combined with Control connector	10.0 - 16.0VDC 13.2VDC nom.	4.75 - 5.25VDC 5.0VDC nom.	Navigation system application / CD-ROM

For connector pin layouts, see further on in this manual.

4. MAINTENANCE

Remark: All position numbers of the main assy are given as normal fonts; position numbers of the pick-up assy are underlined.

4.1 Cleaning and lubrication

The CD module mechanism requires periodic cleaning and lubrication.

4.2 Cleaning with alcohol

- Turntable wheel pos. 14.
- Disc clamp assy pos. 2.
- Lens of pickup (laser) unit pos. 4.

4.3 Lubrication Overviews

See page 4.

5. CHECKS

5.1 Equipment Required

- Test CD's:
  - SBC442 4822 397 30155
  - SBC444/444A 4822 397 30245
  - Audio Signals disc1 SBC429 4822 397 30184
  - A-BEX TCD721 (white scratch)
  - Philips 8A (double black dot)
  - Max. thickness 4822 397 30275
  - Min. thickness 4822 397 30276
  - Skew disc 4822 397 30277
  - Eccentr. 200µm 4822 397 30278
  - Max. radius 4822 397 60141

The CD module should be tested while connected to a suitable radio set.

5.2 Access times

- Use the test CD SBC442.
- Maximum times should be:
  - 'Load to Play': 6 sec
  - Start up: 3 sec
  - Switch track1 → track 2: 2 sec
  - Switch track1 → track 20: 4 sec
  - Play → standby: 3 sec
  - Standby → eject: 3 sec
- If one or more times exceed the max. value, check (gear) wheels pos. 5-9 + 51, feed gear assy pos. 10/11 and drive gear pos. 13 and replace if necessary. Check also the servo- and sledge (feed) motors (resp. pos. 3 and 5).

5.3 Black dot

- Use test CD SBC444A with simulated black dot of typ. 1000µm.
- No 'hitching' may occur now during play.

5.4 Double black dot

- Use test CD Philips 8A with simulated black dots of 600+300µm.
- No 'hitching' may occur now during play.

5.5 Information layer interruption

- Use test CD SBC444A with simulated interruption of typ. 1000µm.
- No 'hitching' may occur now during play.

5.6 Simulated fingerprint

- Use test CD SBC444A with simulated fingerprint (tracks 18 and 19).
- No 'hitching' may occur now during play.

5.7 'White' scratch

- Use test CD A-BEX TCD721 with a white scratch of typ. 1000µm.
- No 'hitching' may occur now during play.

5.8 Eccentricity

- Use test CD with 200ìm eccentricity.
- No audible distortion, wow or flutter may be heard now.

5.9 Thickness

- Use the 'max.- and min. thickness' test CD's.
- The module should load these discs properly and no audible distortion, wow or flutter may be heard now.

5.10 Track attainability

- Use 'Audio signals' test CD.
- Track no.99 should be reached without problems.

When one or more specifications mentioned in '5.3' - '5.10' are not met, check the sledge (feed) assy pos. 5/6/10-13, spindle motor pos. 7 and pick-up unit pos. 4.
Replace if necessary.

For more information refer to the manual: 'General Check and Alignment Procedures' 4822 725 25456.

6. DISASSEMBLY PROCEDURE

Important: Before disassembling the CD module, lay the module with the pcb side up, unless otherwise noted.
Close the solder bridge on the flex foil of the pick-up (laser) unit assy pos. 4 of the drive assy pos. 43.
First the rear bracket pos. 11 should be removed!
For re-assembling, follow the procedures in reverse order. Take care that the wires, cams etc. are in the right position again after re-assembling.
For the exact position of the parts, refer to the exploded view.

6.1 CD pcb pos. 37

- Remove cable assy's pos. 59 and 60.
- Remove flexfoil of drive assy pos. 43 from the connector.
- Unplug the cables of the spindle- and sledge motor of pos. 43 and the servo motor pos. 3.
- Remove the two screws pos. 38.
- Pull the left part of the pcb slightly backward, lift it and take the pcb out.

6.2 Front bracket assy pos. 1

- First remove the CD pcb (see '**6.1**').
- Remove the two fixation screws pos. 23.
- Loosen the three springs pos. 17 and 48 from the pivots of the bracket.
- Pull off the damper from the pin of pos. 43.
- Take front bracket away.
- When re-assembling, put some spirit on the damper fixation pivots to make it easier to fix the damper.
- *Use new springs for pos. 17 and 48!*

6.3 Rear bracket pos. 11

- Remove the two fixation screws pos. 23.
- Loosen the two adhesive tapes and remove the servo motor cable wires.
- Pull off the two dampers from the pins of pos. 43.
- Take rear bracket away.
- When re-assembling, put some spirit on the damper fixation pivots to make it easier to fix the dampers.

6.4 Drive assy pos.43

- First remove the pcb and brackets as described in '**6.1**', '**6.2**' and '**6.3**'.
- Remove the protection rod pos. 41.
- Unhook the two springs pos. 22.
- Supply the servo motor with a DC voltage of approx. 3...5V ('+' to motor terminal marked by red dot), to have the motor run so that command slider pos. 26 moves backward; *and* push roller pos. 8 to the left *and* push guiding/lever pos. 14/15 to the right *simultaneously*.
- Alternative method:
  Remove the servo motor by removing fixation screw pos. 23 and pulling the worm pulley side upwards; thereafter turn detection lever pos. 24 anti-clock-wise so that swing wheel pos. 51 graps in the cam of pos. 26; push and hold roller pos. 8 to the left *and* the guiding/lever pos. 14/15 to the right *simultaneously* and turn pos. 8 anti-clockwise until locking left pos. 27 moves to the right.
- As soon as pos. 27 moves to the right, the drive assy can be taken out.
- When re-assembling, *use new springs for pos. 17, 22 and 48!*

***Important**: After re-assembling, **DON'T FORGET** to remove the solder bridge from the pick-up unit pos. 4!*

7. EXPLODED VIEWS

7.1 Exploded view changer mechanism

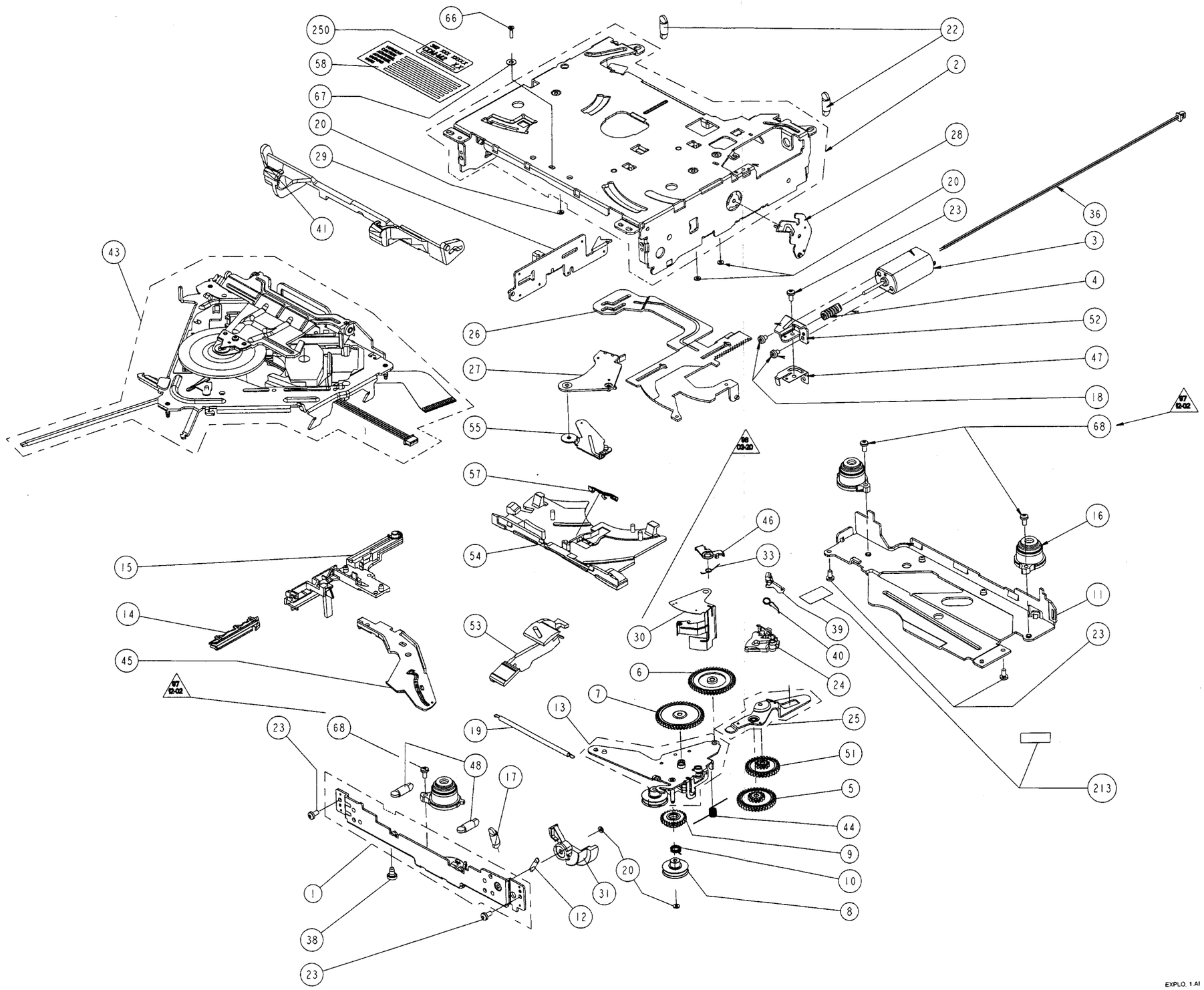

7.2 Exploded view pick-up unit

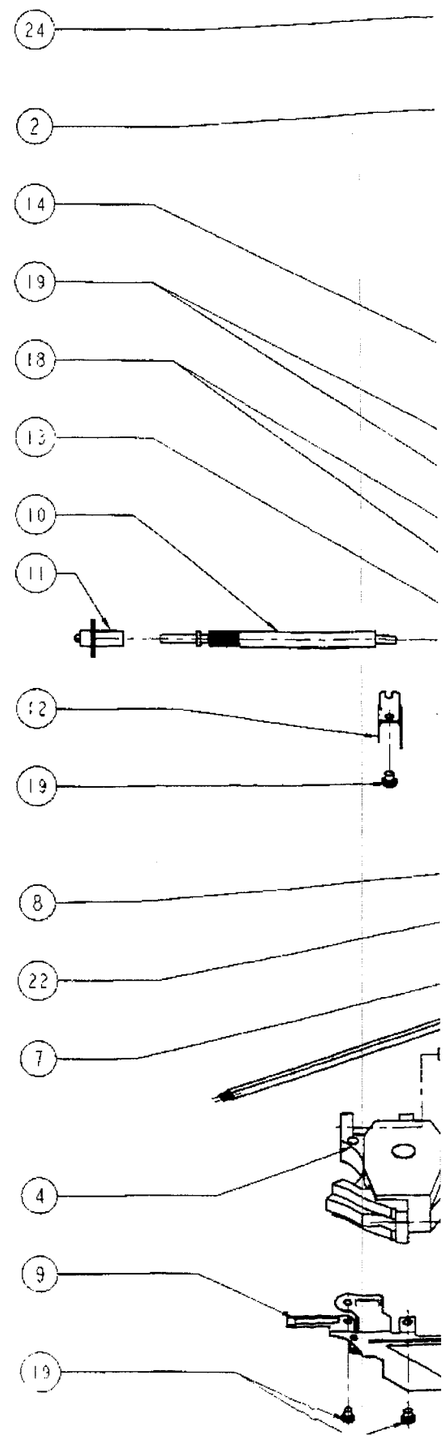

7.2 Exploded view pick-up unit

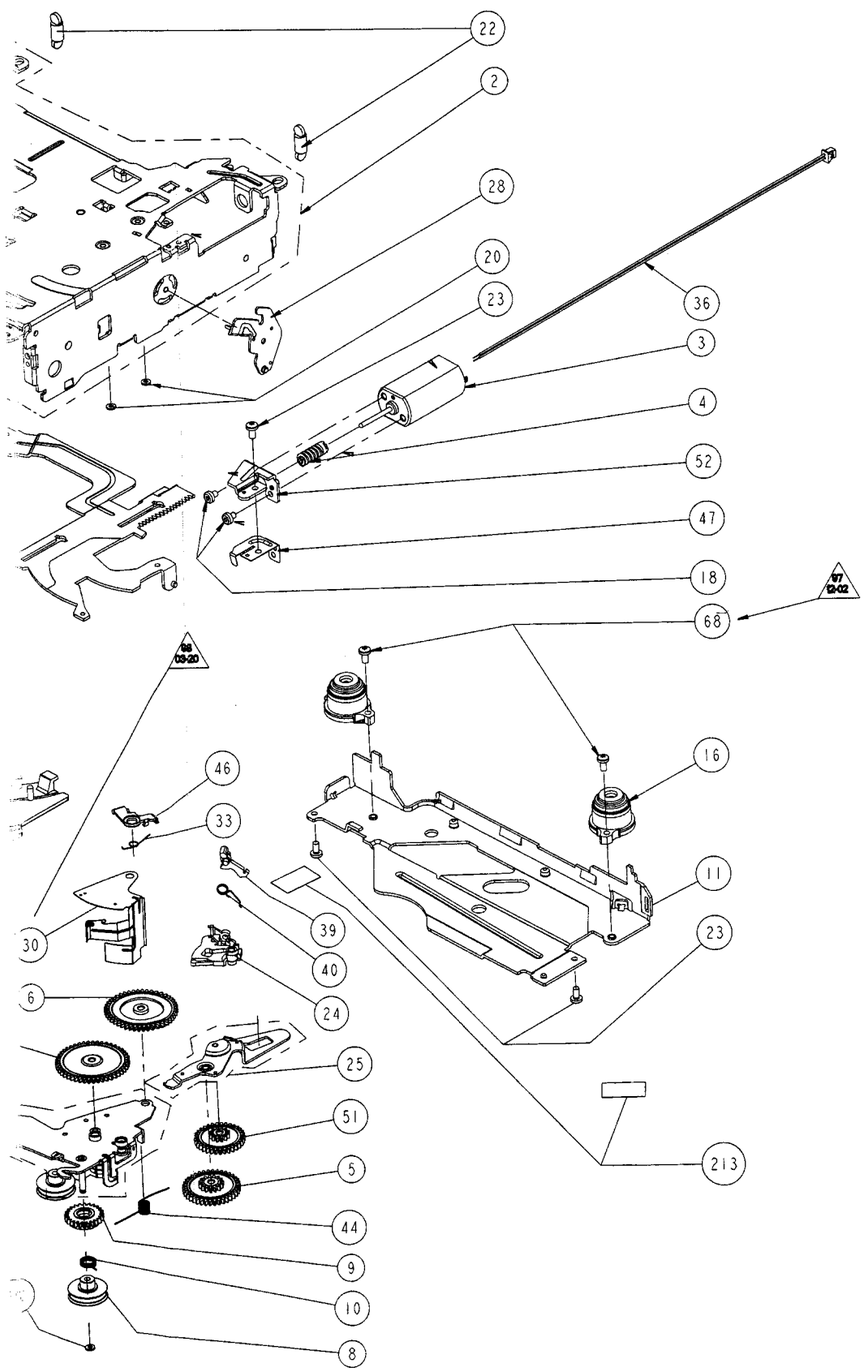

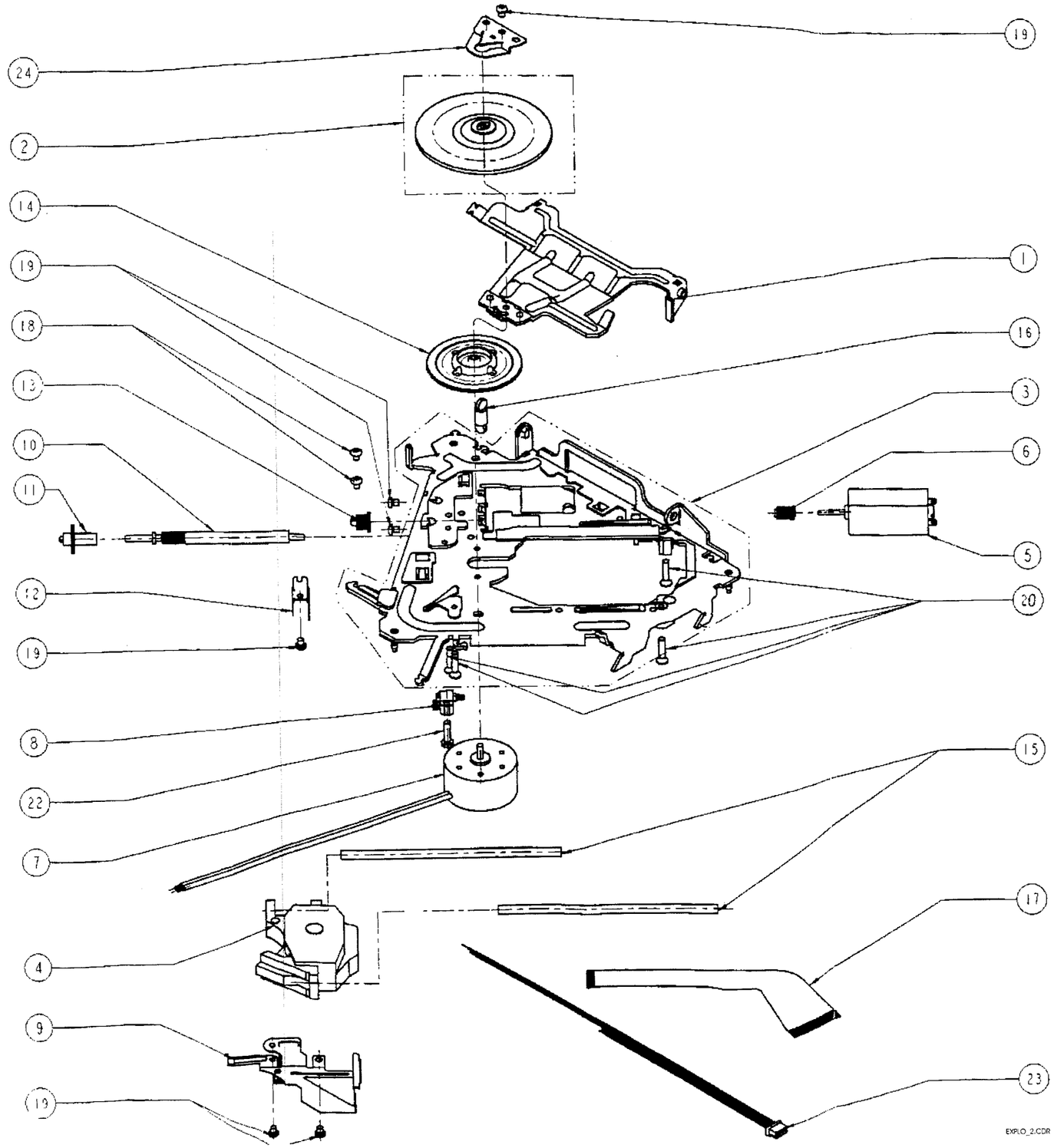

8. LUBRICATION OVERVIEWS

8.1 Lubrication overview changer mechanism

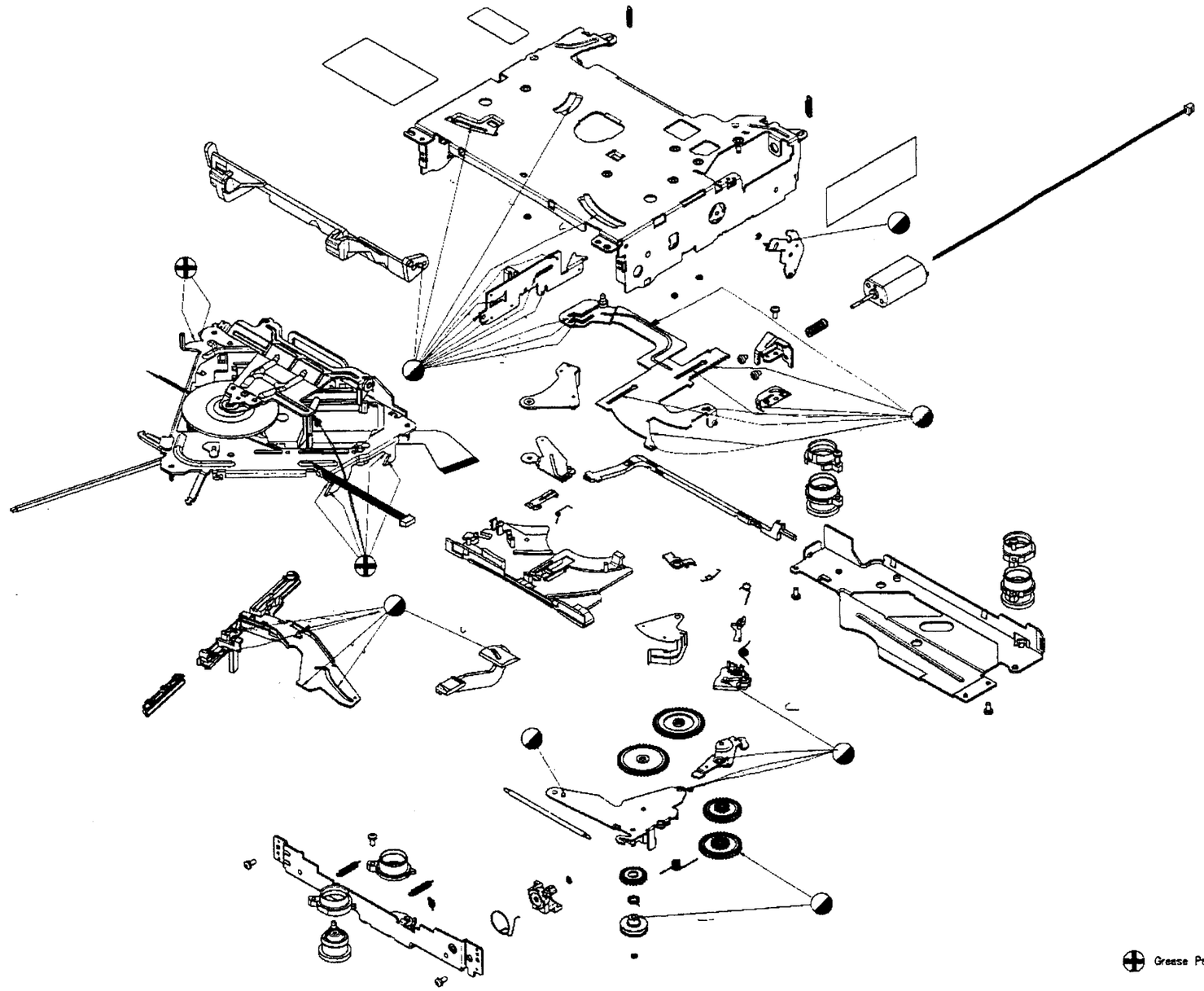

Grease Paste 805 K Gleitmo (1312 505 03108)

Grease L 30 TF (1304 523 17608)

EXPLO_3.CDR

8.1 Lubrication overview pick-up unit

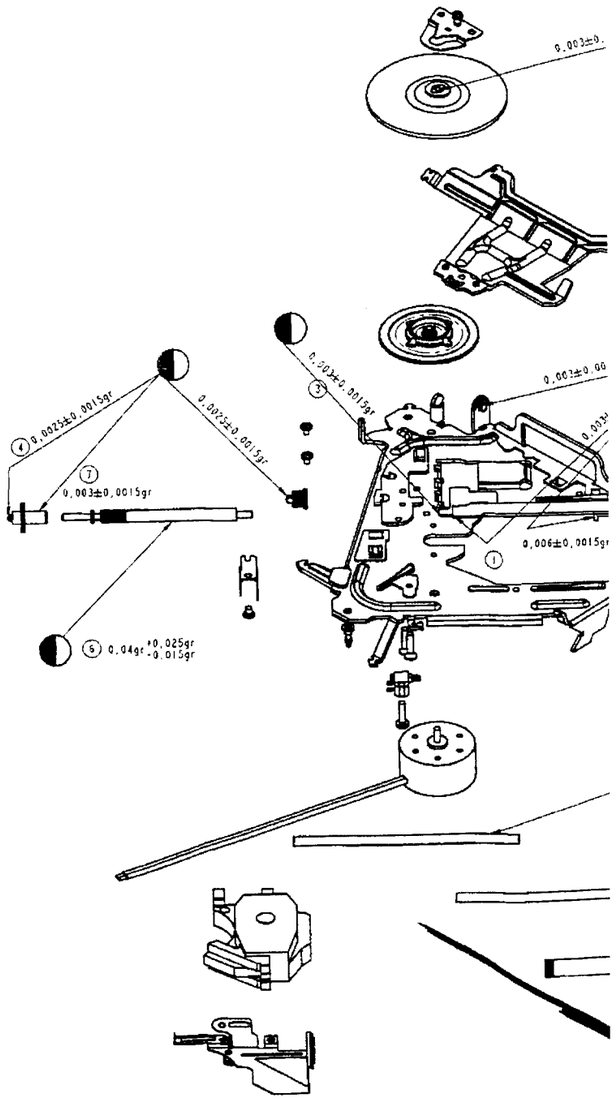

8.1 Lubrication overview pick-up unit

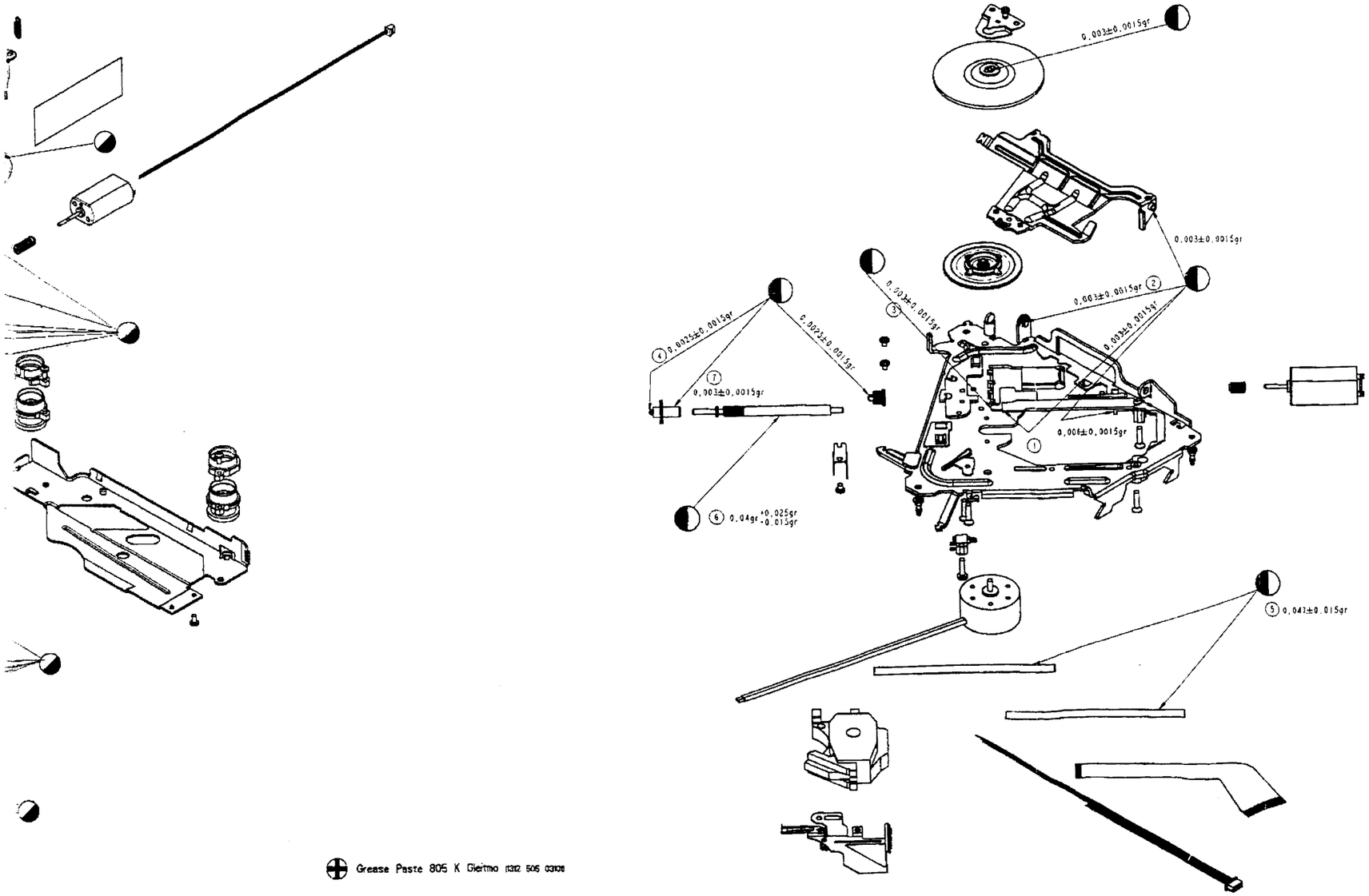

① Bearing point of the feed gear assy on the side of the sledge motor.
② The grease is put on the bearing point of the pressure plate.
③ The axle of the drive gear.
④ The grease is put on the bearing point of the feed gear assy. on the side of the sledge motor (①)
⑤ Instead of the OPU we grease the surface of the main pick shafts by using a special equipment.
⑥ We grease the surface of the feed gear. In this way the grease disperses better on the length of the feed gear.
⑦ After mounting

97 09-08 completely changed and komplett geaendert und 3rd release 3. Freitfreigabe

Molykote PG - 602 (7304 501 09801)

Grease Paste 805 K Gleitmo (7312 505 03108)

Grease L 30 TF (7304 523 17501)

EXPLO_3.CDR

EXPLO_4.CDR

PCS 92 014

9. CONNECTIONS OVERVIEW

9.1 Connections CDM-M2/1.1/1.1R

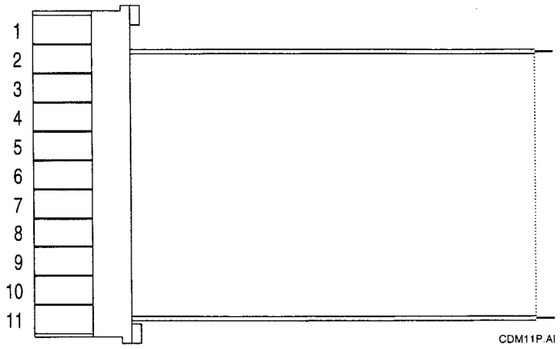

11 POLE CONNECTOR

Pin	Signal
1	N.C.
2	INSERT SWITCH
3	GROUND
4	+ 5VDC (ANAL.)
5	SERIAL CLOCK - SCL
6	SERIAL DATA - SDA
7	BUS REQUEST - CRQ
8	+ 5VDC (DIG.)
9	µP RESET - CRST
10	GROUND
11	NOT USED

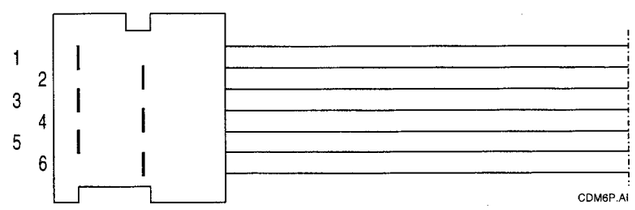

6 POLE AUDIO CONNECTOR

Pin	Signal
1	AUDIO GROUND
2	AUDIO RIGHT CHANNEL
3	AUDIO GROUND
4	AUDIO LEFT CHANNEL
5	AUDIO GROUND
6	NOT USED

9.2 Connections CDM-M2/1.1-1

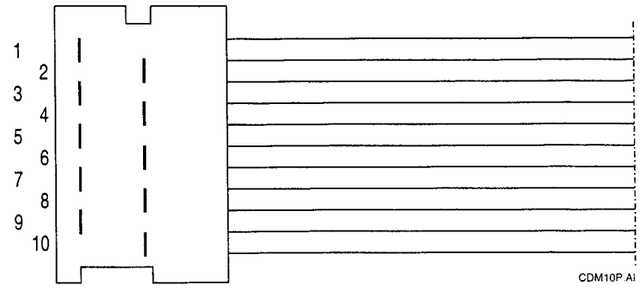

11 POLE CONNECTOR

Pin	Signal
1	INSERT SWITCH
2	GROUND
3	+ 5VDC (ANAL.)
4	SERIAL CLOCK - SCL
5	SERIAL DATA - SDA
6	BUS REQUEST - CRQ
7	+ 5VDC (DIG.)
8	µP RESET - CRST
9	NOT USED
10	NOT USED

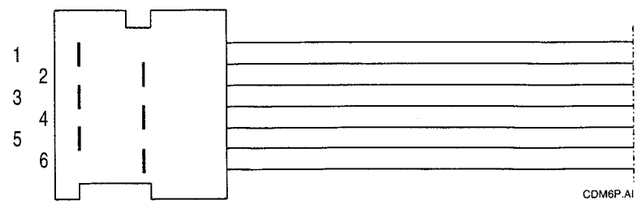

6 POLE AUDIO CONNECTOR

Pin	Signal
1	AUDIO GROUND
2	AUDIO RIGHT CHANNEL
3	AUDIO GROUND
4	AUDIO LEFT CHANNEL
5	AUDIO GROUND
6	NOT USED

9.3 Connections CDM-M2/1.2

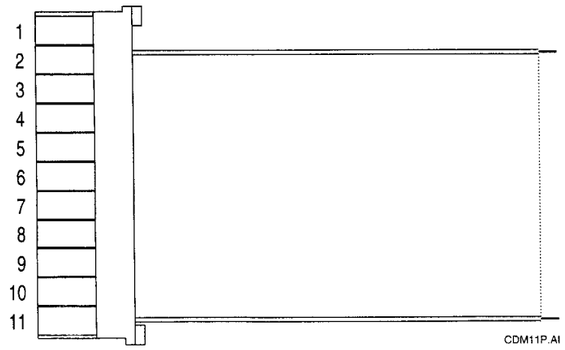

11 POLE CONNECTOR

Pin	Signal
1	N.C.
2	INSERT SWITCH
3	GROUND
4	+ 5VDC (ANAL.)
5	SERIAL CLOCK - SCL
6	SERIAL DATA - SDA
7	BUS REQUEST - CRQ
8	+ 5VDC (DIG.)
9	µP RESET - CRST
10	GROUND
11	NOT USED

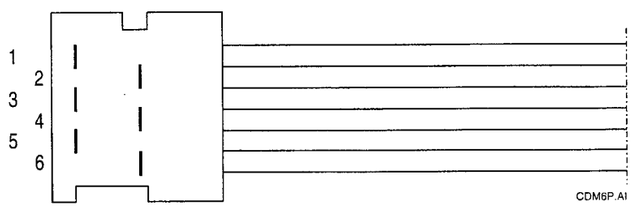

6 POLE DATA CONNECTOR

Pin	Signal
1	DIGITAL GROUND
2	SERIAL BIT CLOCK - SCLK
3	DIGITAL GROUND
4	SERIAL DATA
5	WORD CLOCK - WCLK
6	NOT USED

9.4 Connections CDM-M2/2.3

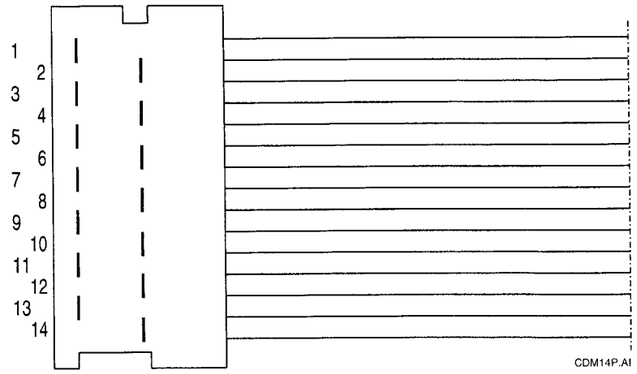

14 POLE CONNECTOR

Pin	Signal
1	INSERT SWITCH
2	GROUND
3	+ 14VDC (SWITCHED)
4	SERIAL CLOCK - SCL
5	SERIAL DATA - SDA
6	BUS REQUEST - CRQ
7	+ 5VDC (DIG.)
8	µP RESET - CRST
9	GROUND
10	SERIAL BIT CLOCK - SCLK
11	GROUND
12	SERIAL DATA
13	WORD CLOCK - WCLK
14	ERROR FLAG - EF

10. PARTS LIST

Notes: For the exploded views, refer to page 3.

The CDM-M2 is subdivided into the following main parts:
CD loader mechanism, drive (pick-up) unit, pcb and cable set.
However, the detailed exploded views both of the changer mechanism and the pick-up unit are inserted for completeness purposes and to clarify the maintenance – and disassembly procedures.

10.1 CDM-M2 mechanical parts

	4822 691 10712	Loader assy complete
23	4822 502 12001	Screw M2x4
	4822 310 11146	Spring kit for drive
38	4822 502 12795	Screw M2,5x6
43	4822 691 10715	Drive assy
	4822 691 10662	CDM-M2/1.1 complete (with pcb/packed)
	4822 691 10729	CDM-M2/1.1-1 complete (with pcb/packed)
	4822 691 10731	CDM-M2/1.1R complete (with pcb/packed)
	4822 691 10694	CDM-M2/1.2 complete (with pcb/packed)
	4822 691 10732	CDM-M2/2.3 complete (with pcb/packed)

10.2 CDM-M2 electrical parts

37	4822 214 12799	PWB assy CDM-M2/1.1/1.1
59	4822 320 12344	Cable assy CDM-M2/1.1/1.1R/1.2, 10-pole spox
60	4822 320 12345	Cable assy CDM-M2/1.1/1.1-1/1.1R/1.2, 6-pole picoflex
61	4822 214 12764	PWB assy digital CDM-M2/1.2
62	4822 214 12766	PWB assy CDM-M2/1.1R
63	4822 214 12801	PWB assy CDM-M2/2.1
65	4822 320 12347	Cable assy CDM-M2/1.1-1, 10-pole picoflex
69	4822 214 12763	PWB assy digital CDM-M2/2.3
70	4822 320 12346	Cable assy CDM-M2/2.3, 14-pole micromatch