V01157

KD-G3800R B/E/G/GE/GI

JVC

SERVICE MANUAL

CAR CD RECEIVER

KD-G3800R B/E/G/GE/GI

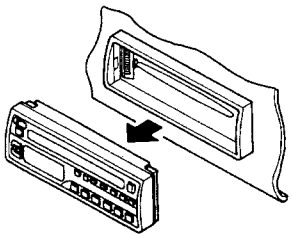

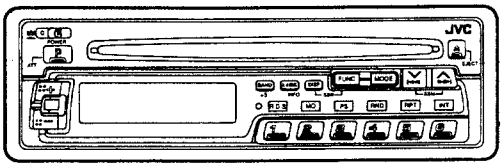

DIGIFINE

COMPACT disc DIGITAL AUDIO

RDS

Detachable

Area Suffix

B ..... U. K.
E ..... Continental Europe
G ..... Germany
GE ... Austria, Switzerland and Eastern Europe
GI ... Italy

Contents

No. 49194
September 1993

Safety Precautions

B/E/G Only
Important for Laser Products

1. CLASS 1 LASER PRODUCT
2. DANGER: Invisible laser radiation when open and interlock failed or defeated. Avoid direct exposure to beam.
3. CAUTION: Do not open the bottom cover. There are no user serviceable parts inside the unit; leave all servicing to qualified service personnel.
4. CAUTION: The compact disc player uses invisible laser radiation and is equipped with safety switches which prevent emission of radiation when unloading cartridge and the safety interlocks have failed or are defeated. It is dangerous to defeat the safety switches.
5. CAUTION: Use of controls of adjustments or performance of procedures other than those specified herein may result in hazardous radiation exposure.

ADVERSEL: Usynlig laserstråling ved åbning. når sikkerhedsafbrydere er ude af funktion. Undgå udsættelse for stråling.

VAROITUS: Varmuuskytkimen oliessa pois päältä kun laite avataan, siellä kehittyy näkymätöbtä lasersäteilä. Älä pane itseäsi säteilyn altiiksi.

VARNING: Osynlig laserståining uppstår vid komponentens öppning när säkerhetsbrytaren är frånslagen.

ADVARSEL: Usynling laserstråling ved åpning når sikkerhetsbryteren er ude af funktion Unngå utsettelse for stråling.

Position And Reproduction Of Labels

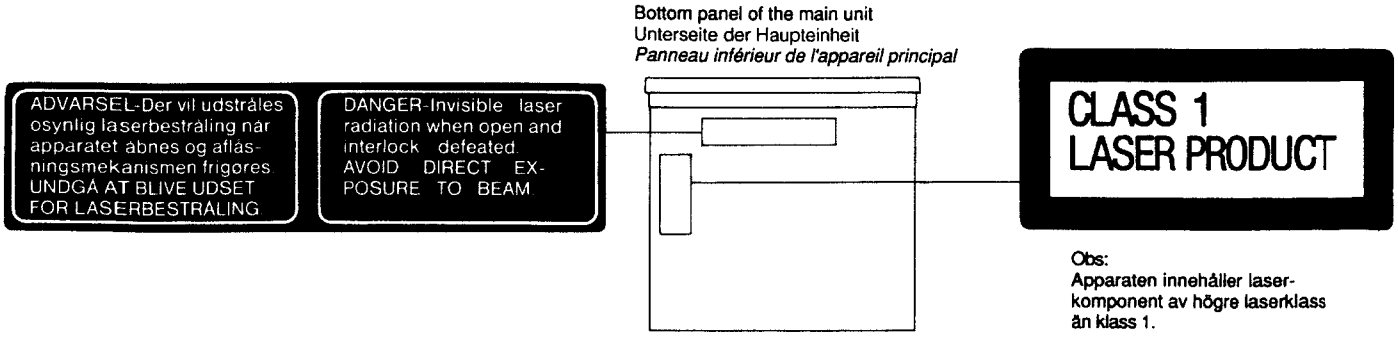

Instruction Book (Extraction)

Contents of Instructions

FEATURES

- Detachable Control Panel
- "Direct-in" disc loading system
- Direct Access Play/Skip Play/Search Play/Repeat Play/Random Play/Intro Play
- Radio Data System (RDS)
- High Sensitivity Tuner
- AM/FM Stereo PLL Synthesizer Tuner
- 24-Station Preset Tuning (FM-18, AM [MW/LW]-6)
- Preset Scan/Seek/Manual Tuning
- Strong-station Sequential Memory (SSM)
- Special-preset Station Reserve (SSR)
- 4-Channel Amplifier System
- Maximum Power Output of 22 watts per channel (Front)/22 watts per channel (Rear)
- Active Hyper-Bass Sound
- Active-illuminated Operating System (AOS)
- Digital Clock Display
- Line Output Terminal

SPECIFICATIONS

CD PLAYER SECTION
Type: Compact disc player
Signal Detection System: Non-contact optical pickup (semiconductor laser)
Number of Channels: 2 channels (stereo)
Frequency Response: 5 to 20,000 Hz
Dynamic Range: 90 dB
Signal-to-Noise Ratio: 94 dB
Wow & Flutter: Less than measurable limit

AUDIO AMPLIFIER SECTION
Maximum Power Output:
(Front) 22 W per channel
(Rear) 22 W per channel
Continuous Power Output (RMS):
(Front) 8 W per channel into 4 Ω, 40 to 20,000 Hz at no more than 0.8% total harmonic distortion. (Rear) 8 W per channel into 4 Ω, 40 to 20,000 Hz at no more than 0.8% total harmonic distortion.
Load Impedance: 4 Ω (4 to 8 Ω allowance)
Tone Control Range
Bass: ±10 dB at 100 Hz
Treble: ±10 dB at 10 kHz
Frequency Response: 40 to 20,000 Hz
Signal-to-Noise Ratio: 70 dB
Line-Out Level: 1.5 V/20 kΩ load (Full scale)
Output Impedance: 1 kΩ

RADIO SECTION
Frequency Range
FM: 87.5 to 108.0 MHz
AM: (MW) 522 to 1,620 kHz
(LW) 144 to 279 kHz
[FM Tuner]
Usable Sensitivity: 12.1 dBf (1.1 μV/75 Ω)
50 dB Quieting Sensitivity: 16.3 dBf (1.8 μV/75 Ω)
Alternate Channel Selectivity: (400 kHz): 65 dB
Frequency Response: 40 to 15,000 Hz
Stereo Separation: 30 dB
Capture Ratio: 1.5 dB
[MW Tuner]
Sensitivity: 20 μV
Selectivity: 35 dB
[LW Tuner]
Sensitivity: 50 μV

GENERAL
Power Requirement
Operating Voltage: DC 14.4 volts (11 to 16 volts allowance)
Grounding System: Negative ground
Dimensions (W x H x D)
Installation Size: 178 x 50 x 158 mm (7-1/16" x 2" x 6-1/4")
Panel Size: 190 x 58 x 17 mm (7-1/2" x 2-5/16" x 11/16")
Gross Weight: 2.2 kg (4.9 lbs)

Design and specifications subject to change without notice.

LOCATION OF CONTROLS

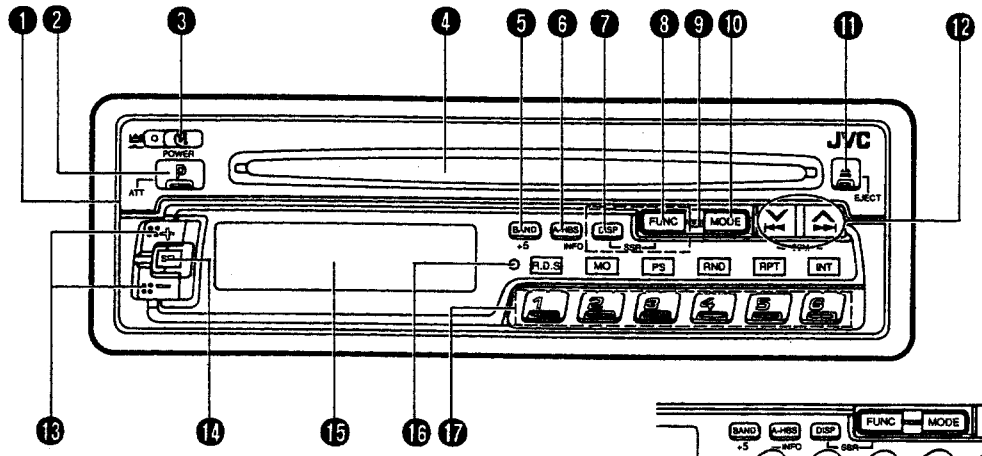

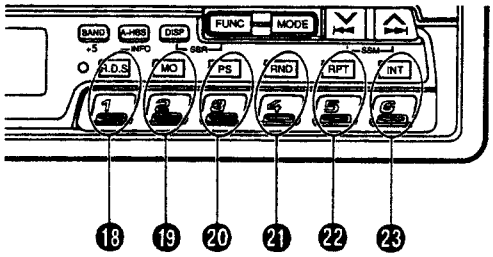

❶ Control panel
❷ POWER (P)/Attenuator (ATT) switch
POWER: Press to turn the power ON. Press for more than 1 second to turn the power OFF.
ATT: When this button is pressed during operation, the volume drops and the ATT indicator blinks. Press again to return to the original volume.
❸ Control Panel Release (⏏) switch
❹ CD loading slot
❺ BAND/+5 button
❻ Active Hyper-Bass Sound (A.HBS)/Traffic Information (INFO) button
❼ Display (DISP) button
❽ Function (FUNC) button
Used to select the source.
❾ Special-preset Station Reserve (SSR) buttons
❿ MODE button
⓫ Eject (⏏) button
⓬ Tuning/SSM/Time Adjustment/Skip (search) buttons
Down frequency/Hour adjustment (≪)/(⏮)
Up frequency/Minute adjustment (≫)/(⏭)
⓭ Level Control buttons
Use to adjust the volume, bass, treble, fader and balance. (See page 20.)
⓮ Electronic Control Mode Select (SEL) button
⓯ Display window
⓰ Microcomputer Reset button
⓱ Preset Station buttons (No.1 to No.6)
Track Number buttons (No.1 to No.6)

- Press the following buttons (⓲ to ㉓) after the MODE button has been pressed and its red indicator is lit. Five seconds after completing the operation, the MODE button's red indicator goes out.

⓲ RDS button and indicator
⓳ MONO (MO) button and indicator
⓴ Preset Scan (PS) button and indicator
㉑ Random (RND) button and indicator
㉒ Repeat (RPT) button and indicator
㉓ Intro (INT) button and indicator
㉔ Indicators (for Audio Control section)
Volume (VOL)
Bass (BAS)
Treble (TRE)
Fader (FAD)
Balance (BAL)
ATT (ON/OFF)
Level indicator
A.HBS (ON/OFF)
㉕ Indicators (for Tuner section)
Band (FM1-FM2-FM3-AM)
Radio frequency
Preset Station
MEMO
SSR (ON/OFF)
Station name display
TP (Traffic Program identification)
AF (Alternative Frequencies)
REG (Region)
STEREO (FM stereo)
MONO
SSM
T-INFO
NO TP
ALARM
㉖ Indicators (for CD player section)
LOAD
PLAY
TRK
Track number
RPT
RND
INT
EJECT
NO DISC
㉗ Indicators (for other controls)
MODE
Time
(⏲)
AOS
DEMO OFF
TUNER/CD

Audio Level Control

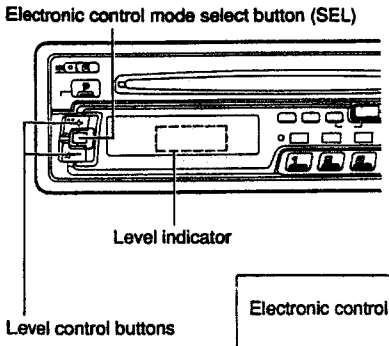

Electronic control mode			
VOL	Volume	Decreases (00 – 50)	Boosts (00 – 50)
BAS	Bass	Decreases (–07) – (00)	Boosts (00) – (+07)
TRE	Treble	Decreases (–07) – (00)	Boosts (00) – (+07)
FAD	Fader	Rear (R10 – 00)	Front (00 – F10)
BAL	Balance	Left (L10 – 00)	Right (00 – R10)

Active Hyper-Bass Sound Button

Press the A.HBS button for more than 1 second to listen to hyper-bass sound (the A.HBS button lights red).

AOS (Active-illuminated Operating System)

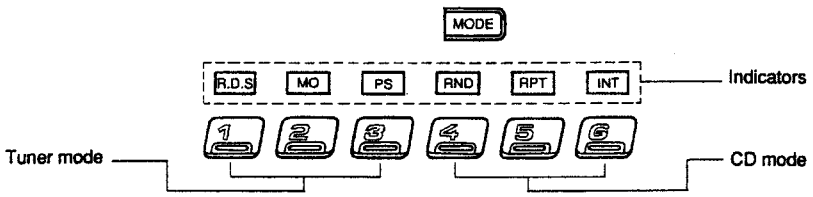

The indicators corresponding to each mode turn green in order to make operation simple. (For example, the RDS, MO and PS indicators light when Tuner mode is engaged. When the MODE button is pressed while in Tuner mode, the RDS, MO and PS indicators blink. If one of the required mode buttons is pressed while RDS, MO and PS are blinking, the corresponding operation mode is engaged.)

* Each time the power is switched ON, "AOS" is displayed.

*** AOS Demonstration mode**

In this mode, each of the AOS indicators alternately blinks.

Press the Preset Station button (2) for more than 3 seconds while pressing the FUNC button, to enter AOS Demonstration mode. When in AOS Demonstration mode, normal operation of the unit is possible, with functions being indicated in the display. (After operation is completed, AOS Demonstration mode resumes in 15 seconds.) To cancel this mode, press the Preset Station button (2) for more than 3 seconds while pressing the FUNC button.

PLAYING COMPACT DISCS

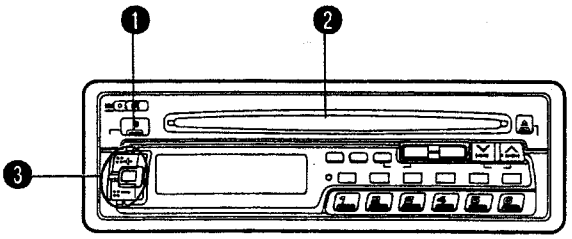

How To Play All Tracks
The following example shows a CD containing 10 tracks with a total playback time of 50 minutes, 45 seconds

Operate in the order shown.

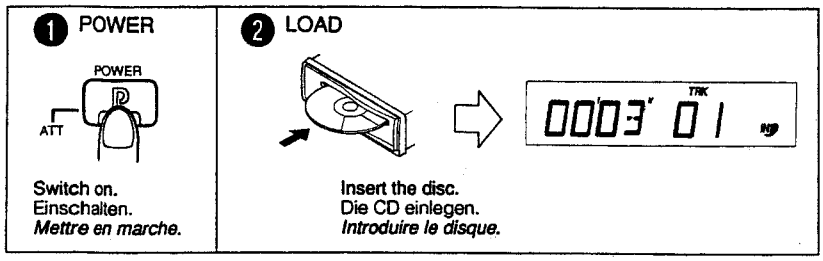

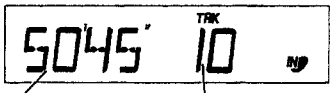

Total playback time. Total number of tracks (tunes).

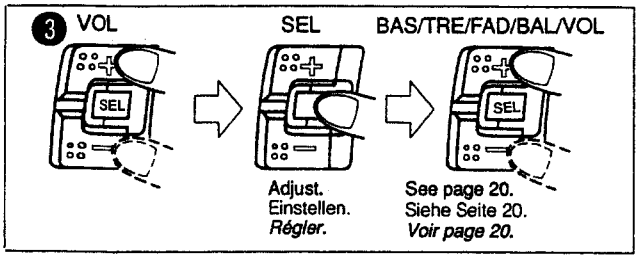

Displays elapsed playback time of each tune being played back.

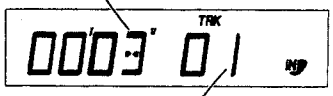

Track (tune) number.

Direct Access Playback

When the numbered button of a required track is pressed, that track is played back immediately.

- To playback tracks numbered 1 to 6, press the required Track No. button.
- To playback tracks numbered 7 to 99, press the +5* button the required number of times and then the Track No. button.

* +5 button
Each time this button is pressed, the number increases in increments of 5.

Search Playback

(How to locate a required position on the disc.)

- The required position can be located using fast-forward or reverse search during playback.
- Hold down the button to commence searching. (The search speed increases the longer the button is pressed.)
- Since a low sound level can be heard (approx. one quarter of playback), monitor the sound and release the button when the required position is located.

Skip Playback

- During playback, you can easily skip to the beginning of the previous, current, or next track, and playback will start again from there.

How to listen to the next track...
Press the (▶▶|) button once to skip to the beginning of the next track.

How to listen to the previous track...
Press the (|◀◀) button once to skip to the beginning of the current track, then again to skip to the previous track.

Random Playback

This unit's microcomputer can automatically select tracks on a disc in random order. While playing a CD, first press the MODE button and when its red indicator lights, press the RND button to start random play. To cancel this function, repeat the same procedure.

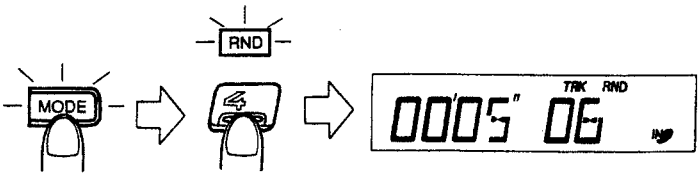

Repeat Playback

When the RPT button is pressed after the MODE button has been pressed and its red indicator is lit, the current track is repeated. By repeating the above procedure, the ⊂ indicator goes out and all-tracks playback is resumed.

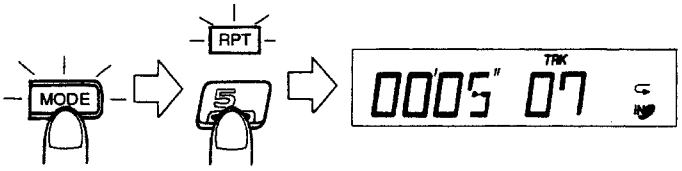

Intro Scan

When the INT button is pressed after the MODE button has been pressed and its red indicator is lit, the first 10 seconds of each track are played sequentially. When you want to start playback, press the INT button again.

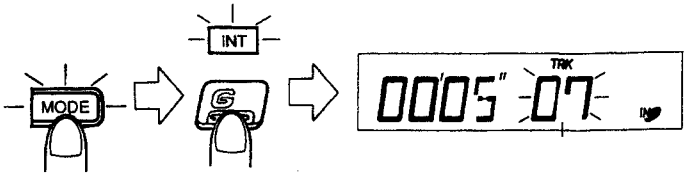

RADIO OPERATION

Operate in the order shown.

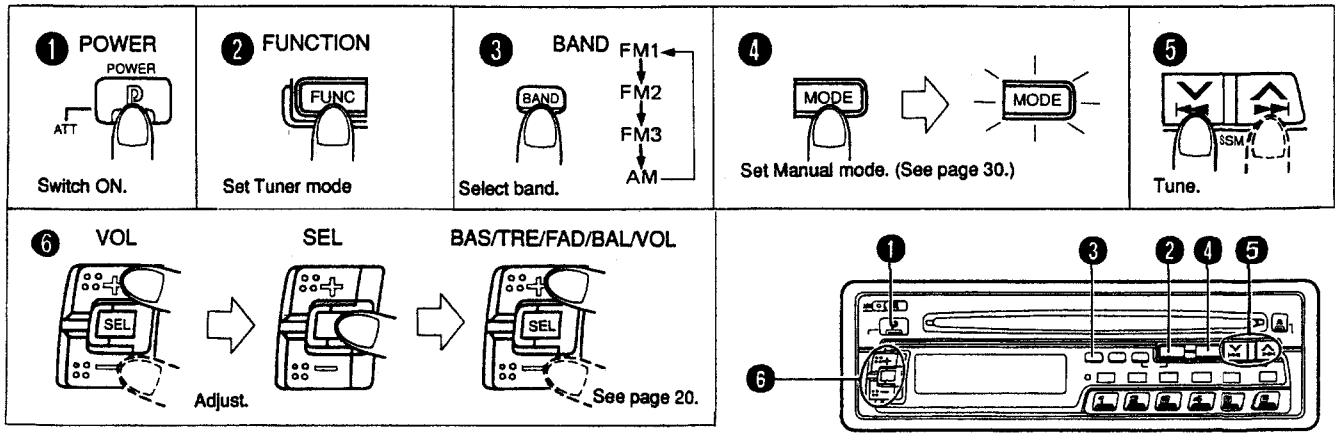

Manual Tuning

Set Manual mode using the MODE button. When the MODE button's red indicator is lit, the unit is in Manual mode. Then, by pressing the Tuning button, you can move up/down the frequency band. The band is scanned as long as either side of the button is pressed.

Frequency scan steps are as follows:
FM — in 50 kHz units
MW/LW — in 9 kHz units.

In AM operation, the frequency continuously moves from the MW (522 to 1,620 kHz) to LW (144 to 279 kHz) band and vice versa.

- When approx. 5 seconds have elapsed after completing manual tuning, the unit switches back to Seek mode and the MODE button's red indicator goes out.

Seek Tuning

The unit is in Seek mode when the MODE button's red indicator goes out. Then, by pressing the ⋀ or ⋁ button the unit tunes to the adjacent station with a higher or lower frequency. In AM operation, the frequency continuously moves from the MW to LW band and vice versa.

Preset Button Tuning

How to Preset Stations
6 stations in each band (FM1, FM2, FM3 and AM [MW/LW]) can be preset as follows:
- Example (when presetting Preset Station button "5" to an FM station at 103.5 MHz)

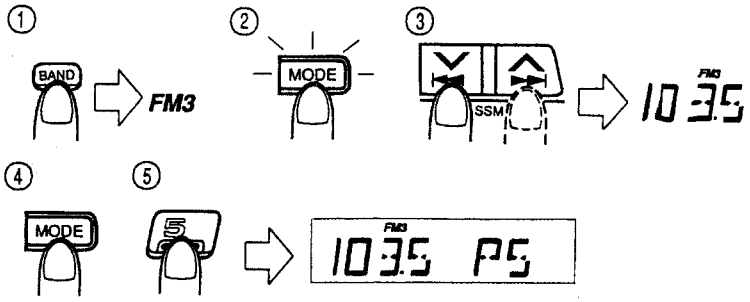

① Select the FM3 band using the BAND button.
② Set Manual mode.
③ Tune to the desired station.
④ Press the MODE button to release Manual mode.
⑤ Press Preset Station button "5" for more than 2 seconds. (When "MEMO" is displayed and "P5" blinks in the Preset Station display, the station is preset.)
- Repeat the above procedure for the other 5 Preset Station buttons and other bands (FM1 , FM2 and AM).

Notes:
- A previously preset station is erased when a new station is stored in memory.

- The preset stations are erased when the power supply to the memory circuit is interrupted during battery replacement, etc. When this occurs, preset the stations again.

Preset Tuning

① Select the band.
② Press the required Preset Station buttons (No.1 to No.6).

Preset Scan Button Tuning

This function makes it possible to automatically scan preset FM and AM (MW/LW) stations.

① Press the MODE button (its red indicator lights).
② Press the PS button.
- Scanning is performed in the order of the preset stations in each frequency band (FM1, FM2, FM3 and AM [MW/LW]). Each preset station is heard for approx. 5 seconds.

③ When the required station is heard, press the PS button again.

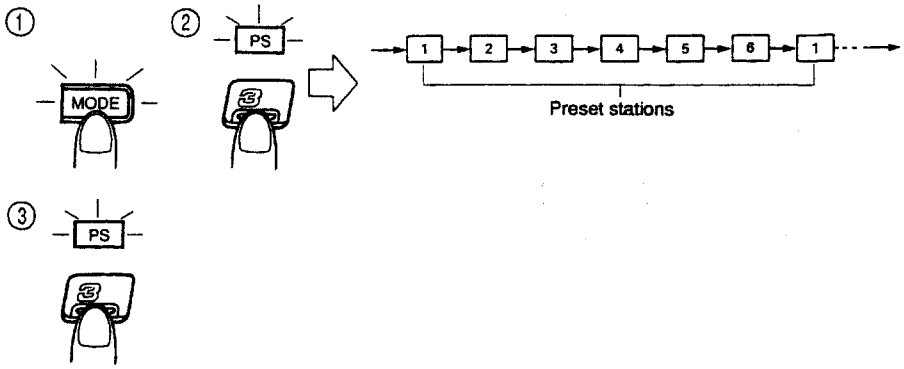

Strong-Station Sequential Memory (SSM)

This function searches for FM and AM (MW/LW) stations broadcasting strong signals. The 6 strongest stations are held in memory in the order of increasing frequency, and can be recalled with the Preset Station buttons (No.1 to No.6).

(Procedure)
① When the MODE button's red indicator goes out, press the SSM buttons (⋁,⋀) for more than 3 seconds.
② The strongest signals in the band you are listening to (FM1, FM2, FM3 and AM [MW/LW]) will be searched and selected automatically. These 6 stations are preset in the Preset Station buttons (No.1 to No.6), in the order of increasing frequency. (During this operation, "SSM" lights in the display.) The receiver then automatically tunes to the broadcast stored in Preset Station button "1".

Note:
Previously preset stations are canceled automatically when SSM is used.

RDS (Radio Data System)

RDS is a broadcasting system in which digital data is multiplexed together with normal FM radio signals. In this way, RDS offers a wide variety of new functions including AF (Alternative Frequencies — automatic tuning) and TA (Traffic Announcement identification), plus other CT, EON, PI, PS and TP codes:
- CT (Clock Time)
- EON (Enhanced Other Networks)
- PI (Program Identification)
- PS (Program Service name)
- TP (Traffic Program identification)

RDS operation
- Traffic programs and announcements can be automatically received using the TP/TA codes.
- Network Tracking reception uses the PI and AF codes. The PI code identifies the country, area and station for automatic tuning, while AF "knows" what stations are broadcasting the same program and automatically tunes to the strongest signal for optimum frequency response.
- The PS code allows station names to be displayed.

Note:
RDS operates when in FM mode only.

Station name display
The station name is displayed automatically when an RDS station is received.

RDS button
To select Network-Tracking mode, press the RDS button after the MODE button has been pressed and its red indicator is lit.
- **Mode 1 (AF: on/REG: on):**
  Network-Tracking is activated and Regional mode is engaged (switches between stations broadcasting the same program, at all times).
- **Mode 2 (AF: on/REG: off):**
  Network-Tracking is activated.
  Switches between stations belonging to the network being received.
  Note:
  When set to Mode 2 (REG off), the station network may only be received at certain times.
- **Mode 3 (AF: off):**
  Network-Tracking deactivated.

Network-Tracking reception
When driving in an area where the signal strength drops, the tuner automatically uses PI and AF codes to retune to the same program with a stronger signal from another RDS station in the network. By utilizing these codes, you can continue to listen to the same program in its finest condition, no matter where you drive. (See illustration.)

- When the RDS station to which you are tuned does not provide AF data or the unit is unable to receive AF data for any reason, Network-Tracking reception will NOT operate even when the signal strength drops below the reference level.

The same program can be received on different frequencies.

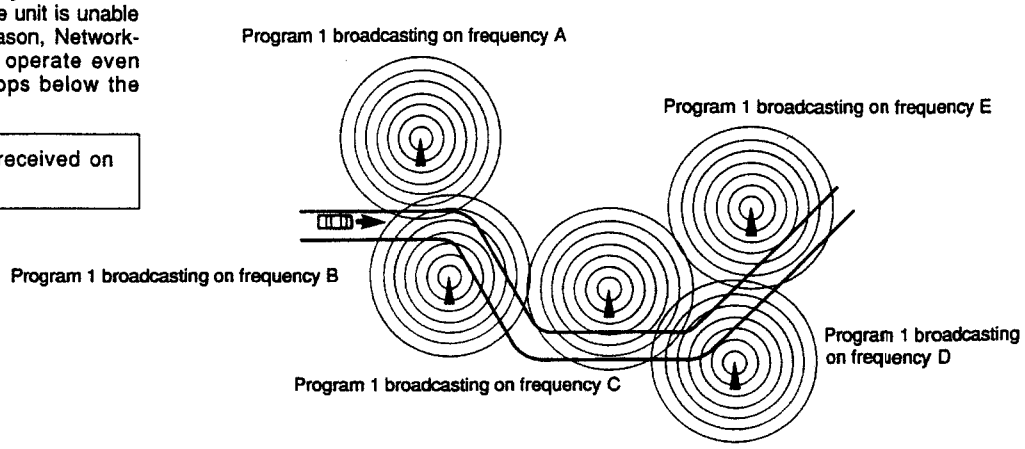

EON (Enhanced Other Networks)

EON automatically stores the frequencies of stations from other networks transmitting information codes (TP/TA/AF/PTY/PS etc.) so they can be mutually used. The following points have been improved:

When listening to a station NOT transmitting traffic information for example, EON automatically tunes to a station in a local network when this information is broadcast and then switches back to the original program when the broadcast ends.

The transmitted information (AF and other codes) is constantly and automatically updated so that preset program information can be heard immediately even if in a different network area.

Automatic reception of traffic information

1. Press the INFO button (the TP indicator blinks). Seek tuning will now stop only at stations broadcasting traffic information TP signals. When traffic information is received, the TP indicator lights.
2. When listening to a CD, it will be interrupted automatically by the traffic information, as long as TP is set. After the traffic information ends, the unit switches back to CD playback.

Traffic Information Volume Control

This function adjusts the volume of traffic information broadcasts.

1. Press the INFO button while pressing the SEL button; "INFO" will be displayed.
2. While "INFO" is displayed, set to the required volume using the Volume Level Control buttons.
3. Press the SEL button to preset the volume level.

Note:

When the INFO button is set to ON, an alarm sound can be heard if the tuner is not receiving a station broadcasting traffic information. In this case, perform seek tuning or set the INFO button to OFF.

Preset Station buttons

When a Preset Station button is pressed, if the station with that frequency is broadcasting a sufficiently strong signal, the receiver will tune to that frequency.

When the signal strength is not sufficient for good reception, by referring to the AF list, the receiver searches for a station broadcasting the same program with a stronger signal. If a station cannot be found in the AF list, PI-seek tuning starts. If a station broadcasting the same PI code cannot be detected in one search-cycle, PI-seek tuning is released and the original preset frequency is tuned to.

CT (Clock Time)

When CT data is received in the RDS signal, the time is correctly renewed.

- RDS updates the local time according to Greenwich mean time.

Note:

It takes at least 2 minutes to renew the time after receiving CT data. The station must be received for more than 2 minutes continuously, otherwise the time will NOT be renewed.

Mono Button

When listening to FM, set the MO button to STEREO or MONO after the MODE button has been pressed and its red indicator is lit.

Note:

Set to MONO when a stereo FM broadcast is too noisy and cannot be heard satisfactorily.

FM Pulse Noise Suppressor

This unit has built-in circuitry to effectively eliminate engine noise picked up by the antenna, etc. in the form of FM pulses, for a more favorable FM reception.

DIGITAL CLOCK DISPLAY

Display Button

- Press the DISP button for more than 1 second during Operation mode to continuously display the Time mode, and vice versa.

This button is used to select the Operation (TUNER or CD) and Time modes. Each time the button is pressed, the Operation mode changes as follows; Time → Operation mode (Station name*, → Frequency being received or CD) → Time.
The display returns to the initially preset mode after a few seconds.

* When the RDS signal is weak or when not tuned to an RDS station, the Station name is NOT displayed.

How To Adjust The Time
While pressing the DISP button, press the Hour Adjustment button (⋁) to adjust the "hours", and press the Minute Adjustment button (⋀) to adjust the "minutes".

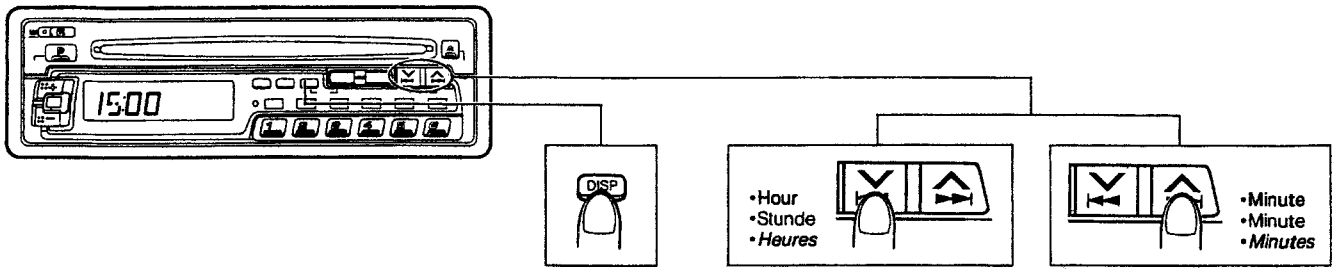

SSR (Special-preset Station Reserve)

The SSR (Special-preset Station Reserve) automatically tunes to any FM or AM preset program once a day, at a programmed time from any of the operating modes; tuner or CD. This function guarantees that you will not miss important information such as weather reports or traffic information, etc.

- Set the current time before using SSR. (See page 41.)
- The station must be preset before using SSR. (See page 31.)

(Procedure)
① While pressing the FUNC button, press the DISP button for more than 2 seconds to preset the program. ("◷" indicator blinks.)
- Perform the next operation while the "◷" indicator blinks.)

② Select the required band (i.e. FM3 in the example) using the BAND button.
③ Select the required station (i.e. 5) which has been preset using the Preset Station button.
④ Set the required time (i.e. 15:00) using the Time Adjustment buttons.
⑤ Set SSR to ON using the DISP button.
⑥ Press the DISP button for more than 2 seconds while pressing the FUNC button, to preset SSR. (Presetting is completed when the SSR ON indicator blinks and the "◷" indicator lights.)

- If the "◷" indicator stops blinking during presetting, perform the operation again from procedure ①.
- While pressing the FUNC button, press the DISP button once to check the preset program.
- In order to switch SSR mode OFF after SSR presetting, operate procedures ①, ⑤ and ⑥, however set SSR to OFF in step ⑤. (When the "◷" indicator has gone out, SSR mode is canceled.)

Example: When setting the FM station which has been preset to Preset Station button (5) of the FM3 band to 15:00.

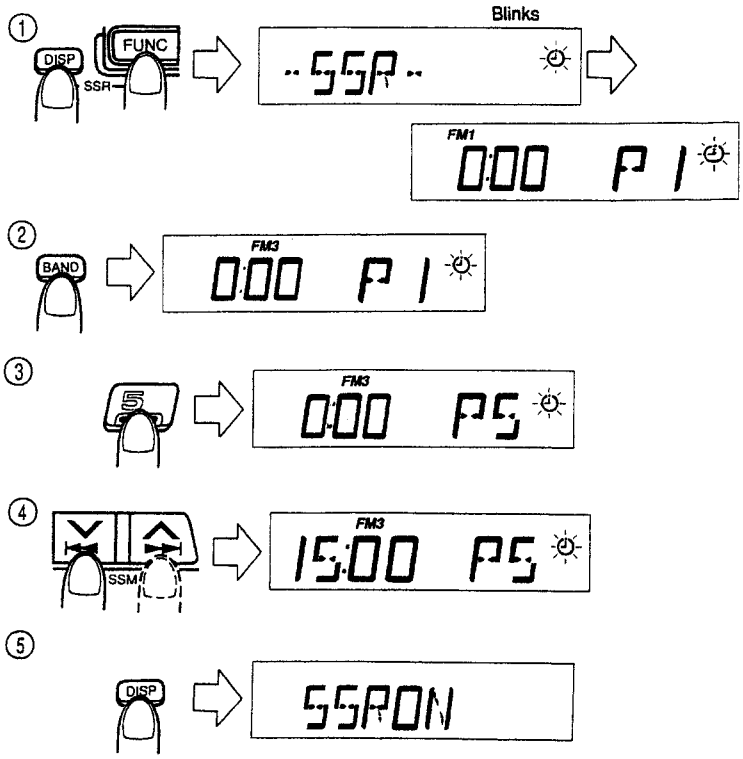

Notes:

- Once SSR has been set, the start time and broadcast station are stored in the microprocessor. When changing the start time and/or broadcast station, perform procedures ① to ⑥ again.
- After setting SSR, if the preset station is changed, the renewed station data is stored as the program station of SSR.

INSTALLATION (IN-DASH MOUNTING)

- Before installation, disengage the transportation holders by removing the screw Ⓐ.

- The following illustration shows a typical installation. However, you should make adjustments corresponding to your specific car. If you have any questions or require information regarding installation kits, consult your JVC "IN-CAR ENTERTAINMENT" dealer.

- Follow the numbers for mounting.

① Attach the trim plate.
② Attach the 2 side springs.
③ Install the sleeve in the dashboard.
* After the sleeve is correctly installed in the dashboard, bend the appropriate tabs to hold the sleeve firmly in place, as shown.
④ Fix the mounting bolt to the rear of the unit's body and place the rubber cushion over the end of the bolt.
⑤ Slide the unit into the sleeve until they are locked together.

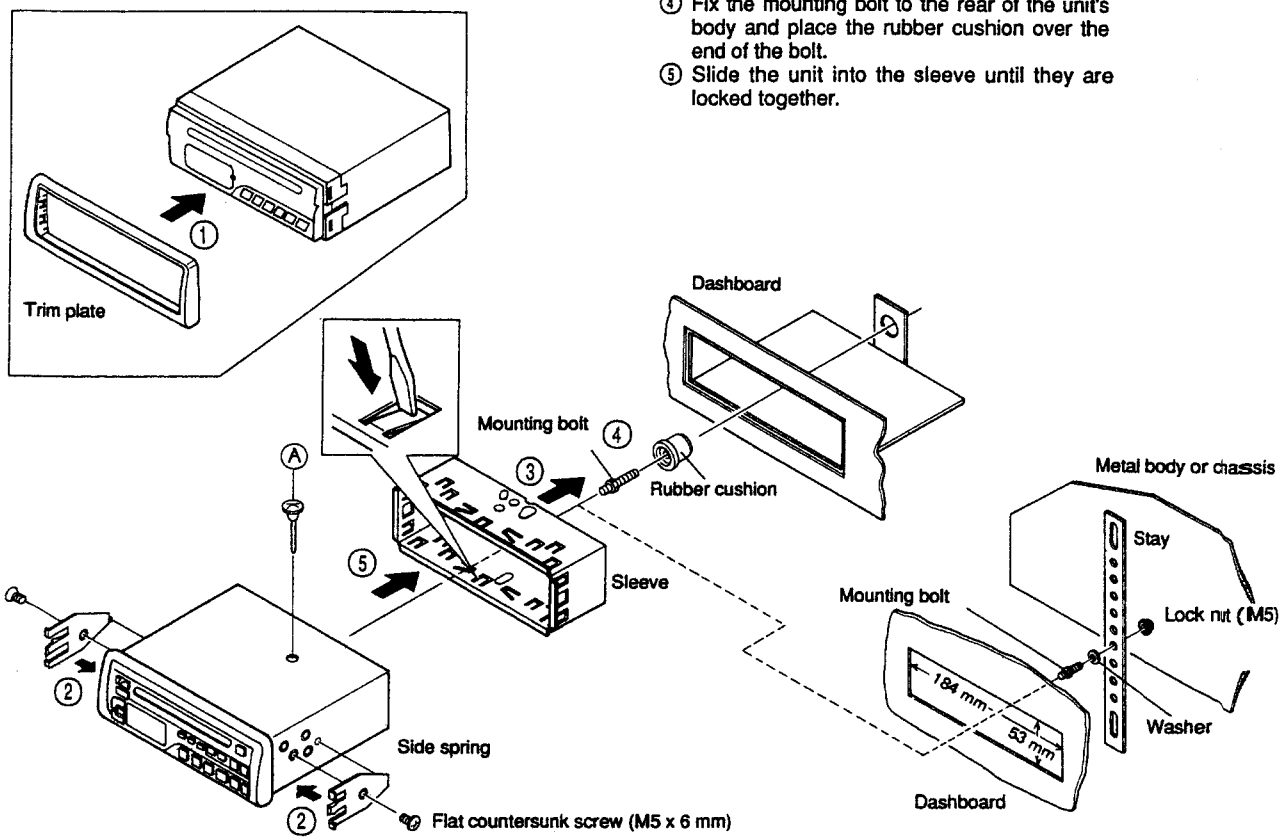

Removing the unit

- Before removing the unit, release the rear section.

① Remove the control panel by sliding the release switch (⏏) to the left.
② Insert the 2 handles between the side springs and the sleeve, as shown. Then, while gently pulling the handles away from each other, slide out the unit.

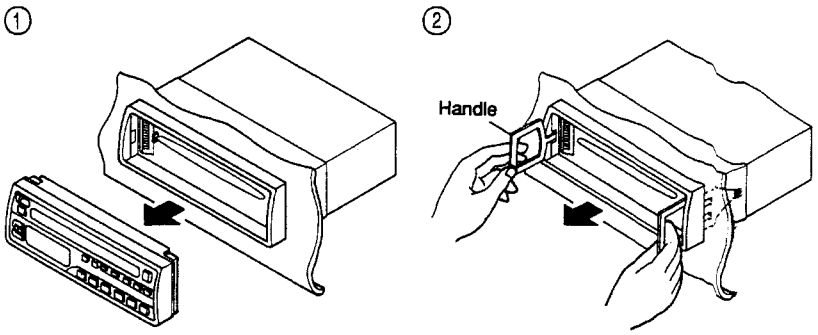

Installing With Other Equipment

When installing this unit with other equipment, make sure it is positioned under them so its temperature does not rise.

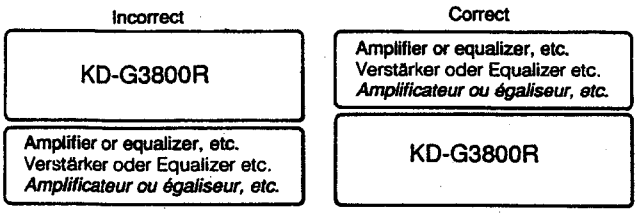

Notes:
1. When installing the unit on the mounting bracket, be sure to use the 6 mm-long screws. If longer screws are used, they could damage the unit.
2. This unit should be installed horizontally. If not possible, install it at an inclination of 20° or less with respect to the front panel.

ELECTRICAL CONNECTIONS

To prevent short circuits, we recommend that you disconnect the battery's negative terminal and make all electrical connections before installing the unit. If you are not sure how to install this unit correctly, have it installed by a qualified technician.

Note:
This unit is designed for a 12-volt DC negative ground. If your vehicle does not have this system, a voltage inverter is required, which can be purchased at JVC "IN-CAR ENTERTAINMENT" dealers.
- Maximum input of the speakers should be more than 22 watts at the rear and 22 watts at the front, with an impedance of 4 to 8 ohms.

CAUTIONS:
As this unit uses BTL (Balanced Transformerless) amplifier circuitry (floating ground system), please comply with the following:
1. Do NOT connect the black-lined speaker leads to a common point.
2. Do NOT connect the speaker leads to the metal body or chassis.
3. Cover the terminals of the leads that are NOT used with insulating tape, to prevent them from shorting.

- Be sure to ground this unit to the car's chassis.

A. 4-Speaker Connections

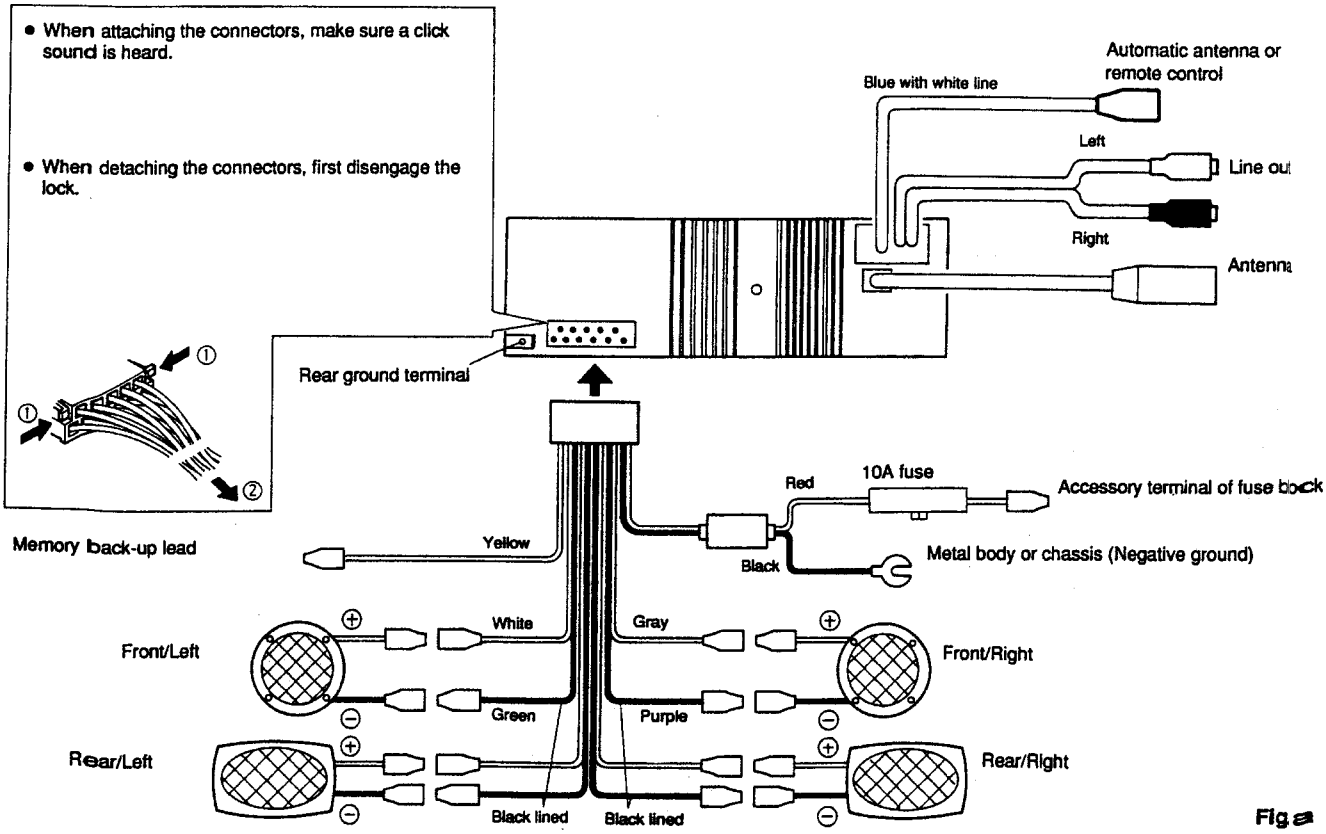

Fig.a

B. Line Terminal Connections (Line Out)

Since this unit has line-out terminals, an amplifier and other equipment can be used to upgrade your car stereo system.

- With an amplifier, connect this unit's line-out terminals to the amplifier's line-in terminals.

C. Power Aerial (Automatic Antenna) Connections

This unit can perform automatic extension/retraction of a power aerial when the power is turned ON/OFF. The remote lead connection (blue with white lines) from the audio unit is via a separate relay to the aerial motor unit.

D. Memory Back-Up Lead

Connect this lead to a LIVE power source (supplied even when vehicle ignition is OFF).

E. Fader Control

- **When used in a 4-speaker system**
  Use this control to balance the volume levels of the front and rear speakers. Set Fader mode using the SEL button and press the + Level Control button to decrease the volume level of the rear speakers, and – to decrease that of the front speakers. The overall volume level can be adjusted in Volume mode. (See page 20.)
- **When used in a 2-speaker system**
  Set this control to the center position ("00" is displayed).

How To Detach The Control Panel

① Slide the Control Panel Release (⏏) switch in the direction of the arrow to detach the control panel.
② Pull the control panel out of the main unit, as shown below.
- Put the control panel in the provided case for protection.

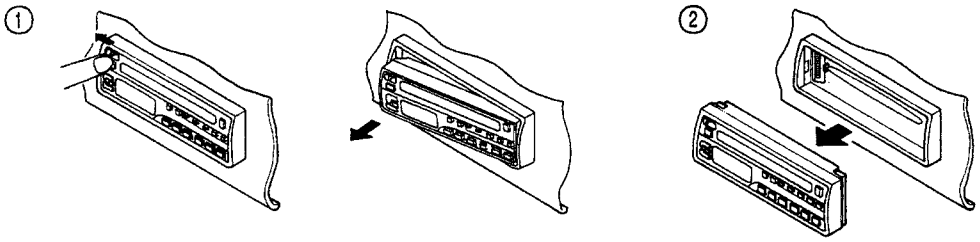

How To Attach The Control Panel

① Align the right side of the control panel with the right side of the holder.
② Press the right side of the control panel first, then the left side to set it correctly.

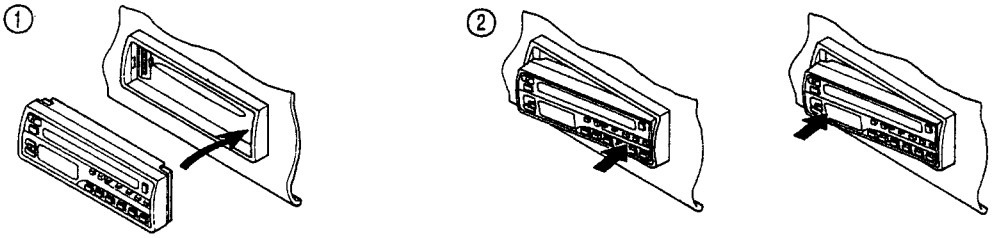

1 Location of Main Parts

■ Top View

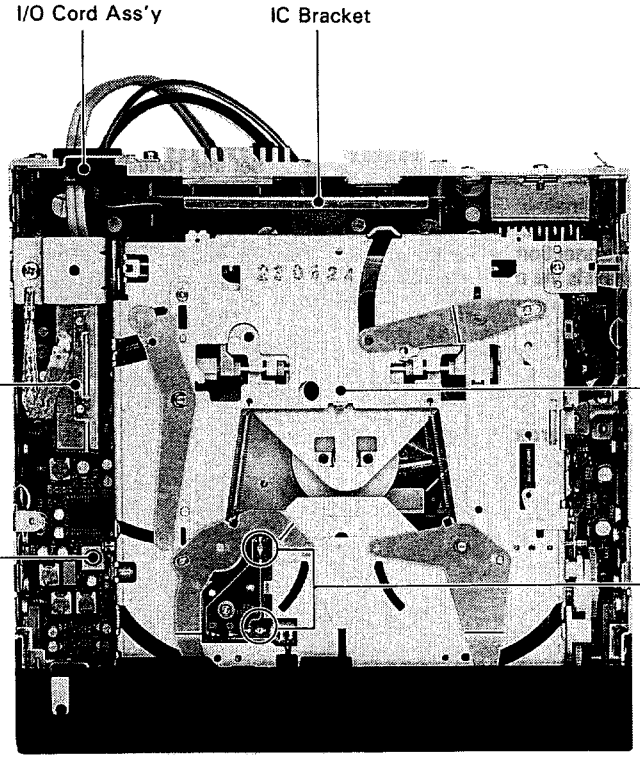

Fig. 1-1

■ Control Panel Unit

Fig. 1-2

■ Mechanism (Bottom View)

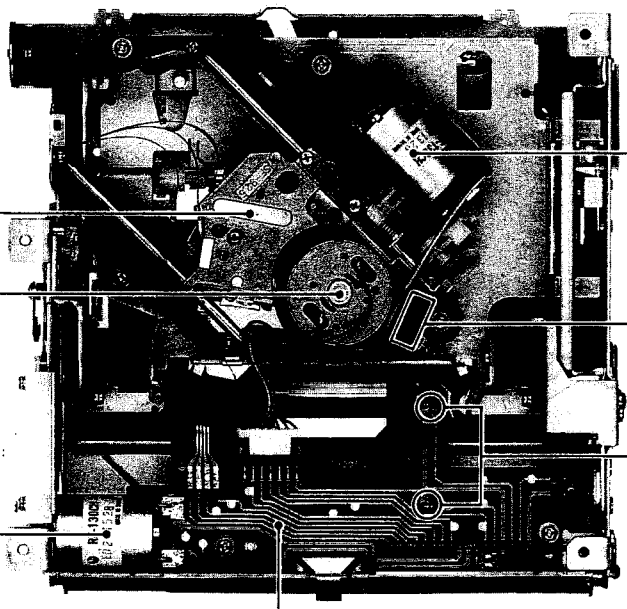

Fig. 1-3

2 Removal of Main Parts

■ Enclosure section

◆ Top Cover (See Fig.2 – 1)

1. Remove the two screws ① retaining the top cover from the rear side.
2. Insert a screwdriver between ⓐ, ⓐ' and ⓑ, ⓑ', and lock the cover by turning the screwdriver.

◆ Front Panel ass'y (See Fig.2 – 1, Fig.2 – 2)

1. Remove the four screws ⓔ, ⓔ' on both sides of the front panel, and pull out the front panel straight to the front side (in order not to bend the key and main ass'y connector section).
2. Remove the release switch knob by sliding to the left side.

◆ Mechanism Ass'y (See Fig.2 – 3, Fig.2 – 4, Fig.2 – 5)

1. Remove one screw ② retaining the bottom cover.
2. Remove the four clowsslocking the bottom cover by inserting the screw driver between ⓒ ⓒ and ⓓ ⓓ and turning the driver (In this case to insert the screw driver not to the main P.C.board ass'y inside the cover but only to the cover section.
3. Dismount the pickup flexible connector (CN501)(in this case, pull out the flexible connector by pushing pu the connector lock from the hole on the right side surface).
4. Pull out the connector on the front surface side of the mechanism.
5. Turn over the set and remove the four screw ③ retaining the mechanism ass'y.

#After clamping the mechanism ass'y, attach the flexible cord with tweezers.

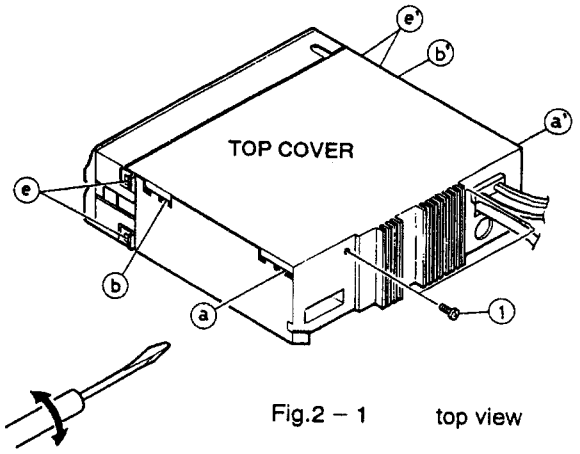

Fig.2 – 1 top view

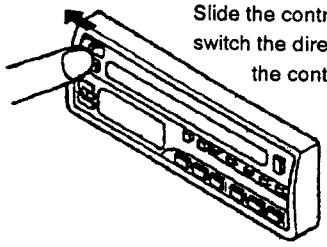

Fig.2 – 2

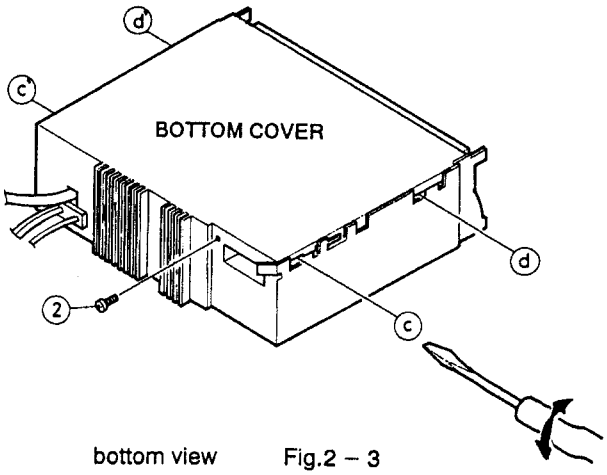

bottom view Fig.2 – 3

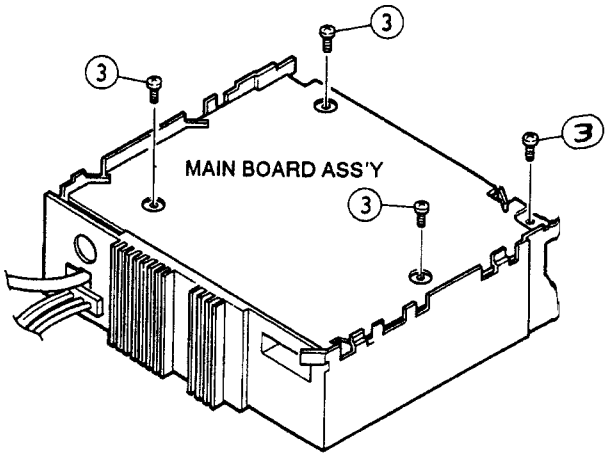

Fig.2 – 4 bottom view

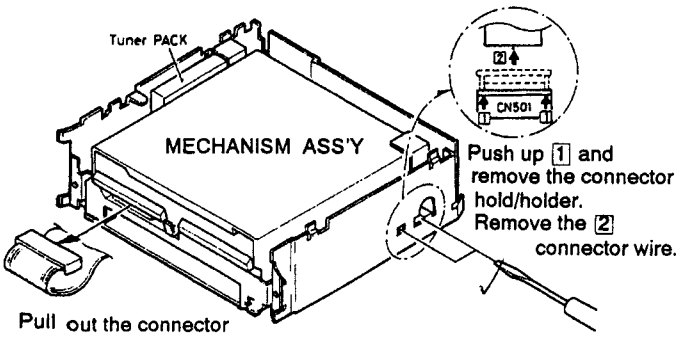

Fig.2 – 5 top view

◆ **Tuner pack ass'y** (See Fig.2 – 6)

1. Remove the upper cover/bottom cover.
2. Dismount the mechanism ass'y
3. Remove the one screw ⑤ retaing the mechanism bracket.
4. Remove the soldering from the back side of the main P.C.board ass'y.

◆ **Front bracket** (See Fig. 2 – 6)

1. Remove the two screws ④ reyaining the front bracket.

◆ **Replacement of Power IC** (See Fig.2 – 7, Fig2 – 8)

1. Dismount the upper cover/bottom cover.
2. Dismount the mechanism ass'y(to make the work easy).
3. Remove the three screws ⑧ retaining the IC bracket from the rear side.
4. Remove the soldering of IC bracket from the P.C.board.
5. Remove the soldering of IC.

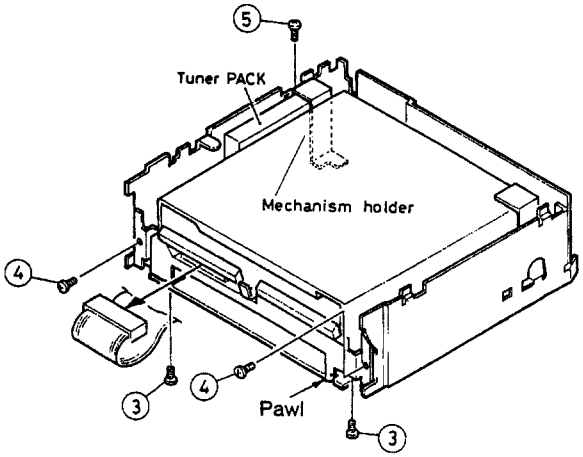

Fig.2 – 6 top view

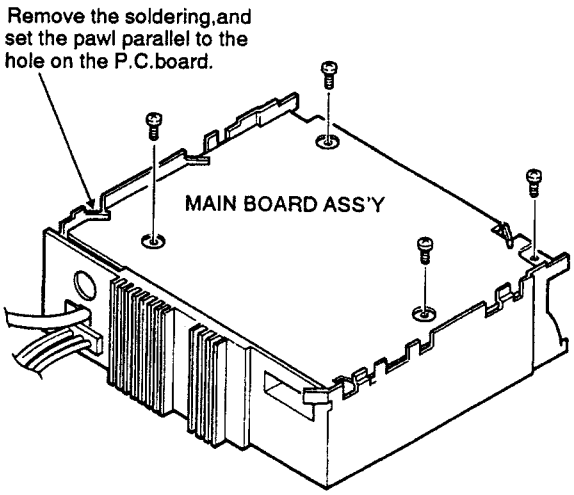

Fig.2 – 7 bottom view

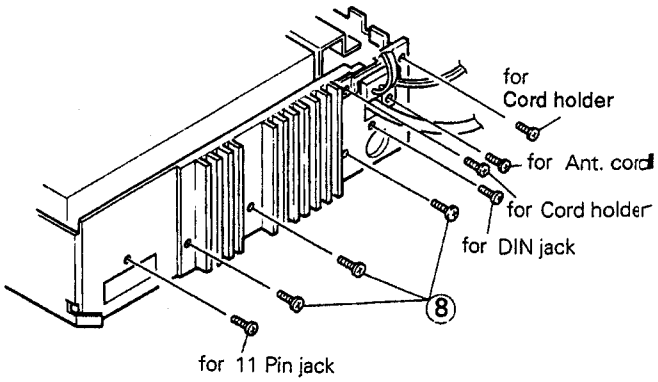

Fig.2 – 8

■ Mechanism section

◆ **Pickup Replacement/Changing Method**(See Fig.2 – 9)

1. Remove the flexible soldering ⓐ to the pickup from the connector P.C. board.
2. Remove the flexible treatment clip ⓑ with tweezers or other flat device.
3. Loosen the two screws ① and ② retaining/fixing the pickup shaft.
4. Pull out the shaft in the arrow direction. then, the pickup can be dismounted.
5. Remove the two screws ③ retaining the rack ass'y.

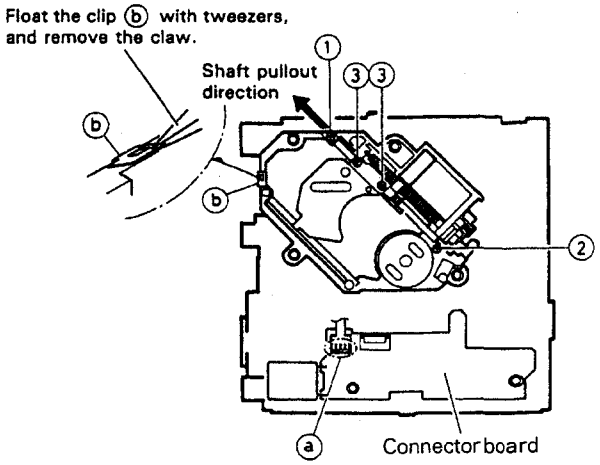

Fig. 2–9

◆ **CD Mechanism Dismounting Method**(See Fig.2 – 9, Fig2 – 10)

1. Dismount the CD mechanism unit.
2. Remove the flexible soldering ⓐ between the connector P.C. board and pickup, and the connector c for motor and sensor.
3. Dismount the four screws ④ retaining the CD mechanism(black plastics).

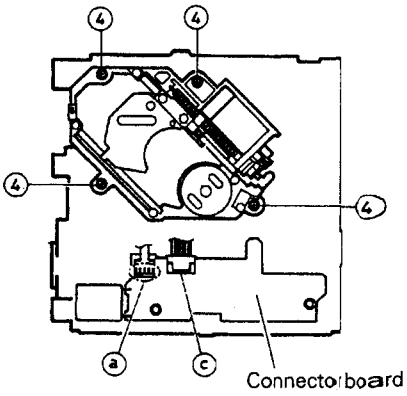

Fig. 2–10

◆ **Change/Replacement of spindle motor**(SeeFig. 2 – 11)

1. Dismount the CD mechanism unit.
2. Dismount the CD mechanism(Separate the CD mechanism from the unit).
3. Dismount the turntable using a jig.
   In case the press-in force is insufficient, replace it with a new one.
   (there will be no problem in the case of roughly two or three times of retraction).
4. Remove the three screws ⑤ retaining the motor.

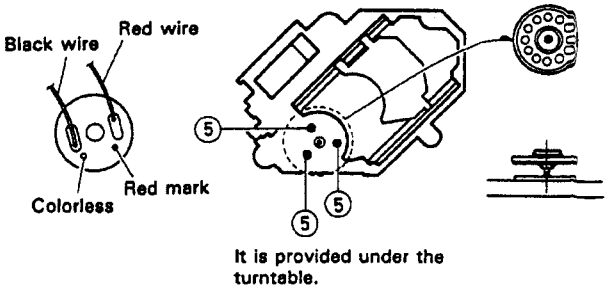

Fig. 2–11

◆ **Feed Motor Ass'y**(See Fig.2 – 12)

1. Dismount the CD mechanism unit.
2. Dismount the CD mechanism ass'y(black plastics).
3. Remove the two screws ⑥ retaining the feed motor (This motor should be assembled according to the wire treatment diagram).

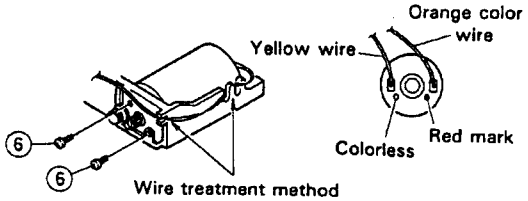

Fig. 2 – 12

◆ **Loading motor ass'y**(See Fig.2 – 13)

1. Dismount the CD mechanism unit.
2. Remove the soldering ⓓ between the connector P.C.board and loarding motor P.C.board ass'y
3. Remove the two screws ⑦ retaining the connector P.C.board, and raise the P.C.board
4. Remove the two screws ⑧ retaining the loading motor.

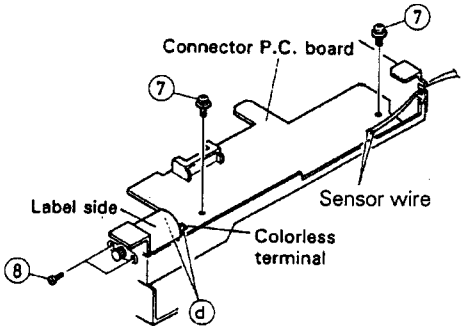

Fig. 2 – 13

◆ **Dismounting Method of CD Mechanism Mounting Chassis Ass'y (including CD check arm ass'y)**(See Fig.2 – 14, Fig.2 – 15)

*In the case of dismounting the chassis ass'y together with the damper.

1. Perform manual loading action.(by tuning the gear)under the condition wherein the CD mechanism has been dismounted, and dismount the chassis ass'y when the clamper has been lowered to the bottom.
2. Remove the two lifter springs ⓕ and ⓖ (In this case, the spring ⓕ should be removed so carefully that it dose not drop into the internal part).
3. Remove the one screw ⑧ retaining the damper.
4. Turn over the set and remove the two damper springs ⓗ and ⓘ on the damper side.
5. Remove the one screws ⑨ retaing the damper.
6. Remove the two screws ⑩ retaining the damper bracket.
7. Dismount the unit so carefully that any stress is not applied to the dampoer.

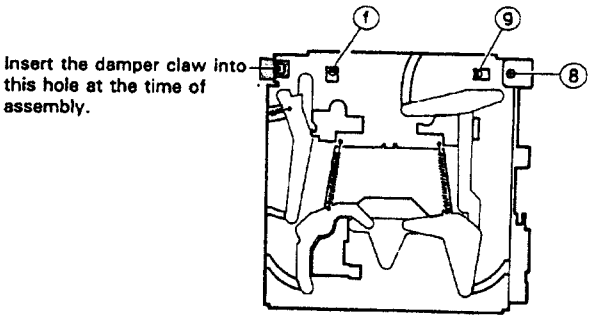

Fig. 2 – 14

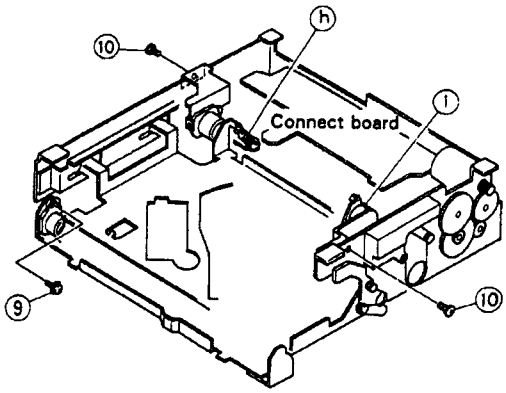

Fig. 2 – 15

◆ **Stop Lever Ass'y**(See Fig.2 – 16)

1. Dismount the connector P.C.board(according to the steps in Items 1.~3. for the loading motor ass'y)
2. Remove the two screws ⑪ retaining the reinforcing bracket.

◆ **Up lever Ass'y**(See Fig.2 – 17, Fig2 – 18)

1. perform the steps described in the items for the loading arm ass'y below.
2. Preform the steps described in the items foer the CD mechanism mounting chassis ass'y(with chuck ass'y).
3. Perform the items of the stop lever ass'y.
4. Remove the up springs from both side.
5. Thurn the loading gear so that it comes into contact with the loading roller.
6. Remove the two screws ⑫ and ⑬ retaining the up lever.
7. Dismount the up lever ass'y from the chassis surface on the left side.

◆ **Loading Roller Ass'y A**(See Fig.2 – 19, Fig.2 – 20, Fig.2 – 21)

1. Dismount the up lever ass'y.
2. Remove the E-washer ⑭ retaing the loading roller ass'y A(The white plastic parts will be pulled out from inside).
3. Remove the loading gear C and E-washer ⑮. Then,the loading gear C and set gear ass'y will be dismounted / separated. More over, the compression spring will also be remove from the shaft.
4. Pull out the loading gear(press-in)(Then, the collar white plastics) and loading roller ass'y will be removed).

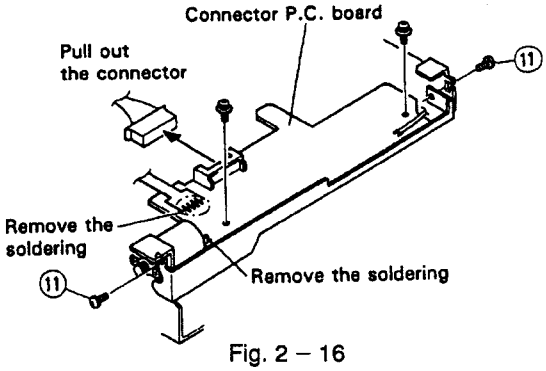

Fig. 2 – 16

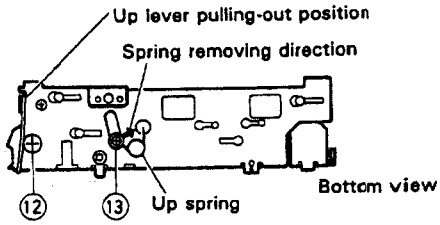

Fig. 2 – 17

Assembly diagram

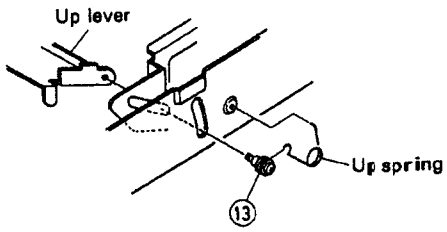

Fig. 2 – 18

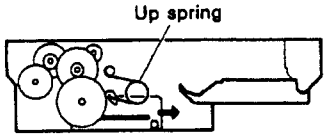

Fig. 2 – 19

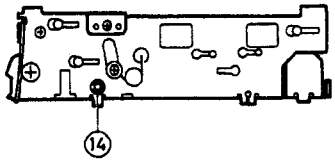

Fig. 2 – 20

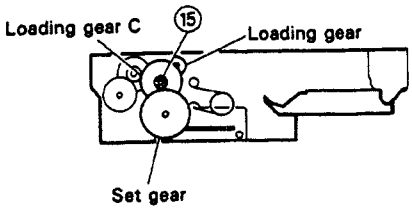

Fig. 2 – 21

■ Description of Loading Action

1. Insert a CD halfway. Then, the inserted CD will be sensed by the photo sensor, and the loading motor run.

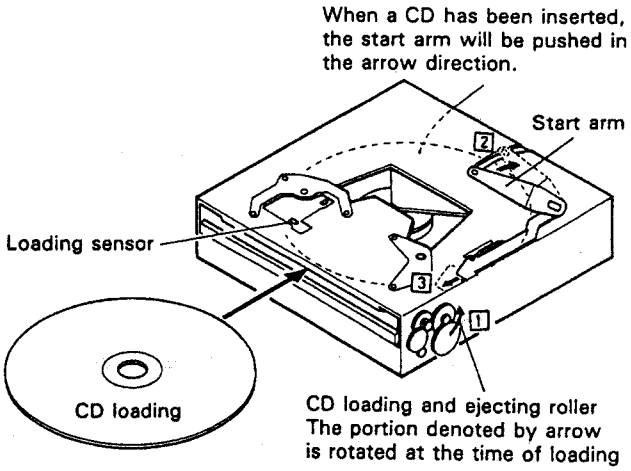

Fig. 2 – 22

2. When the Loading motor is running , the loading roller will start rotaing to load the CD. the level 3 will be pushed by the start arm being removed by CD in the arrow direction , and the set gear be engaged with the rack gear.

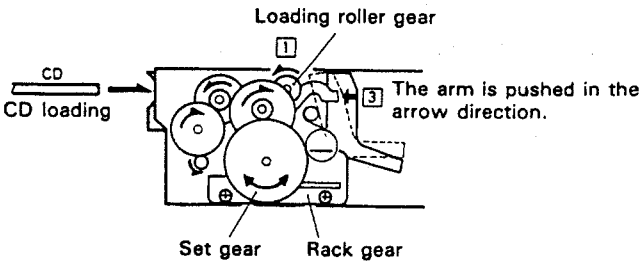

Fig. 2 – 23

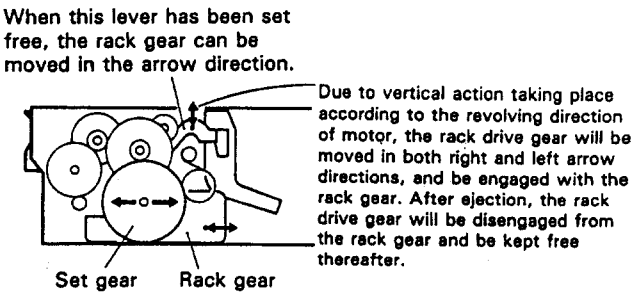

Fig. 2 – 24

3. The set gear will be rotated in the arrow direction, and the rack gear be moved to the front side. When the slide lever is moved interlock with the rack gear, the up lever ass'y stud will start moving in the arrow direction. At the same time, the clamper will go down in interlock.

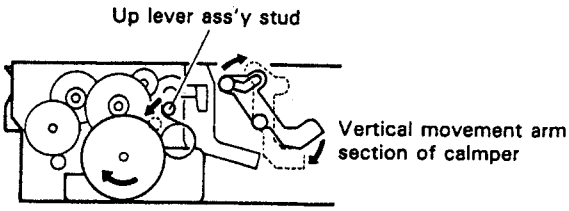

Fig. 2 – 25

3 Adjustments Procedure

Radio section

- **Equipment required**
  - AM standard signal generator
  - FM standard signal generator
  - Stereo modulator
  - Oscilloscope
  - E. V. meter (Electric voltmeter)
  - Digital tester

- **Preset frequency**

Band \ Preset	1	2	3	4	5	6
FM (MHz)	87.5	89.9	97.9	105.9	108.0	87.5
MW (kHz)	144	153	522	603	1404	1620

- **Measurement input signal**
  - AM modulation frequency : 400 Hz with 30 % modulation degree/factor (999 kHz, 74 dBμ [SSG level])
  - FM modulation frequency : 400 Hz with 22.5 kHz frequency deviation, Pilot 7.5 kHz (97.9 MHz, 66 dBμ [SSG level])

- **Precautions for adjustment**
  1. Apply 30 ph and 33 kΩ to the IF sweeper output circuit and 0.082 μF and 100 kΩ to the input circuit respectively in series.
  2. The output of the IF sweeper should be kept at minimum level within an adjustable range.

Notes:
1. The AM section is subject to non-adjustment assembly.
2. The FM front-end and AM tuner pack are repaired by means of the unit replacement only.

Connections for Adjustment

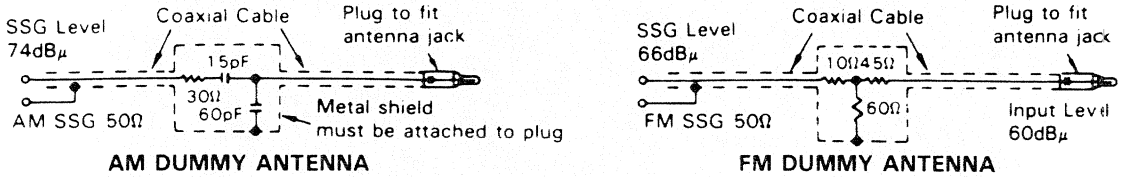

Fig. 3-1

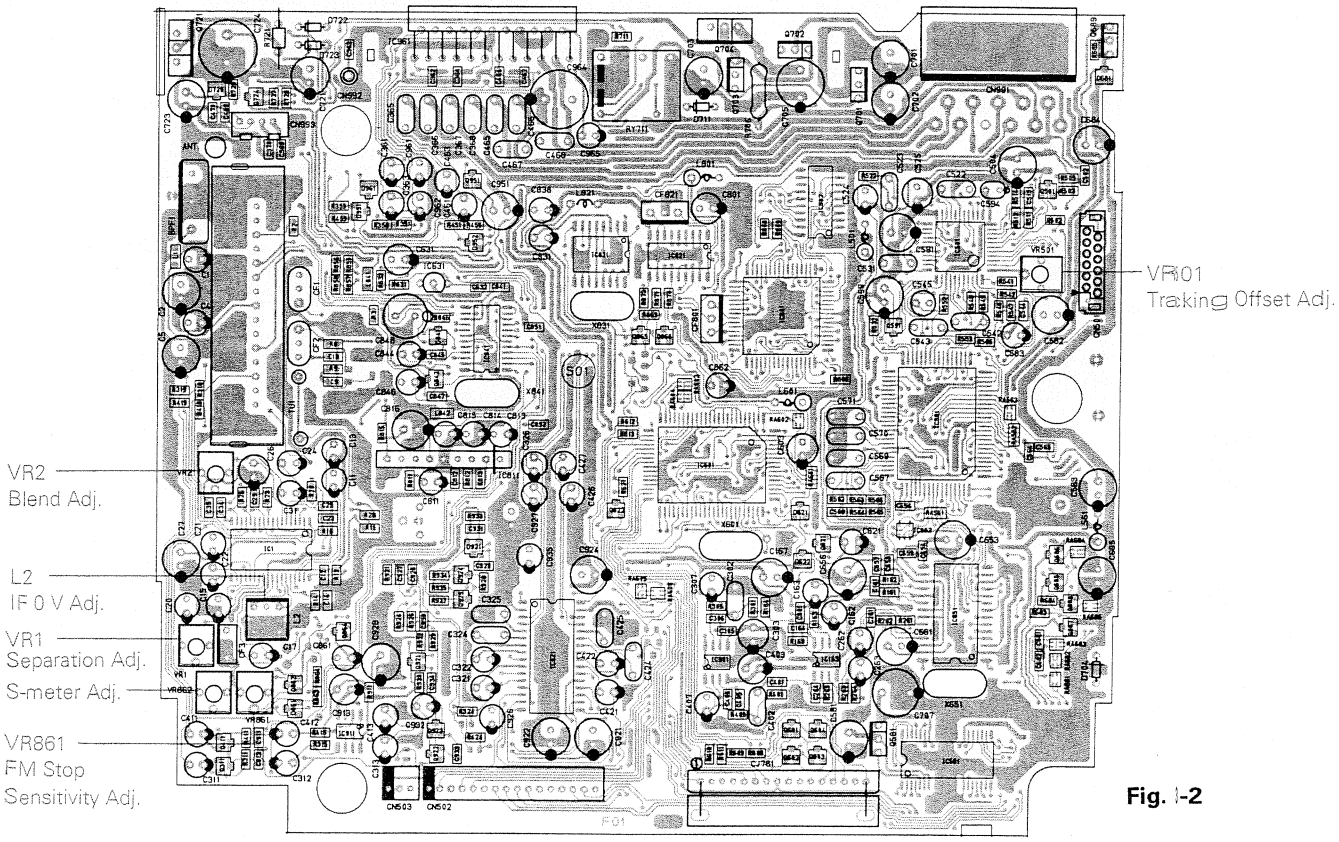

Fig. 3-2

■ Main Adjustments

1. FM 0 V adjustment

With the signal of 97.9 MHz, 66 dBμ (400 Hz, 22.5 kHz dev.) supplied from the signal generator, adjust L2 so that the voltage at both of the TP terminals becomes within 0 ± 10 mV under the receiving conditions.

2. FM stop sensitivity adjustment

With the signal of 97.9 MHz, 26 dBμ (400 Hz, 22.5 kHz dev.) supplied from the signal generator, set VR861 to the position that TP801 (SD) signal level changes from 0 V to 5 V.

3. S-meter adjustment

With the signal of 97.9 MHz, 34 dBμ (400 Hz, 22.5 kHz dev.) supplied from the signal generator, adjust VR862 so that TP802 (SM) voltage becomes 910 ± 50 mV.

4. Separation adjustment

With signal of 97.9 MHz, 66 dBμ (400 Hz, 67.5 kHz dev., 19 kHz, 7.5 kHz dev.) supplied from the signal generator;

1) adjust the BALANCE control to equalize signal levels of L and R channels,
2) turn VR2 fully counterclockwise,
3) adjust VR1 to minimize leak of a channel's output to the other channel and to balance signal levels on L and R channels.

5. BLEND adjustment

With signal of 97.9 MHz, 52 dBμ (400 Hz, 67.5 kHz dev., 19 kHz, 7.5 kHz dev.) supplied from the signal generator to L or R channel, adjust VR2 so that AUX output level of the other channel becomes 20 dB and signal levels of the two channels are balanced.

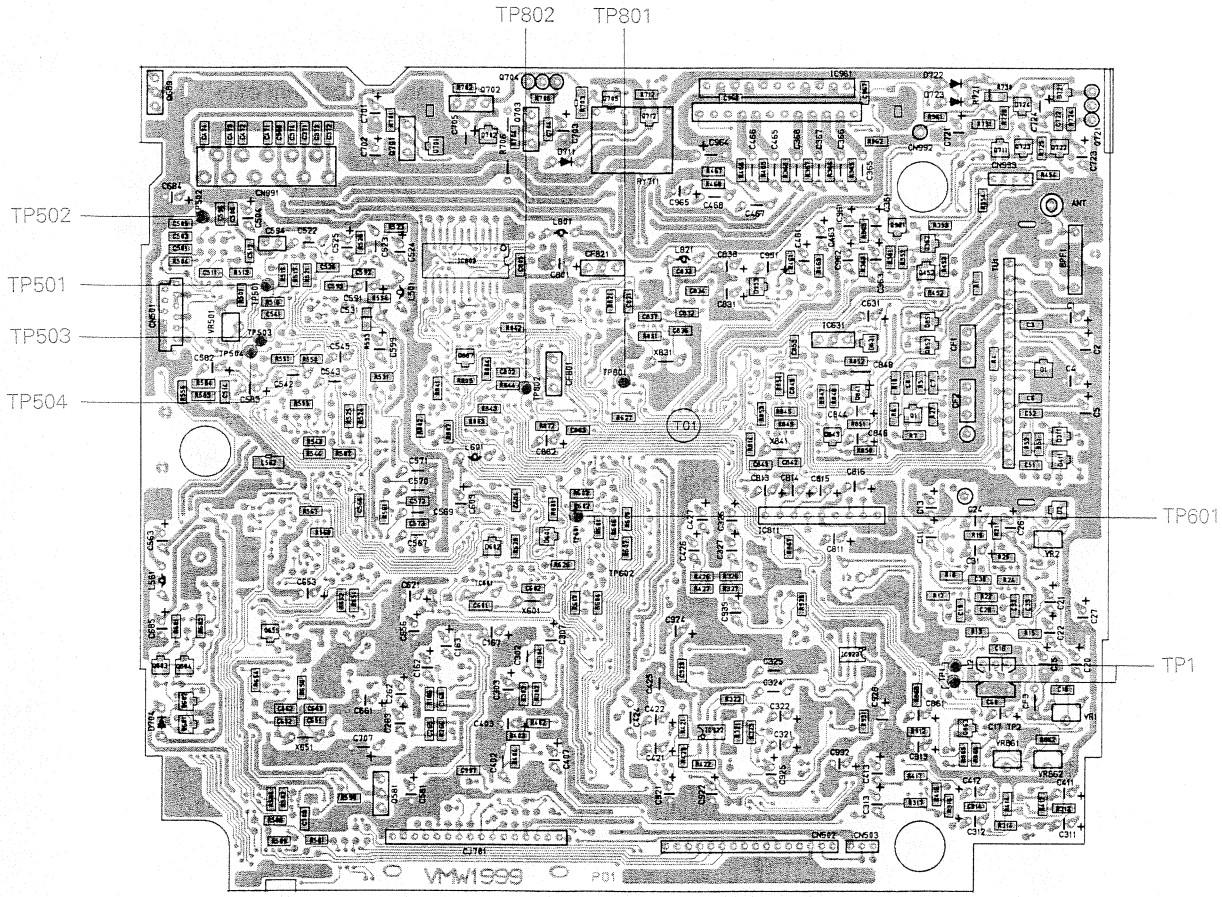

Fig. 3-3

CD section

- **Measuring instruments**
  - Test disc : CTS-1000
  - Check disc : CRG-1211 (Read test [wound disc])
    CRG-1242 (Out track check)
  - Digital oscilloscope (100 MHz) or Tracking offset meter
  - Pulse jitter meter

Note: Before proceeding to do the adjustments, make sure to clean the pickup lens section with a cotton swab or a cleaning kit.

1. Tracking offset adjustment

- Measuring instruments: Oscilloscope, Test disc
- Adjustment procedure:
  1) Connect the oscilloscope between TP503 (TE) and TP502 (VREF).
  2) Play the disc.
  3) Shortcircuit TP601 and GND.
  4) Shortcircuit TP502 and TP504.
  5) Adjust VR501 so that the DC level of the tracking error signal (oscillsocope waveform) becomes zero.
     When the tracking offset meter is used for measurement, it should read "0" (zero).
     Note: Adjust VR501 so that the waveform is vertically symmetric about the zero level. Use a direct doupling oscilloscope inout.

Tracking offset waveform

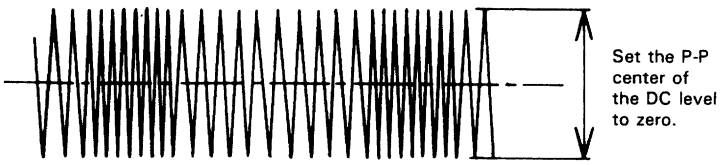

Fig. 3-4

2. Jitter and RF check

Note: When the pickup unit is replaced, proceed to measure and adjust the following items.

1) With the jitter meter connected between TP501 (RF) and TP502 (VREF), play back the test disc (track 1) to confirm that the meter reads 25 nsec or less.
2) Connect the oscilloscope between TP501 and TP502 to confirm that peak-to-peak value of eye-pattern waveform is within 1.2 ± 0.3 V.
3) If measured values do not meet the above specifications, the new pickup unit is out of order.

Eye pattern waveform

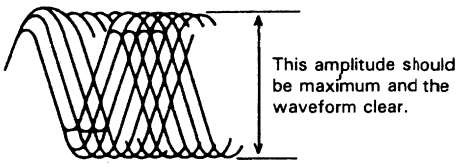

Fig. 3-5

3. Other checks

- **Line out level**
  Play back the track 1 of the CTS-1000 disc while confirming that the output level is less than 7.5 V ± 300 mV (with level difference between R and L channels of 2 dB).
- **Frequency response**
  Confirm the following level difference from 1 kHz signal of the track 1, index 1 of the CTS-1000 disc:
  1) level difference of the track 2, index 1 signal (16 kHz) is within 0 ± 2 dB,
  2) level difference of the track 3, index 2 signal (32 Hz) is within 0 ± 2 dB.
- **Separation**
  Play back the track 5 and the track 7 of the test disc with a 30 kHz low pass filter while confirming that the separation is more than 55 dB respectively.
- **Tracing performance**
  Play back the track 10 of the wound disc (CRG-1211) and confirm that there is nothing abnormal for more than 12 seconds.

4 Wiring Connections

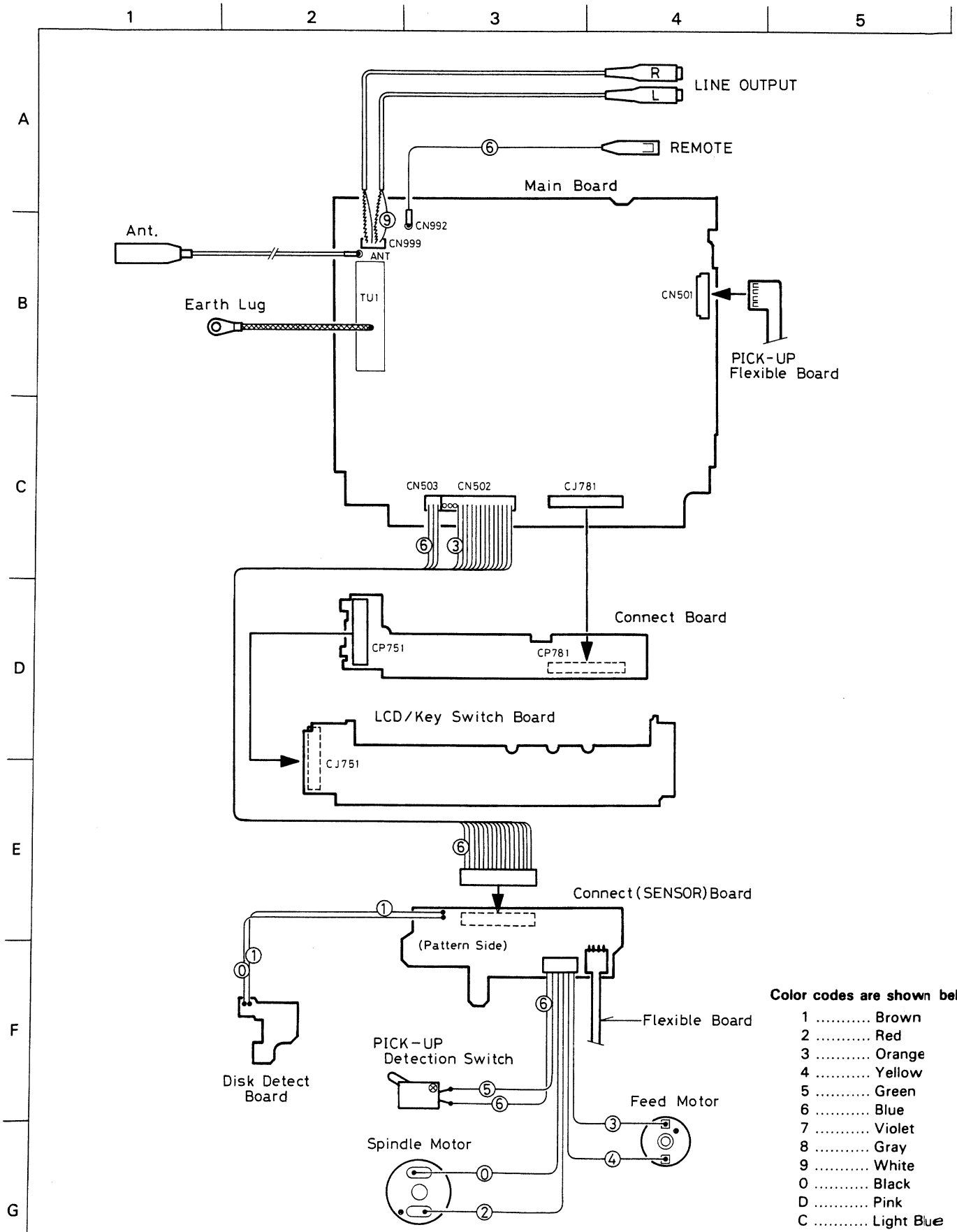

Color codes are shown below.

1 ..... Brown
2 ..... Red
3 ..... Orange
4 ..... Yellow
5 ..... Green
6 ..... Blue
7 ..... Violet
8 ..... Gray
9 ..... White
0 ..... Black
D ..... Pink
C ..... Light Blue

Fig. 4-1

5 Block Diagrams

■ IC Diagram

LA1862M (IC1)

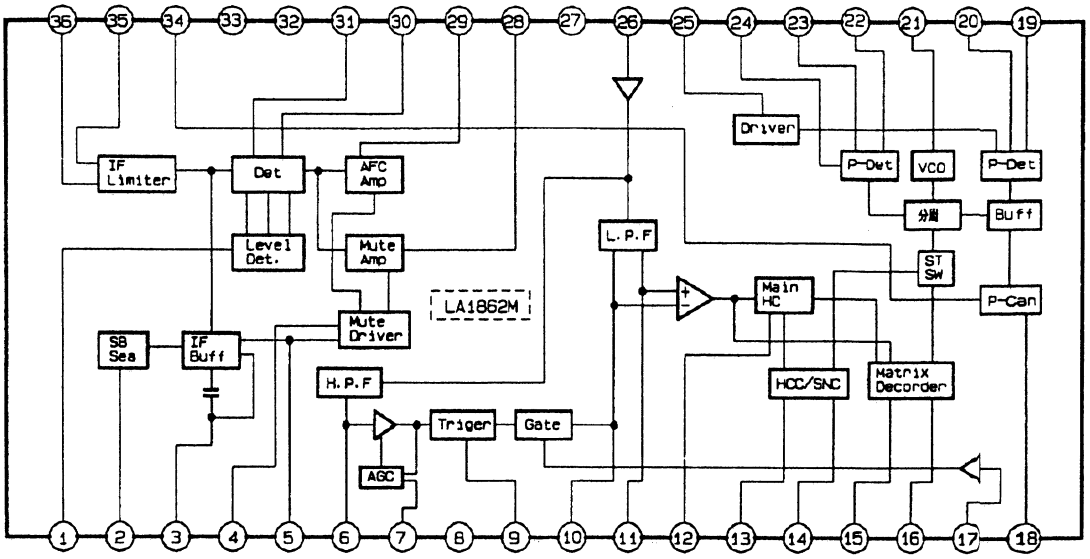

Fig. 5-1

LC7580E (IC741)

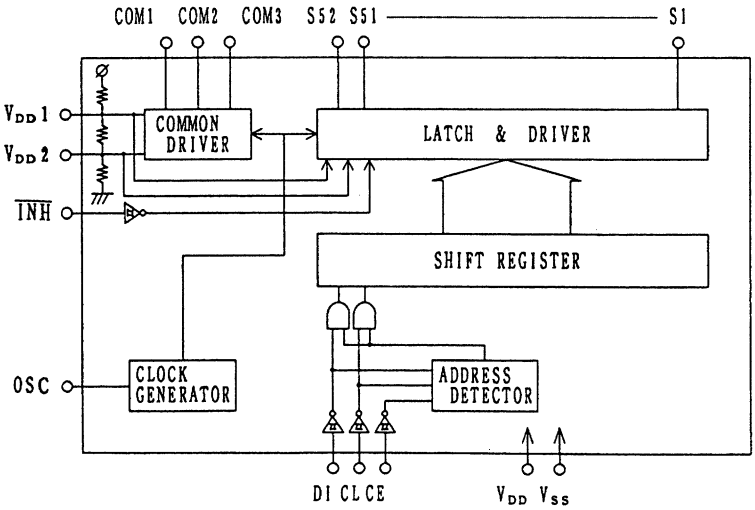

Fig. 5-2

LC7073M (IC821)

Fig. 5-3

TC9236AF (IC561)

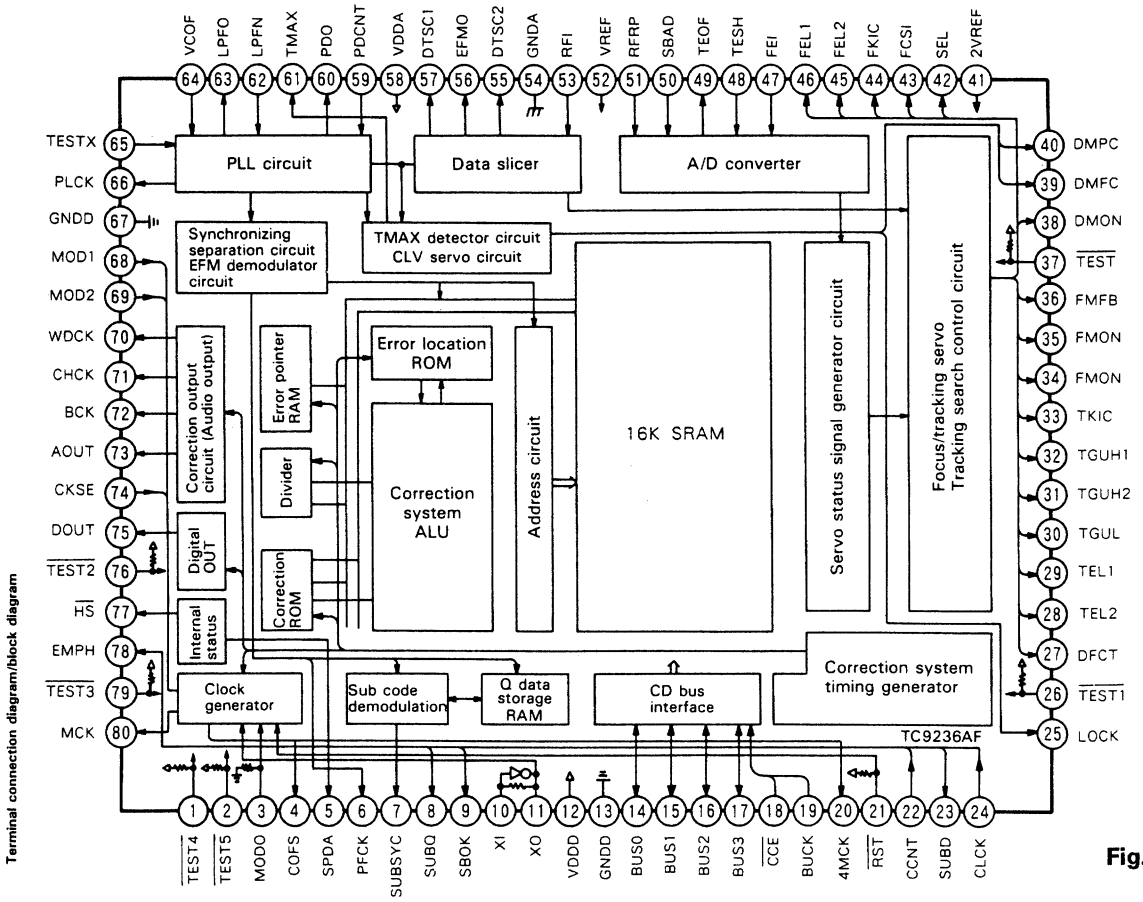

Fig. 5-4

TA8191F (IC501)

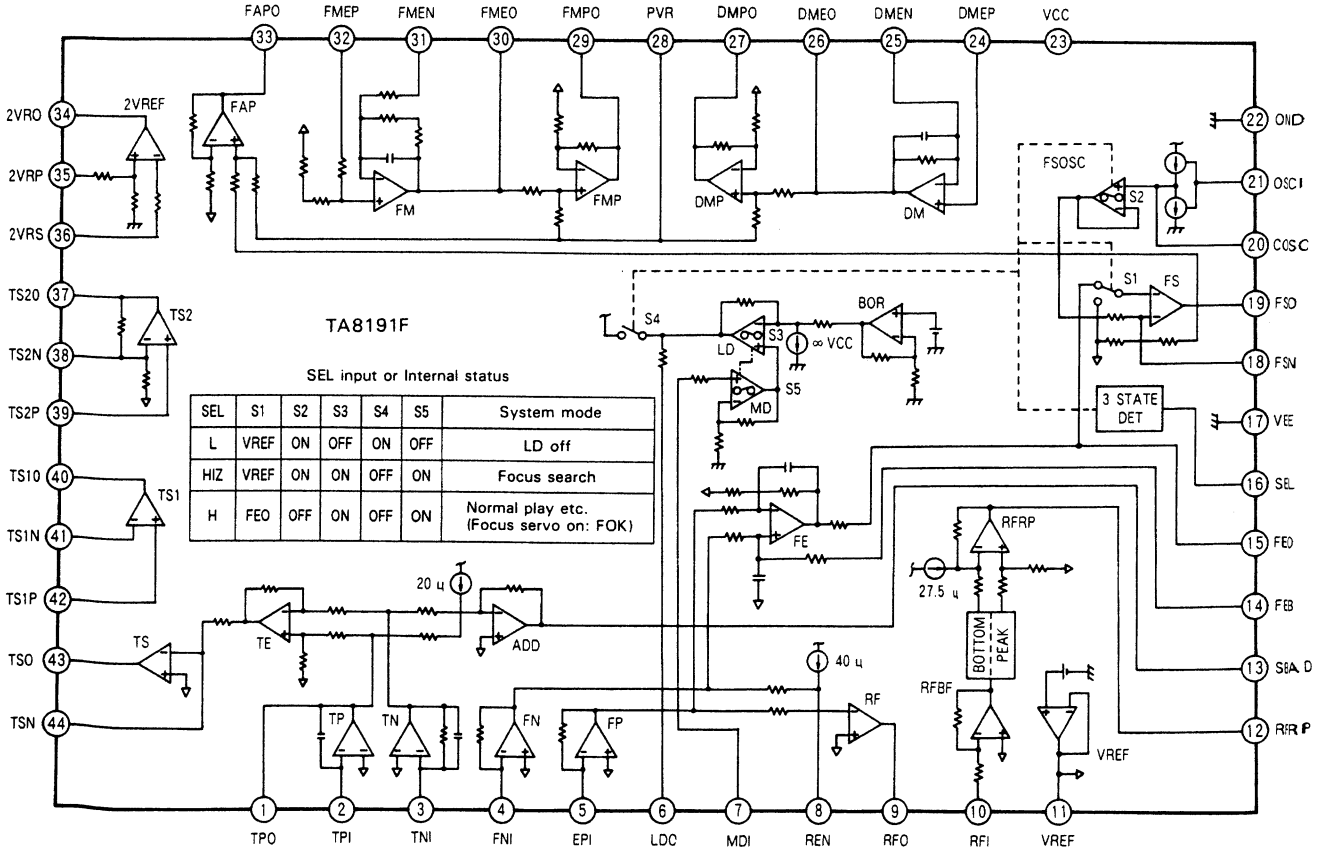

SEL input or Internal status

SEL	S1	S2	S3	S4	S5	System mode
L	VREF	ON	OFF	ON	OFF	LD off
HIZ	VREF	ON	ON	OFF	ON	Focus search
H	FEO	OFF	ON	OFF	ON	Normal play etc. (Focus servo on: FOK)

Fig. 5-5

TEA6320T (IC921)

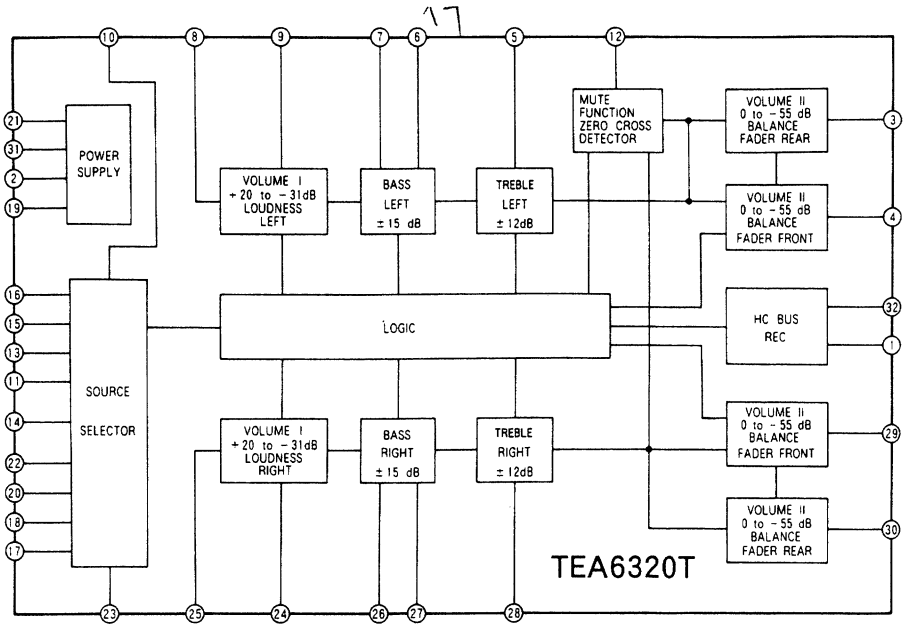

Fig. 5-6

SAA6579T (IC831)

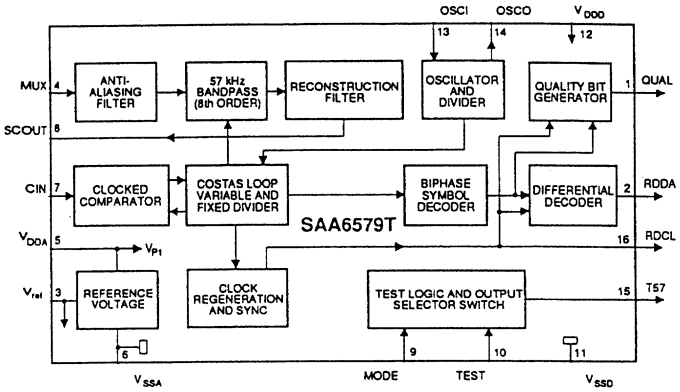

Fig. 5-7

HA13151 (IC961)

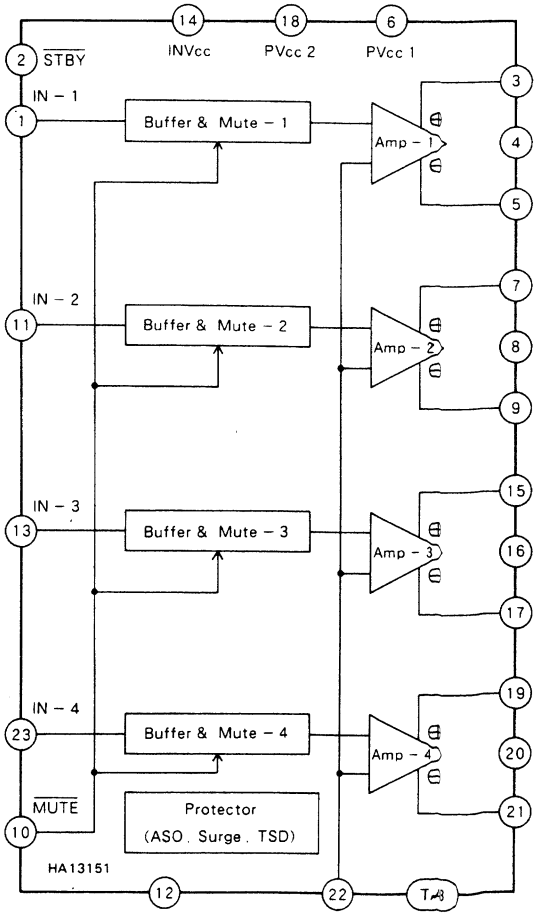

Fig. 5-8

LC72140MHS (IC84)

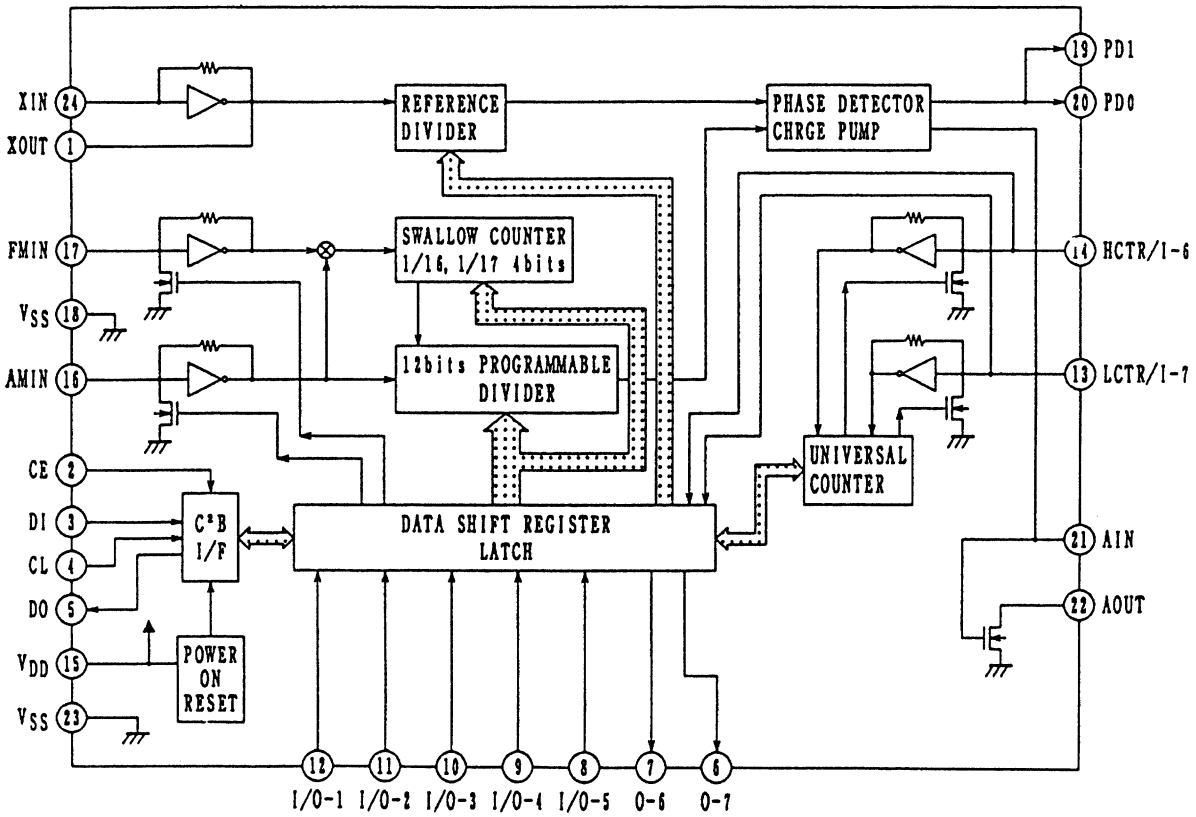

Fig. 5-9

μPC1344 (AM Tuner)

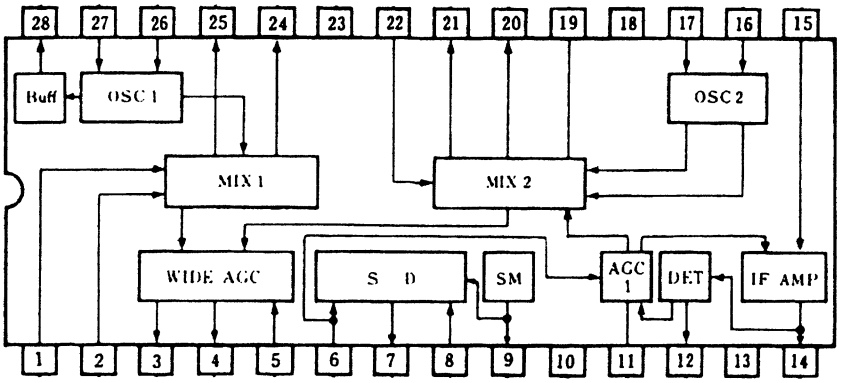

Fig. 5-10

■ Pin Functions

CD Microcomputer for XL-G3900 (μPD75517GF)

Pin No.	Terminal Name	I/O	Function	Active
1	KEY 0	I	Key AD input terminal 0	
2	AV_{REF}		AD converter reference voltage input terminal	
3	V_{DD}		Power source terminal	
4	V_{DD}		Power source terminal	
5	DETACH	I	Detachable panel release detection	Refer to detail.
6	UNIT SELECT	I	Unit select detection	Refer to detail.
7	W. TONE SW	I	Warning tone select detection	Refer to detail.
8	KEY MODE	I	Key select detection	Refer to detail.
9	CLOCK ADJ. (LCD ON)	I	Clock adjusting mode select detection (All LCDs: ON)	L
10	SPEED	I	Spindle motor acceleration time select detection	Refer to detail.
11	TH. PROTECTOR	I	Thermo-protector action detection	L
12	SSR SELECT	I	SSR mode select detection	Refer to detail.
13	A-HBS SELECT	I	A-HBS select detection	Refer to detail.
14	TEL.	I	Car telephone input detection	H
15	FUNC. MODE 0	I	Function mode select detection 0	Refer to detail.
16	FUNC. MODE 1	I	Function mode select detection 1	Refer to detail.
17				
18	DATA	O	LCD driver data output	
19	SCK	O	LCD driver clock output	
20		O		
21	SENSOR 1	I	Disc sensor 1	H
22	SENSOR 2	I	Disc sensor 2	H
23	L. FINISH	I	Loading finish and switch detection/detector	L
24	REST	I	Rest switch detection	L
25	CE	O	LCD driver chip enable signal output	L
26	SDA I	I	Electronic volume data input (I^2C bus)	
27	SDA O	O	Electronic volume data output (I^2C bus)	
28	SCL	O	Electronic volume clock output (I^2C bus)	
29	TUNER	O	Tuner mute control signal	Refer to detail.
30	CD ON	O	CD power source control signal output	H
31	LM 1	O	Loading motor control signal 1 (Forward)	H
32	LM 0	O	Loading motor control signal 0 (Reverse)	H
33	GND		Grand terminal	
34	REMOCON SELECT	I	Remote controller sending/receiving select detection/sensing	Refer to detail.
35	CLOCK MODE	I	Clock function address/destination select detection	Refer to detail.
36	REMOCON	I	Remote controller code input	
37	BUS OUT (IN)	I	BUS OUT input detection	H
38	LED 3 (SHIFT/MANU)	O	LED3 control signal output	H
39	LED 2 (P. SCAN, MONO, RDS)	O	LED2 control signal output	H
40	LED1(REPEAT, RANDOM, NTRO)	O	LED1 control signal output	H
41	SPEANA, SENSER	O	Speana sensitivity select signal output	
42	BUZZER	O	Buzzer clock output	Refer to detail.
43	TIME BASE	O	Clock adjusting clock output	
44	BUS I/O	O	JVC bus data clock input/output control signal output	Refer to detail.
45	LED 4 (A-HBS or LOUD)	O	LED 4 control signal output	H
46	KEY SELECT	I	Key-scan select detection	Refer to detail.

Pin No.	Terminal Name	I/O	Function	Active
47	POWER ON	I	Forced [POWER ON] select detection	H
48	POWER SAVE	I	Power save detection	L
49	BUS INT	I	JVC bus communication interruption detection	H
50	BUS SI	I	JVC bus data input	
51	BUS SO	O	JVC bus data output	
52	BUS SCK	I/O	JVC bus clock input	
53				
54	GND		Grand terminal	
55	XT1 (Not yet connected)	I	32.768 kHz crystal oscillator connection terminal (input)	
56	XT2 (Not yet connected)	O	32.768 kHz crystal oscillator connection terminal	
57			To be connected to the grand terminal	
58	X1	I	4.19 MHz ceramic oscillator connection terminal (input)	
59	X2	O	4.19 MHz ceramic oscillator connection terminal	
60	RESET	I	Microcomputer reset input terminal	L
61	CD/CHANGER REMOTE	O	CD/CHANGER PLAY remote output	H
62	TUNER REMOTE	O	Tuner antenna remote output	H
63	MUTE	O	Volume muting control signal output	H
64	RELAY	O	Power source relay control signal output	L
65	BUS MONITOR	O	JVC bus communication interference/collision detection monitor output	H
66	LSI RESET	O	Reset signal output to TC9236	L
67	BUCK	O	Communication clock output to TC9236	
68	CCE	O	Chip enable signal output to TC9236	L
69	BUS3	I/O	Data input/output 3 to TC9236	
70	BUS2	I/O	Data input/output 2 to TC9236	
71	BUS1	I/O	Data input/output 1 to TC9236	
72	BUS0	I/O	Data input/output 0 to TC9236	
73	AVSS		AD converter reference grand terminal	
74	KEY7	I	Key AD input terminal 7	
75	KEY6	I	Key AD input terminal 6	
76	KEY5	I	Key AD input terminal 5	
77	KEY4	I	Key AD input terminal 4	
78	KEY3	I	Key AD input terminal 3	
79	KEY2	I	Key AD input terminal 2	
80	KEY1	I	Key AD input terminal 1	

[Details of logic]

	Terminal Name	"H"	"L"
5	DETACH	Released state	Attached state
6	UNIT SELECT	With clock function	XL-G3800R
7	W. TONE SW	E. volume selector (IMO)	E. volume selector (IBL/IBR)
8	KEY MODE	KEY MODE 1	KEY MODE 2
10	SPEED	Acceleration time: 1 sec. at 12 cm; 0.5 sec. at 8 cm	Acceleration time: 1.5 sec. at 12 cm; 0.7 sec. at 8 cm
12	SSR SELECT	SSR is ineffective at POWER OFF	SSR is effective at POWER OFF
13	A-HBS SELECT	With A-HBS (without LOUD)	Without A-HBS (with LOUD)
15	FUNC. MODE 0	Tuner: Built-in	Tuner: Hidden-away
16	FUNC. MODE 1	Without AUX IN With AUX IN	
29	TUNER	Mode other than Tuner mode	Tuner mode
34	REMOCON SELECT	Without remote controller	With remote controller
35	CLOCK MODE	Center unit	No center unit
41	SPEANA SENSE	Speana sensitivity select at Low	Speana sensitivity select at High
44	BUS I/O	Data clock output	Data clock input
46	KEY SELECT	Key scan (Key 0 to Key 7)	Key scan (Key 1, 3 and 4)

• JVC bus communication is available adjustment or reference clock.

Allocation of Ports

UPD78013 Tuner Microprocessor

Pin No.	I/O	Name of terminal	Active	Function
1	O	I/O SEL	H	BUS I/O selection output. H: Output; I: Input
2	O	ALARM	H	Alarm output (900 Hz)
3	O	PLL CLK	H	Clock output to PLL LC72140.
4	O	PLL DI	H	Data output to PLL LC72140.
5	O	NC	—	Check signal of S. meter.
6	O	PLL CE	H	[CHIP ENABLE] output to PLL LC72140.
7	I	$\overline{\text{UP CON}}$	L(PU)	Initializing [UP CON] selection input. [UP CON] at "L"
8	O	AF CHECK	H	Time constant selection output. "H" is output at the time of frequency change.
9	—	Vss	—	
10	O	A/D 0	H	Address data output
11	O	A/D 1	H	Address data output
12	O	A/D 2	H	Address data output
13	O	A/D 3	H	Address data output
14	O	A/D 4	H	Address data output
15	O	A/D 5	H	Address data output
16	O	A/D 6	H	Address data output
17	O	A/D 7	H	Address data output
18	O	A 8	H	Address output
19	O	A 9	H	Address output
20	P	A 10	H	Address output
21	O	NC	—	
22	I	$\overline{\text{HIDEAWAY}}$	L(PU)	Initializing [HIDEAWAY] selection input. L: Built-in specification; H: Hide away specification
23	I	SET SEL	H(PU)	Set specification selection input at initializing in the case of built-in specification. L: Cassette receiver; H: CD receiver
24		Vss		
25	I	$\overline{\text{FM IFC}}$	L	FM IF count selection input at initializing H: SD only; L: Combined use of IF count

Pin No.	I/O	Name of terminal	Active	Function
26	I	$\overline{\text{AM IFC}}$	L	AM IF count selection input at initializing H: SD only; L: Combined use of IF count
27	O	$\overline{\text{CEOUT}}$	L	[CHIP ENABLE] output for RAM. #36 PIN input is reversed and output.
28	I	PLL DO		Serial data input from PLL
29	O	$\overline{\text{TP MUTE}}$	L	[TAPE MUTE] output. "L" is output when any station other than traffic information station at the time of traffic information mode.
30	O	$\overline{\text{MUTE}}$	L	[MUTE] output. "L" is output druing muting.
31	O	$\overline{\text{OE}}$	L	OE signal output of S. RAM.
32	O	$\overline{\text{WE}}$	L	WE signal output of S. RAM.
33	I	WAIT		Connect to Vdd (Pull up)
34	O	ASTB	H	Strobe signal output of S. RAM.
35	I	$\overline{\text{RESET}}$	L	Reset input.
36	I	NC		
37	I	$\overline{\text{CE}}$	L	[CHIP ENABLE] input of microcomputer. The microcomputer will be in normal action at "L".
38	I	BUS INT	H	J-BUS interruption input.
39	I	$\overline{\text{RDSSTB}}$	H	Strobe input of RDS decorder.
40		Vdd	—	
41		X2	—	Oscillation frequency: 8 MHz.
42		X1	—	
43		IC	—	Internal connection
44		XT1	—	
45		XT2	—	
46		Vss	—	
47	I	S METER	H	Signal meter input. The voltage proportional roughly to the signal intensity will be input.
48	I	S QUAL	H	Signal grade input. The voltage proportional roughly to the signal receiving conditions will be input.
49	I	SD	H	SD input.
50	I	DEV	H(PU)	Modulation or no modulation input. "H" with modulation.
51	I	$\overline{\text{ST}}$	L(PU)	Input of "L" at ST broadcasting.
52	I	$\overline{\text{SK}}$	L(PU)	SK or no SK signal input. "L" with SK.
53	I	$\overline{\text{DK}}$	L(PU)	DK or no DK signal input "L" with DK.
54	I	$\overline{\text{RDS}}$	L(PU)	RDS or no RDS signal input. "L" with RDS.
55		Vdd	—	
56		Vdd	—	
57	I	SI1	H	Data from RDS decoder.
58	O	SO1 (NC)	H	
59	I	SCK1	H	Clock input from RDS decoder.
60	O	$\overline{\text{MONO}}$	L	Forced [MONO] output. "L" at [MONO] mode.
61	O	$\overline{\text{RES CNT}}$	L	Reset output to RDS decoder.
62	I	JBUS SI	H	Data input to J-BUS.
63	O	JBUS SO	H	Data input from J-BUS.
64	I/O	JBUS SCK	H	Clock input of J-BUS.

Note: [PU] of the active level should be initialized by pulling up the software.

■ Signal Circuit Diagram

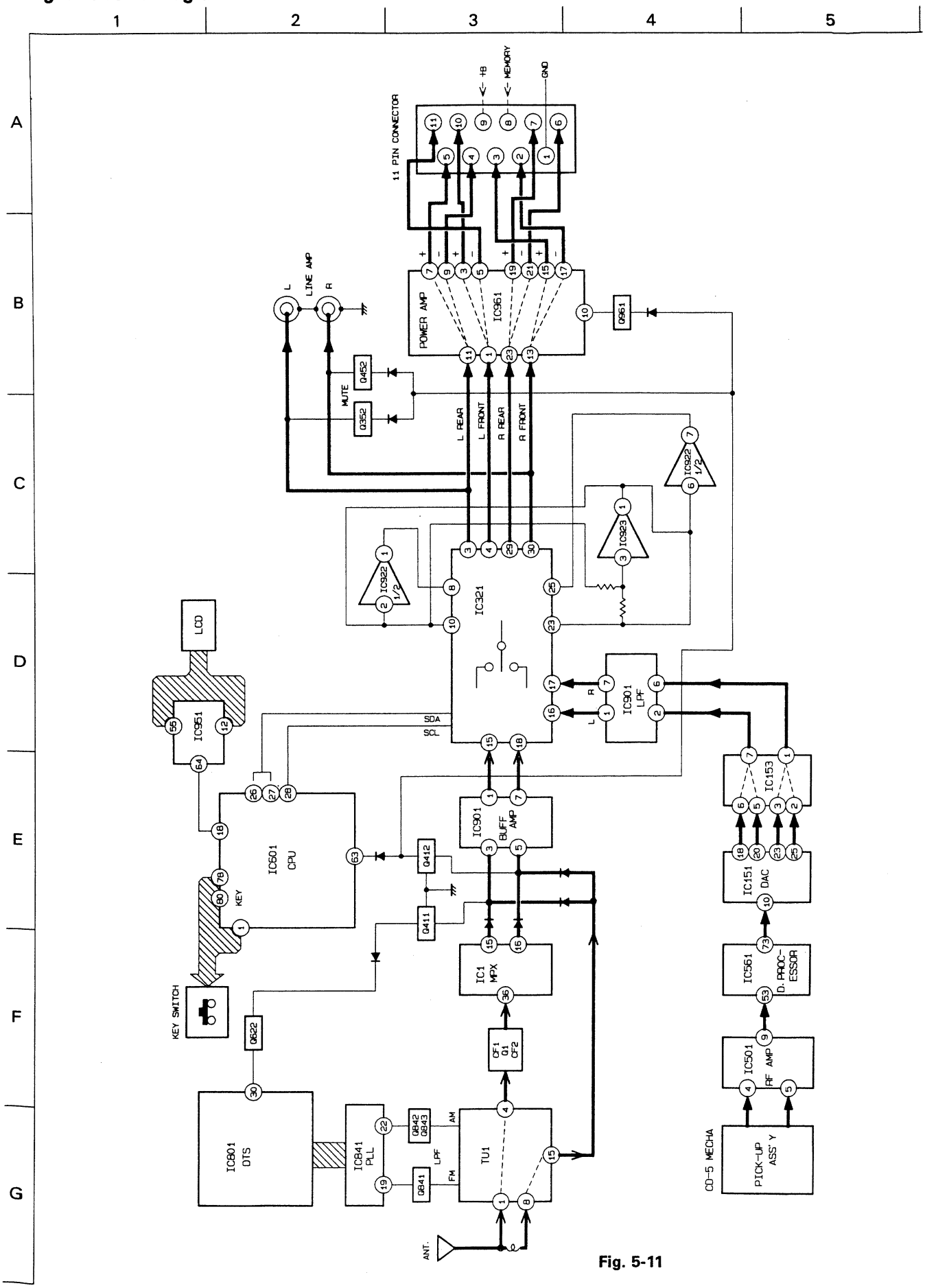

Fig. 5-11

6 Standard Schematic Diagrams

■ Front-end Circuit (TU1)

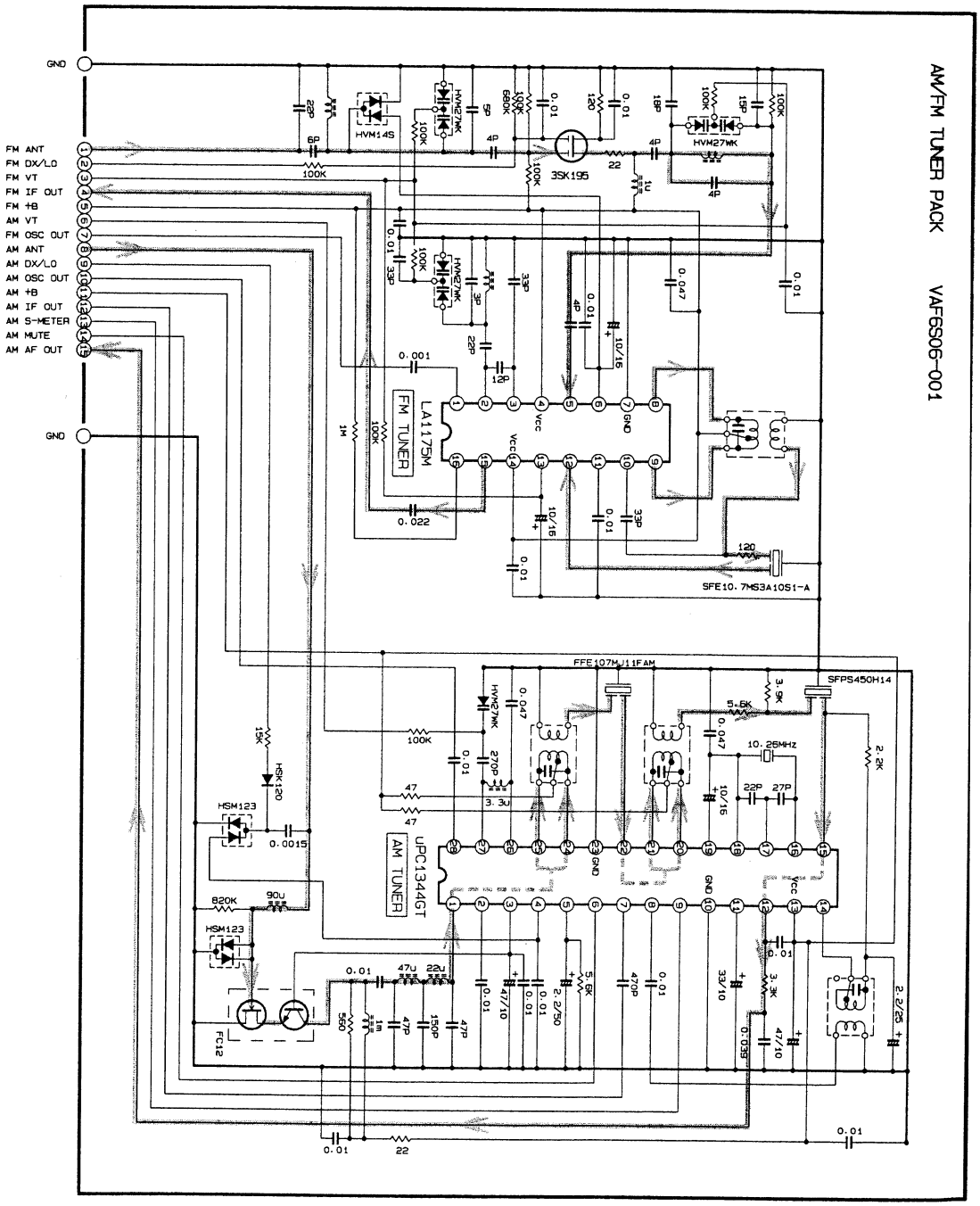

NOTES
ALL RESISTORS ARE 1/10W ±5% METAL GLAZE RESISTOR.
ALL CAPACITORS ARE 50V CERAMIC CAPACITOR
ALL RESISTANCE VALUES ARE IN OHM(Ω).
ALL CAPACITANCE VALUES ARE IN μF(=pF).
ALL E.CAPACITORS ARE SHOWN IN THE FORM OF CAPACITANCE(μF)/RATED VOLTAGE (V).

FM Signal line
MW Signal line

Fig. 6-1

■ Tuner Circuit

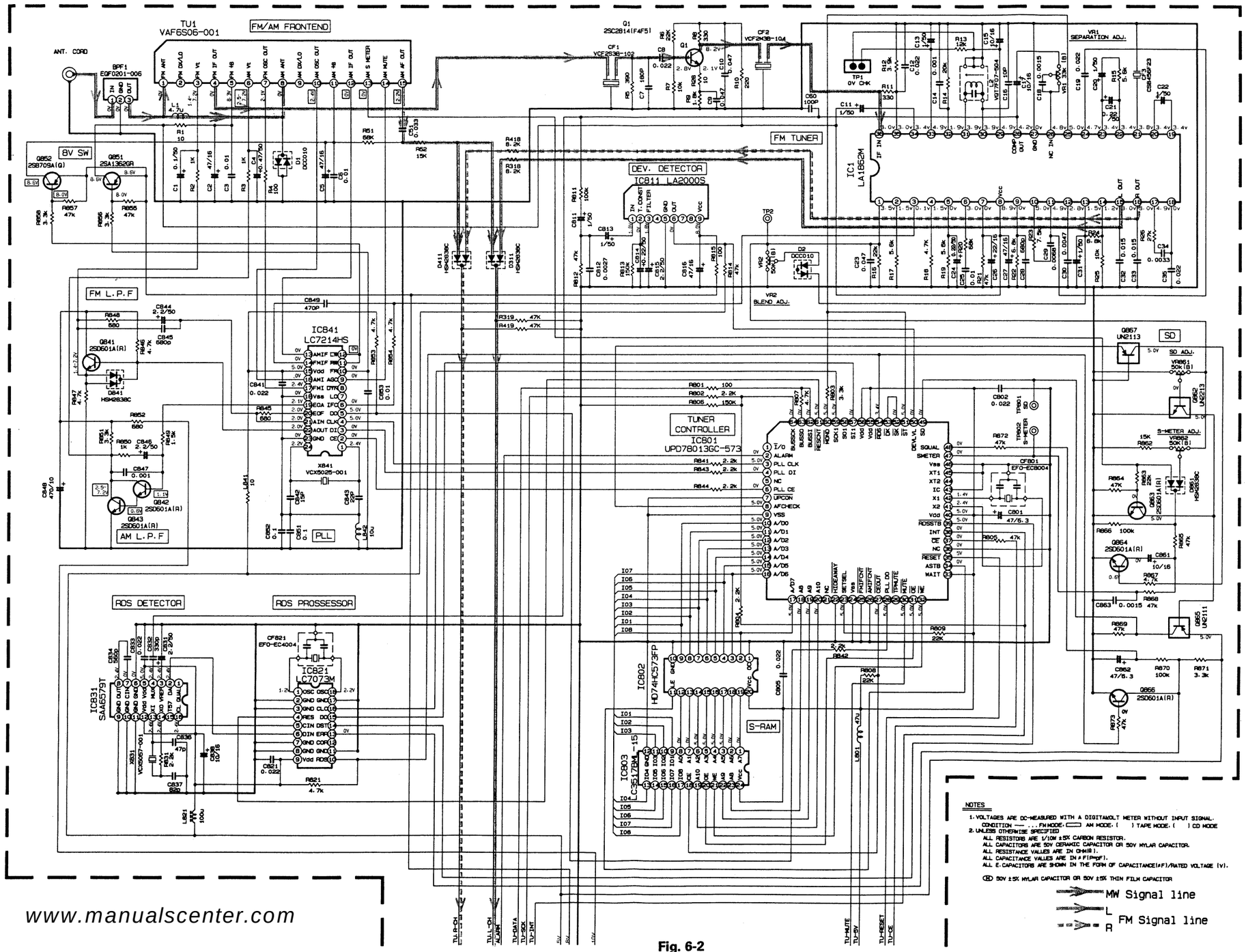

Fig. 6-2

To up side on page 37

■ CD Amplifier Circuit

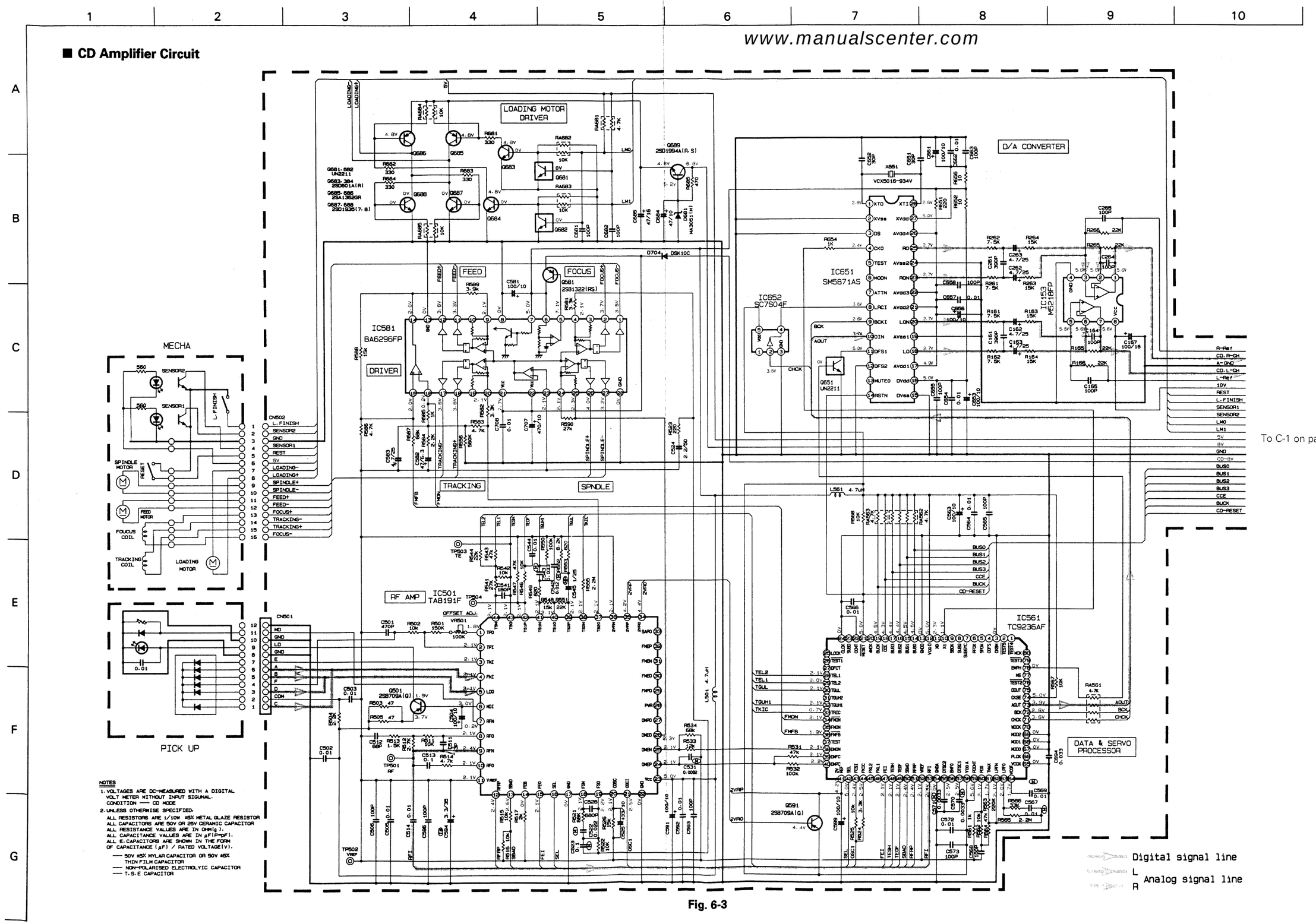

NOTES

1. VOLTAGES ARE DC-MEASURED WITH A DIGITAL VOLT METER WITHOUT INPUT SIGNAL. CONDITION — CD MODE
2. UNLESS OTHERWISE SPECIFIED.
   ALL RESISTORS ARE 1/10W ±5% METAL GLAZE RESISTOR
   ALL CAPACITORS ARE 50V OR 25V CERAMIC CAPACITOR
   ALL RESISTANCE VALUES ARE IN OHM(Ω).
   ALL CAPACITANCE VALUES ARE IN μF(PmpF).
   ALL E.CAPACITORS ARE SHOWN IN THE FORM OF CAPACITANCE (μF) / RATED VOLTAGE(V).
   — 50V ±5% MYLAR CAPACITOR OR 50V ±5% THIN FILM CAPACITOR
   — NON-POLARISED ELECTROLYIC CAPACITOR
   — T.S.E CAPACITOR

Fig. 6-3

■ System Controller Circuit

To lower side on page 35

To C-10 on page 36

To C-1 on page 38

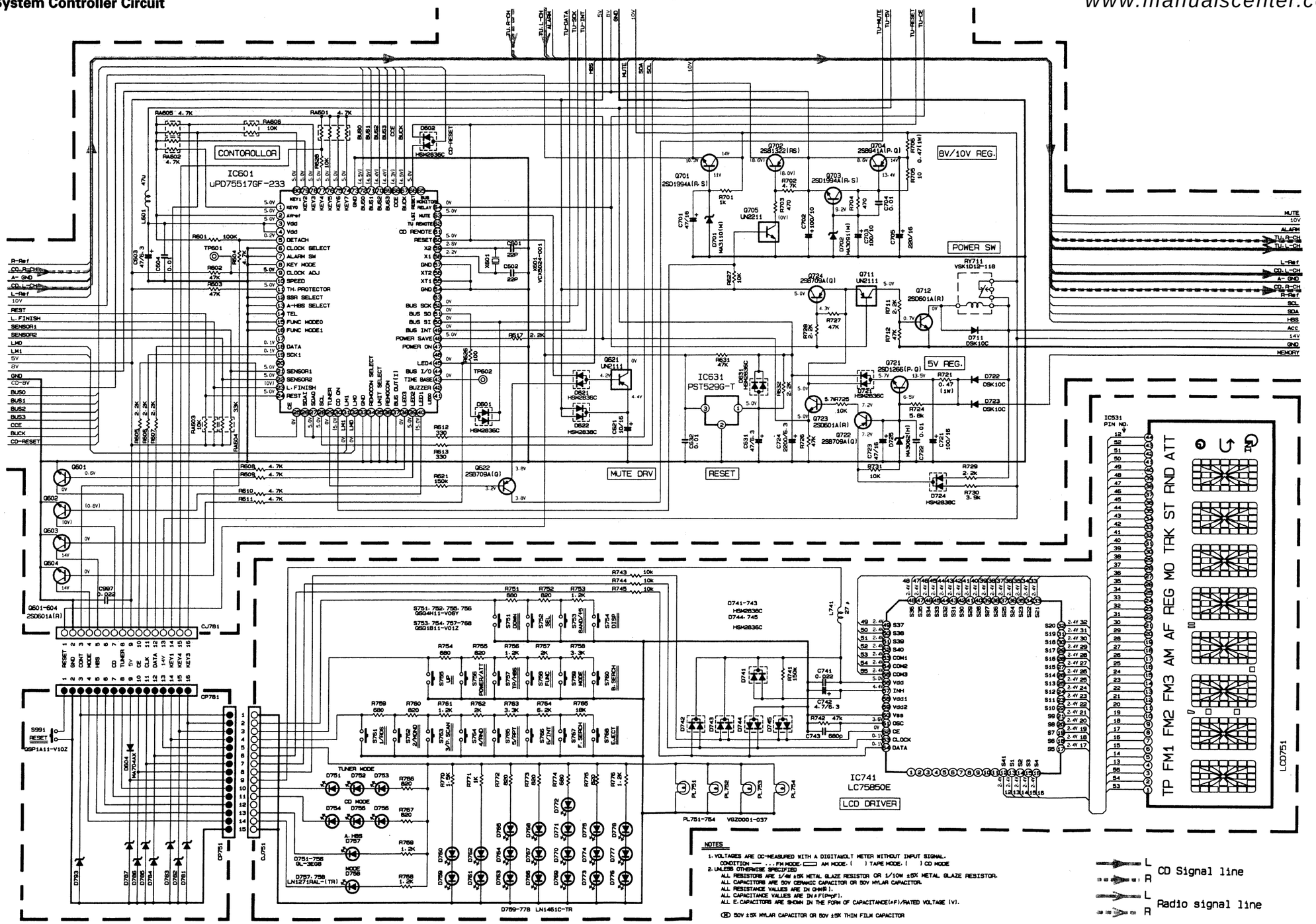

Fig. 6-4

■ Amplifier Circuit

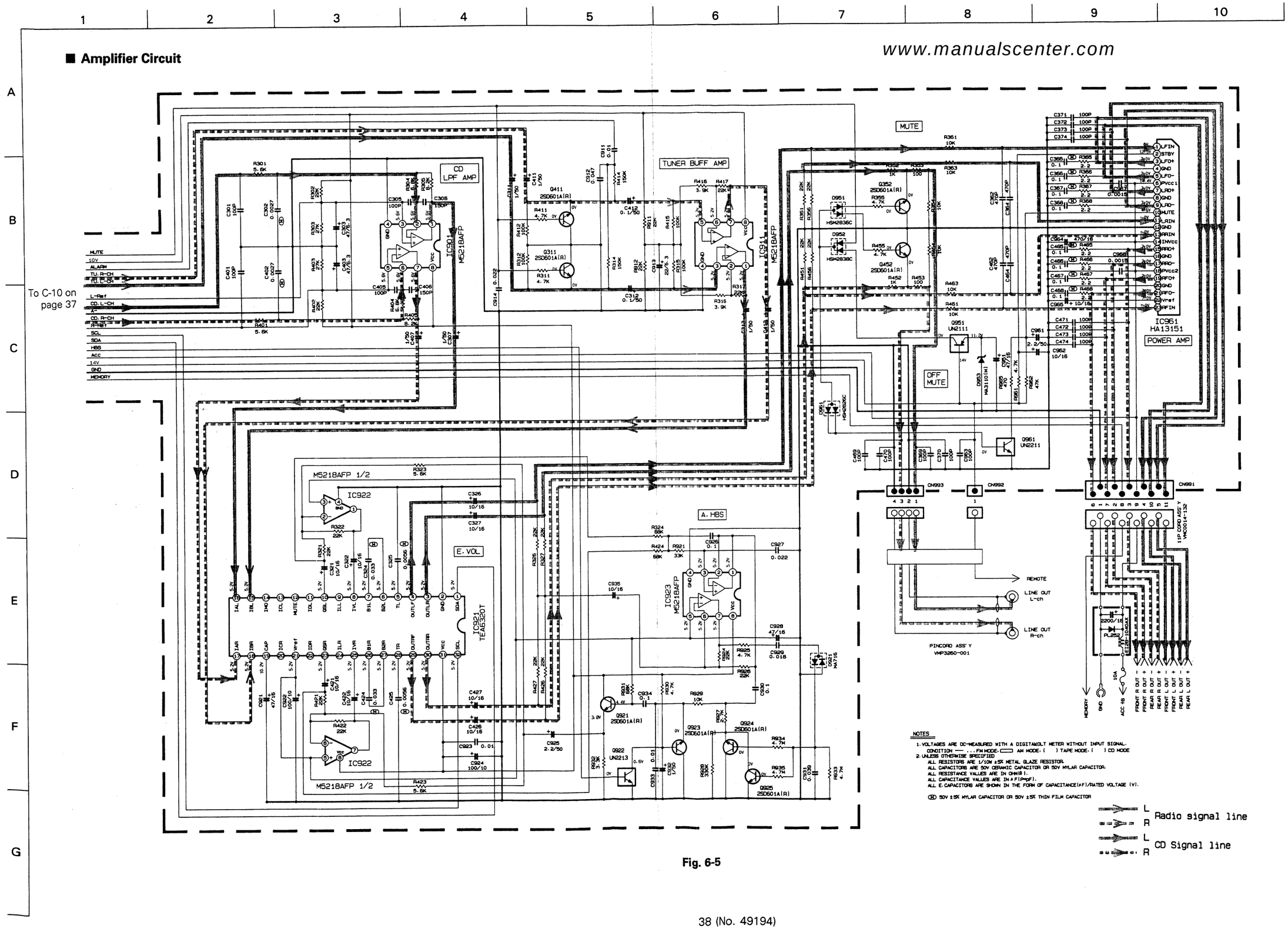

Fig. 6-5

7 Location of P.C. Board Parts and Parts List

Main Board

Top view

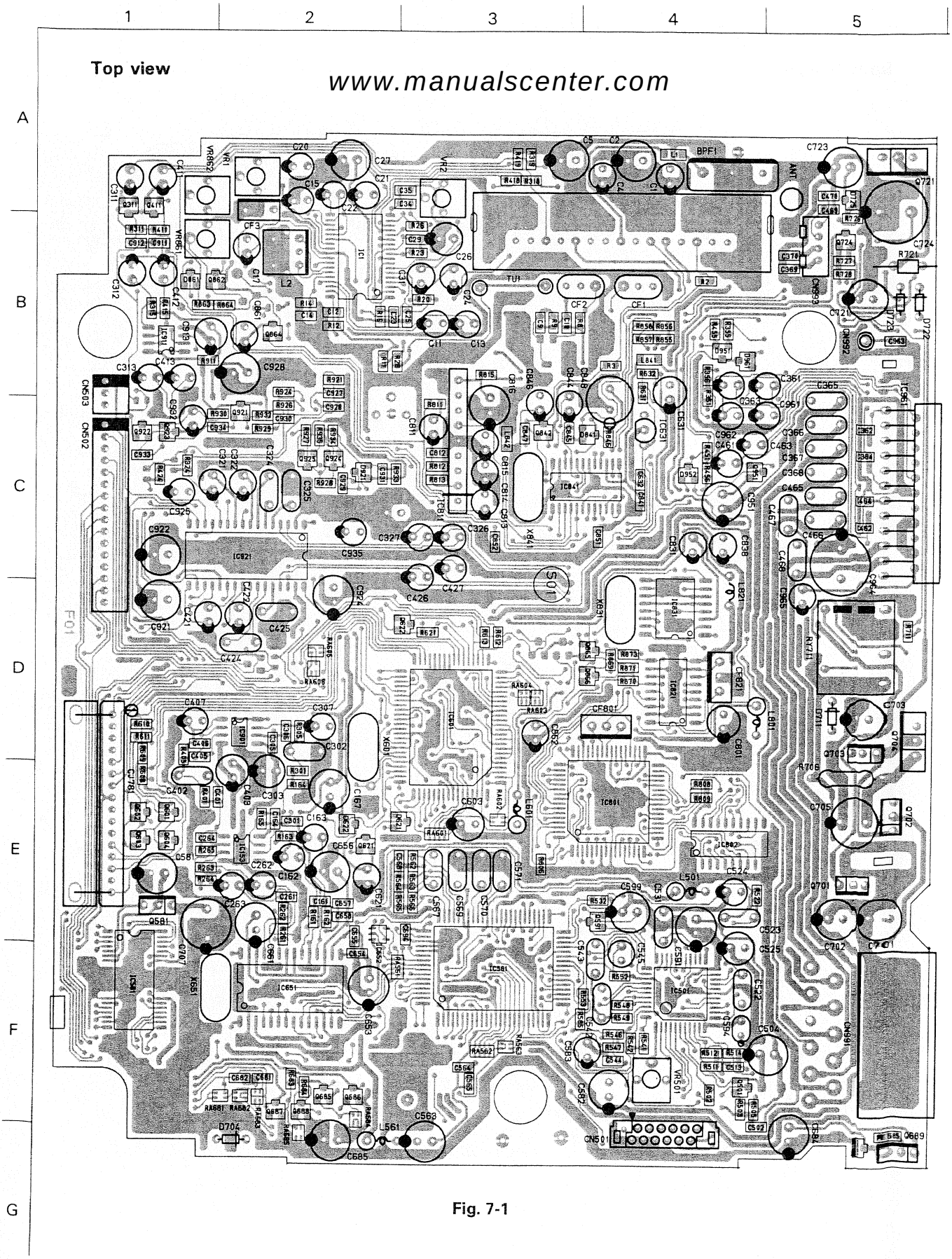

Fig. 7-1

Bottom view

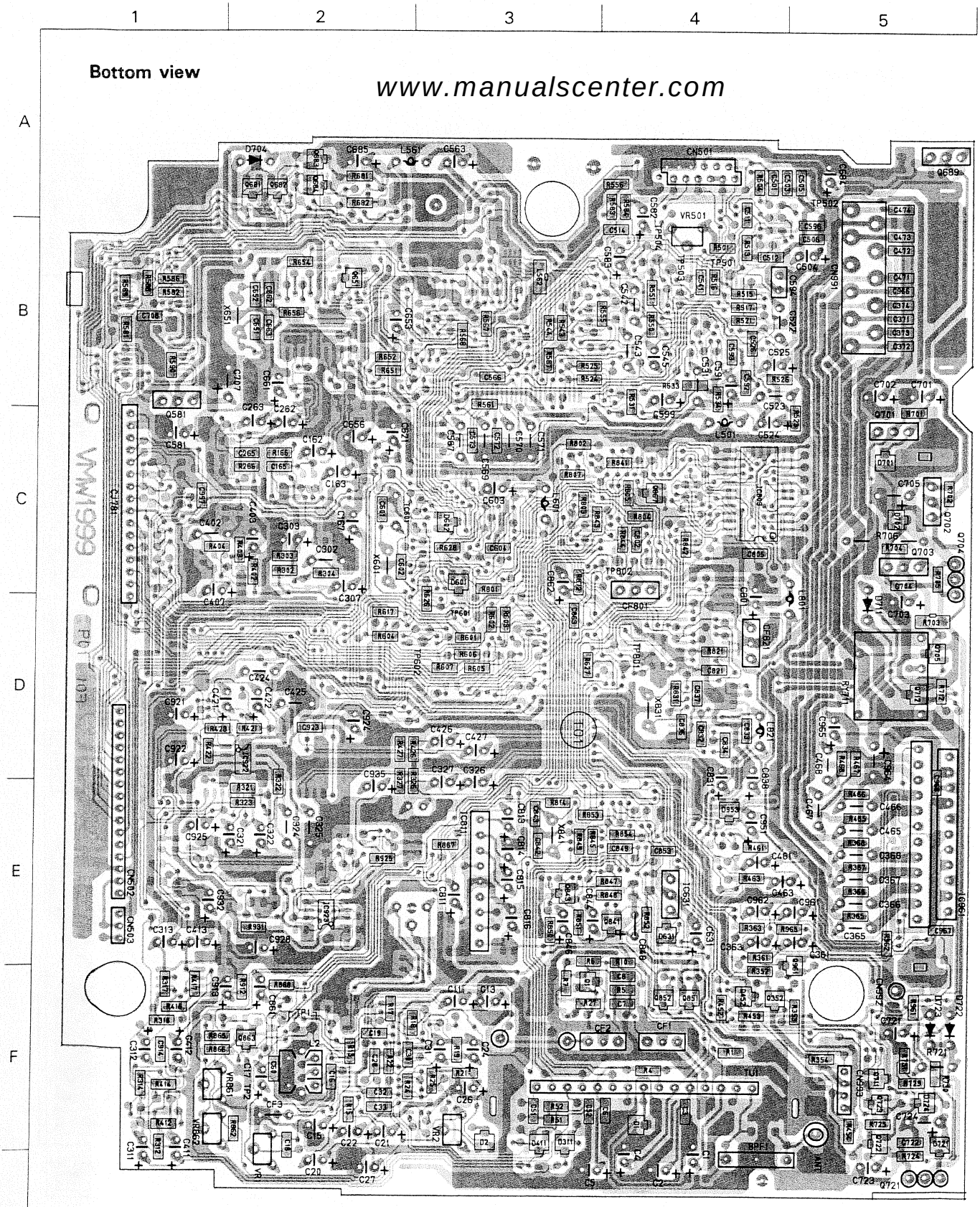

Fig. 7-2

BLOCK NO. 01

⚠	REF.	PARTS NO.	PARTS NAME	REMARKS	SUFFIX
	BPF 1	EQF0201-006	B.P.FILTER		
	C 1	QEK41HM-104	E CAPACITOR	.10MF 20% 50V	
	C 2	QEK41CM-476	E CAPACITOR	47MF 20% 16V	
	C 3	NCB21HK-103AY	C CAPACITOR	.010MF 10% 50V	
	C 4	QEK41HM-474	E CAPACITOR	.47MF 20% 50V	
	C 5	QEK41CM-476	E CAPACITOR	47MF 20% 16V	
	C 6	NCB21HK-103AY	C CAPACITOR	.010MF 10% 50V	
	C 7	NCS21HJ-181AY	C CAPACITOR	180PF 5% 50V	
	C 8	NCB21HK-223AY	C CAPACITOR	.022MF 10% 50V	
	C 9	NCB21EK-473AY	C CAPACITOR	.047MF 10% 25V	
	C 10	NCB21EK-473AY	C CAPACITOR	.047MF 10% 25V	
	C 11	QEK41HM-105	E CAPACITOR	1.0MF 20% 50V	
	C 12	NCB21HK-223AY	C CAPACITOR	.022MF 10% 50V	
	C 13	QEK41HM-105	E CAPACITOR	1.0MF 20% 50V	
	C 14	NCB21HK-102AY	C CAPACITOR	1000PF 10% 50V	
	C 15	QEK41CM-106	E CAPACITOR	10MF 20% 16V	
	C 16	NCT21CH-100AY	C CAPACITOR	10PF +50:-10% 1	
	C 17	QEK41CM-106	E CAPACITOR	10MF 20% 16V	
	C 18	NCB21HK-152AY	C CAPACITOR	1500PF 10% 50V	
	C 19	NCB21HK-223AY	C CAPACITOR	.022MF 10% 50V	
	C 20	QEK41HM-105	E CAPACITOR	1.0MF 20% 50V	
	C 21	QEK41HM-224	E CAPACITOR	.22MF 20% 50V	
	C 22	QEK41HM-105	E CAPACITOR	1.0MF 20% 50V	
	C 23	NCB21EK-473AY	C CAPACITOR	.047MF 10% 25V	
	C 24	QEK41HM-224	E CAPACITOR	.22MF 20% 50V	
	C 25	NCB21HK-103AY	C CAPACITOR	.010MF 10% 50V	
	C 26	QEK41CM-226	E CAPACITOR	22MF 20% 16V	
	C 27	QEK41CM-476	E CAPACITOR	47MF 20% 16V	
	C 28	NCB21HK-681AY	C CAPACITOR	680PF 10% 50V	
	C 29	NCB21HK-682AY	C CAPACITOR	680[illegible]F 10% 50V	
	C 30	NCB21HK-472AY	C CAPACITOR	4700PF 10% 50V	
	C 31	QEK41HM-105	E CAPACITOR	1.0MF 20% 50V	
	C 32	NCB21HK-153AY	C CAPACITOR	.015MF 10% 50V	
	C 33	NCB21HK-153AY	C CAPACITOR	.015MF 10% 50V	
	C 34	NCB21HK-332AY	C CAPACITOR	3300PF 10% 50V	
	C 35	NCB21HK-223AY	C CAPACITOR	.022MF 10% 50V	
	C 51	NCB21HK-333AY	C CAPACITOR	.033MF 10% 50V	
	C 60	NCS21HJ-101AY	C CAPACITOR	100PF 5% 50V	
	C 161	NCT21CH-391AY	C CAPACITOR	390PF +50:-10%	
	C 162	QEK41EM-475	E CAPACITOR	4.7MF 20% 25V	
	C 163	QEK41EM-475	E CAPACITOR	4.7MF 20% 25V	
	C 164	NCT21CH-101AY	C CAPACITOR	100PF +50:-10%	
	C 165	NCS21HJ-101AY	C CAPACITOR	100PF 5% 50V	
	C 167	QEKF1CM-107ZN	E CAPACITOR	100MF 20% 16V	
	C 261	NCT21CH-391AY	C CAPACITOR	390PF +50:-10%	
	C 262	QEK41EM-475	E CAPACITOR	4.7MF 20% 25V	
	C 263	QEK41EM-475	E CAPACITOR	4.7MF 20% 25V	
	C 264	NCT21CH-101AY	C CAPACITOR	100PF +50:-10%	
	C 265	NCS21HJ-101AY	C CAPACITOR	100PF 5% 50V	
	C 301	NCT21CH-101AY	C CAPACITOR	100PF +50:-10%	
	C 302	QFLA1HJ-272ZM	M CAPACITOR	2700PF 5% 50V	
	C 303	QERF0JM-476ZN	E CAPACITOR	47MF 20% 6.3V	
	C 305	NCT21CH-101AY	C CAPACITOR	100PF +50:-10%	
	C 306	NCS21HJ-151AY	C CAPACITOR	150PF 5% 50V	
	C 307	QEK41HM-105	E CAPACITOR	1.0MF 20% 50V	

BLOCK NO. 01

⚠	REF.	PARTS NO.	PARTS NAME	REMARKS	SUFFIX
	C 311	QEK41HM-105	E CAPACITOR	1.0MF 20% 50V	
	C 312	QEK41HM-104	E CAPACITOR	.10MF 20% 50V	
	C 313	QEK41HM-105	E CAPACITOR	1.0MF 20% 50V	
	C 321	QEK41CM-106	E CAPACITOR	10MF 20% 16V	
	C 322	QEK41CM-106	E CAPACITOR	10MF 20% 16V	
	C 324	QFV41HJ-333	TF CAPACITOR	.033MF 5% 50V	
	C 325	QFLA1HJ-562ZM	M CAPACITOR	5600PF 5% 50V	
	C 326	QER41CM-106M	E CAPACITOR	10MF 20% 16V	
	C 327	QER41CM-106M	E CAPACITOR	10MF 20% 16V	
	C 362	NCT21CH-471AY	C CAPACITOR	470PF +50:-10%	
	C 364	NCT21CH-471AY	C CAPACITOR	470PF +50:-10%	
	C 365	QFV41HJ-104	TF CAPACITOR	.10MF 5% 50V	
	C 366	QFV41HJ-104	TF CAPACITOR	.10MF 5% 50V	
	C 367	QFV41HJ-104	TF CAPACITOR	.10MF 5% 50V	
	C 368	QFV41HJ-104	TF CAPACITOR	.10MF 5% 50V	
	C 369	NCS21HJ-101AY	C CAPACITOR	100PF 5% 50V	
	C 370	NCS21HJ-101AY	C CAPACITOR	100PF 5% 50V	
	C 371	NCS21HJ-101AY	C CAPACITOR	100PF 5% 50V	
	C 372	NCS21HJ-101AY	C CAPACITOR	100PF 5% 50V	
	C 373	NCS21HJ-101AY	C CAPACITOR	100PF 5% 50V	
	C 374	NCS21HJ-101AY	C CAPACITOR	100PF 5% 50V	
	C 401	NCT21CH-101AY	C CAPACITOR	100PF +50:-10%	
	C 402	QFLA1HJ-272ZM	M CAPACITOR	2700PF 5% 50V	
	C 403	QERF0JM-476ZN	E CAPACITOR	47MF 20% 6.3V	
	C 405	NCT21CH-101AY	C CAPACITOR	100PF +50:-10%	
	C 406	NCS21HJ-151AY	C CAPACITOR	150PF 5% 50V	
	C 407	QEK41HM-105	E CAPACITOR	1.0MF 20% 50V	
	C 411	QEK41HM-105	E CAPACITOR	1.0MF 20% 50V	
	C 412	QEK41HM-104	E CAPACITOR	.10MF 20% 50V	
	C 413	QEK41HM-105	E CAPACITOR	1.0MF 20% 50V	
	C 421	QEK41CM-106	E CAPACITOR	10MF 20% 16V	
	C 422	QEK41CM-106	E CAPACITOR	10MF 20% 16V	
	C 424	QFV41HJ-333	TF CAPACITOR	.033MF 5% 50V	
	C 425	QFLA1HJ-562ZM	M CAPACITOR	5600PF 5% 50V	
	C 426	QER41CM-106M	E CAPACITOR	10MF 20% 16V	
	C 427	QER41CM-106M	E CAPACITOR	10MF 20% 16V	
	C 462	NCT21CH-471AY	C CAPACITOR	470PF +50:-10%	
	C 464	NCT21CH-471AY	C CAPACITOR	470PF +50:-10%	
	C 465	QFV41HJ-104	TF CAPACITOR	.10MF 5% 50V	
	C 466	QFV41HJ-104	TF CAPACITOR	.10MF 5% 50V	
	C 467	QFV41HJ-104	TF CAPACITOR	.10MF 5% 50V	
	C 468	QFV41HJ-104	TF CAPACITOR	.10MF 5% 50V	
	C 469	NCS21HJ-101AY	C CAPACITOR	100PF 5% 50V	
	C 470	NCS21HJ-101AY	C CAPACITOR	100PF 5% 50V	
	C 471	NCS21HJ-101AY	C CAPACITOR	100PF 5% 50V	
	C 472	NCS21HJ-101AY	C CAPACITOR	100PF 5% 50V	
	C 473	NCS21HJ-101AY	C CAPACITOR	100PF 5% 50V	
	C 474	NCS21HJ-101AY	C CAPACITOR	100PF 5% 50V	
	C 501	NCS21HJ-471AY	C CAPACITOR	470PF 5% 50V	
	C 502	NCB21HK-103AY	C CAPACITOR	.010MF 10% 50V	
	C 503	NCB21HK-103AY	C CAPACITOR	.010MF 10% 50V	
	C 504	QEKF1AM-107ZN	E CAPACITOR	100MF 20% 10V	
	C 505	NCB21HK-103AY	C CAPACITOR	.010MF 10% 50V	
	C 506	NCS21HJ-101AY	C CAPACITOR	100PF 5% 50V	
	C 511	NCS21HC-3R0AY	C CAPACITOR	3.0PF 50V	

BLOCK NO. 01

⚠	REF.	PARTS NO.	PARTS NAME	REMARKS	SUFFIX
	C 512	NCT21CH-680	C CAPACITOR	68PF +50:-10% 1	
	C 513	NCB21EK-104AY	C CAPACITOR	.10MF 10% 25V	
	C 514	NCB21HK-103AY	C CAPACITOR	.010MF 10% 50V	
	C 522	QFV41HJ-223	TF CAPACITOR	.022MF 5% 50V	
	C 523	QFV41HJ-104	TF CAPACITOR	.10MF 5% 50V	
	C 524	QEK41HM-225	E CAPACITOR	2.2MF 20% 50V	
	C 525	QEKF1AM-336ZN	E CAPACITOR	33MF 20% 10V	
	C 526	NCB21HK-681AY	C CAPACITOR	680PF 10% 50V	
	C 531	QFJ31HJ-822ZN	M CAPACITOR	8200PF 5% 50V	
	C 541	NCS21HJ-181AY	C CAPACITOR	180PF 5% 50V	
	C 542	QFV41HJ-123	TF CAPACITOR	.012MF 5% 50V	
	C 543	QFV41HJ-333	TF CAPACITOR	.033MF 5% 50V	
	C 544	NCB21HK-103AY	C CAPACITOR	.010MF 10% 50V	
	C 545	QEPJ1HM-105ZM	NP CAPACITOR	1.0MF 20% 50V	
	C 563	QEKF1AM-107ZN	E CAPACITOR	100MF 20% 10V	
	C 564	NCB21HK-103AY	C CAPACITOR	.010MF 10% 50V	
	C 565	NCS21HJ-101AY	C CAPACITOR	100PF 5% 50V	
	C 566	NCB21HK-103AY	C CAPACITOR	.010MF 10% 50V	
	C 567	QFV71HJ-103	TF CAPACITOR	.010MF 5% 50V	
	C 568	NCS21HJ-101AY	C CAPACITOR	100PF 5% 50V	
	C 569	QFV71HJ-103	TF CAPACITOR	.010MF 5% 50V	
	C 570	QFLA1HJ-332ZM	M CAPACITOR	3300PF 5% 50V	
	C 571	QFLA1HJ-332ZM	M CAPACITOR	3300PF 5% 50V	
	C 572	NCB21HK-103AY	C CAPACITOR	.010MF 10% 50V	
	C 573	NCS21HJ-101AY	C CAPACITOR	100PF 5% 50V	
	C 581	QEKF1AM-107ZN	E CAPACITOR	100MF 20% 10V	
	C 582	QERFOJM-476ZN	E CAPACITOR	47MF 20% 6.3V	
	C 583	QEK41EM-475	E CAPACITOR	4.7MF 20% 25V	
	C 591	QEKF1AM-107ZN	E CAPACITOR	100MF 20% 10V	
	C 592	NCB21HK-103AY	C CAPACITOR	.010MF 10% 50V	
	C 593	NCS21HJ-101AY	C CAPACITOR	100PF 5% 50V	
	C 594	QEE41VM-335B	TS E CAPACITOR	3.3MF 20% 35V	
	C 596	NCS21HJ-101AY	C CAPACITOR	100PF 5% 50V	
	C 599	QEKF1AM-107ZN	E CAPACITOR	100MF 20% 10V	
	C 601	NCT21CH-220AY	C CAPACITOR	22PF +50:-10% 1	
	C 602	NCT21CH-220AY	C CAPACITOR	22PF +50:-10% 1	
	C 603	QEK40JM-476	E CAPACITOR	47MF 20% 6.3V	
	C 604	NCB21HK-103AY	C CAPACITOR	.010MF 10% 50V	
	C 621	QEK41CM-106	E CAPACITOR	10MF 20% 16V	
	C 631	QEK40JM-476	E CAPACITOR	47MF 20% 6.3V	
	C 632	NCB21HK-103AY	C CAPACITOR	.010MF 10% 50V	
	C 651	NCS21HJ-300AY	C CAPACITOR	30PF 5% 50V	
	C 652	NCS21HJ-300AY	C CAPACITOR	30PF 5% 50V	
	C 653	QER41AM-107	E CAPACITOR	100MF 20% 10V	
	C 654	NCB21HK-103AY	C CAPACITOR	.010MF 10% 50V	
	C 655	NCT21CH-101AY	C CAPACITOR	100PF +50:-10%	
	C 656	QEKF1AM-107ZN	E CAPACITOR	100MF 20% 10V	
	C 657	NCB21HK-103AY	C CAPACITOR	.010MF 10% 50V	
	C 658	NCS21HJ-101AY	C CAPACITOR	100PF 5% 50V	
	C 661	QEKF1AM-107ZN	E CAPACITOR	100MF 20% 10V	
	C 662	NCB21HK-103AY	C CAPACITOR	.010MF 10% 50V	
	C 663	NCS21HJ-101AY	C CAPACITOR	100PF 5% 50V	
	C 681	NCS21HJ-101AY	C CAPACITOR	100PF 5% 50V	
	C 682	NCS21HJ-101AY	C CAPACITOR	100PF 5% 50V	
	C 684	QERF1AM-476ZN	E CAPACITOR	47MF 20% 10V	

BLOCK NO. 01

⚠	REF.	PARTS NO.	PARTS NAME	REMARKS	SUFFIX
	C 685	QEK41CM-476	E CAPACITOR	47MF 20% 16V	
	C 694	NCB21HK-333AY	C CAPACITOR	.033MF 10% 50V	
	C 701	QEK41CM-476	E CAPACITOR	47MF 20% 16V	
	C 702	QEKF1AM-107ZN	E CAPACITOR	100MF 20% 10V	
	C 703	QEKF1AM-107ZN	E CAPACITOR	100MF 20% 10V	
	C 704	NCB21HK-103AY	C CAPACITOR	.010MF 10% 50V	
	C 705	QETA1CM-227	E CAPACITOR	220MF 20% 16V	
	C 707	QETC1AM-477ZN	E CAPACITOR	470MF 20% 10V	
	C 708	NCB21HK-103AY	C CAPACITOR	.010MF 10% 50V	
	C 721	QEKF1CM-107ZN	E CAPACITOR	100MF 20% 16V	
	C 722	NCB21HK-103AY	C CAPACITOR	.010MF 10% 50V	
	C 723	QEK41CM-476	E CAPACITOR	47MF 20% 16V	
	C 724	VCE040J-228Z	E CAPACITOR		
	C 801	QERFOJM-476ZN	E CAPACITOR	47MF 20% 6.3V	
	C 802	NCB21HK-223AY	C CAPACITOR	.022MF 10% 50V	
	C 805	NCB21HK-223AY	C CAPACITOR	.022MF 10% 50V	
	C 811	QEK41HM-105	E CAPACITOR	1.0MF 20% 50V	
	C 812	NCB21HK-272AY	C CAPACITOR	2700PF 10% 50V	
	C 813	QEK41HM-105	E CAPACITOR	1.0MF 20% 50V	
	C 814	QEK41HM-224	E CAPACITOR	.22MF 20% 50V	
	C 815	QEK41HM-225	E CAPACITOR	2.2MF 20% 50V	
	C 816	QEK41CM-476	E CAPACITOR	47MF 20% 16V	
	C 821	NCB21HK-223AY	C CAPACITOR	.022MF 10% 50V	
	C 831	QER41HM-225	E CAPACITOR	2.2MF 20% 50V	
	C 832	NCT21CH-331AY	C.CAPACITOR	330PF +50:-10%	
	C 833	NCB21HK-223AY	C CAPACITOR	.022MF 10% 50V	
	C 834	NCS21HJ-561AY	C CAPACITOR	560PF 5% 50V	
	C 836	NCT21CH-470AY	C CAPACITOR	47PF +50:-10% 1	
	C 837	NCT21CH-820AY	C CAPACITOR	82PF +50:-10% 1	
	C 838	QER41CM-106M	E CAPACITOR	10MF 20% 16V	
	C 841	NCB21HK-223AY	C CAPACITOR	.022MF 10% 50V	
	C 842	NCT21CH-150AY	C CAPACITOR	15PF +50:-10% 1	
	C 843	NCT21CH-220AY	C CAPACITOR	22PF +50:-10% 1	
	C 844	QEK41HM-225	E CAPACITOR	2.2MF 20% 50V	
	C 845	NCB21HK-681AY	C CAPACITOR	680PF 10% 50V	
	C 846	QEK41HM-225	E CAPACITOR	2.2MF 20% 50V	
	C 847	NCB21HK-102AY	C CAPACITOR	1000PF 10% 50V	
	C 848	QETA1AM-477N	E CAPACITOR	470MF 20% 10V	
	C 849	NCS21HJ-471AY	C CAPACITOR	470PF 5% 50V	
	C 851	NCB21EK-104AY	C CAPACITOR	.10MF 10% 25V	
	C 852	NCB21EK-104AY	C CAPACITOR	.10MF 10% 25V	
	C 853	NCB21HK-103AY	C CAPACITOR	.010MF 10% 50V	
	C 861	QEK41CM-106	E CAPACITOR	10MF 20% 16V	
	C 862	QERFOJM-476ZN	E CAPACITOR	47MF 20% 6.3V	
	C 863	NCB21HK-152AY	C CAPACITOR	1500PF 10% 50V	
	C 911	NCB21HK-103AY	C CAPACITOR	.010MF 10% 50V	
	C 912	NCB21EK-473AY	C CAPACITOR	.047MF 10% 25V	
	C 913	QER40JM-226	E CAPACITOR	22MF 20% 6.3V	
	C 914	NCB21HK-223AY	C CAPACITOR	.022MF 10% 50V	
	C 921	QEK41CM-476	E CAPACITOR	47MF 20% 16V	
	C 922	QEKF1AM-107ZN	E CAPACITOR	100MF 20% 10V	
	C 923	NCB21HK-103AY	C CAPACITOR	.010MF 10% 50V	
	C 924	QEKF1AM-107ZN	E CAPACITOR	100MF 20% 10V	
	C 925	QEK41HM-225	E CAPACITOR	2.2MF 20% 50V	
	C 926	NCB21EK-104AY	C CAPACITOR	.10MF 10% 25V	

BLOCK NO. 01

⚠	REF.	PARTS NO.	PARTS NAME	REMARKS	SUFFIX
	C 927	NCB21HK-223AY	C CAPACITOR	.022MF 10% 50V	
	C 928	QEK41CM-476	E CAPACITOR	47MF 20% 16V	
	C 929	NCB21HK-183AY	C CAPACITOR	.018MF 10% 50V	
	C 930	NCB21EK-104AY	C CAPACITOR	.10MF 10% 25V	
	C 931	NCB21HK-393AY	C CAPACITOR	.039MF 10% 50V	
	C 932	QEK41HM-105	E CAPACITOR	1.0MF 20% 50V	
	C 933	NCB21HK-103AY	C CAPACITOR	.010MF 10% 50V	
	C 934	NCB21EK-104AY	C CAPACITOR	.10MF 10% 25V	
	C 935	QEK41CM-106	E CAPACITOR	10MF 20% 16V	
	C 951	QEK41CM-476	E CAPACITOR	47MF 20% 16V	
	C 961	QEK41HM-225	E CAPACITOR	2.2MF 20% 50V	
	C 962	QEK41CM-106	E CAPACITOR	10MF 20% 16V	
	C 963	NCS21HJ-101AY	C CAPACITOR	100PF 5% 50V	
	C 964	QETC1CM-477ZN	E CAPACITOR	470MF 20% 16V	
	C 965	QEK41CM-106	E CAPACITOR	10MF 20% 16V	
	C 966	NCS21HJ-101AY	C CAPACITOR	100PF 5% 50V	
	C 967	NCB21HK-152AY	C CAPACITOR	1500PF 10% 50V	
	C 968	NCB21HK-152AY	C CAPACITOR	1500PF 10% 50V	
	C 997	NCB21HK-223AY	C CAPACITOR	.022MF 10% 50V	
	CF 1	VCF2S3B-102	C FILTER		
	CF 2	VCF2M3B-104	C FILTER		
	CF 3	CSB456F23	CERA LOCK		
	CF801	EFO-GC8004T4	CERAMIC RESONAT		
	CF821	EFO-EC4004T4	CERA LOCK		
	CJ781	VMC0232-S16	CONNECTOR		
	CN501	VMC0224-012N	FPC CONNECTOR		
	CN991	VGZ0007-030	FEED THU CAP		
	CN992	VMZ0015-002	POST PIN		
	CN993	VMC0063-004	CONNECTOR		
	D 1	DCC010	SI DIODE		
	D 2	DCC010	SI DIODE		
	D 311	HSM2838C	DIODE		
	D 411	HSM2838C	DIODE		
	D 601	HSM2836C	DIODE		
	D 602	HSM2836C	DIODE		
	D 621	HSM2836C	DIODE		
	D 622	HSM2838C	DIODE		
	D 631	HSM2836C	DIODE		
	D 681	MA3051(M)	ZENER DIODE		
	D 701	MA3110(M)	ZENER DIODE		
	D 702	MA3091(M)	ZENER DIODE		
	D 704	DSK10C-E	DIODE		
	D 711	DSK10C-E	DIODE		
	D 721	HSM2836C	DIODE		
	D 722	DSK10C-E	DIODE		
	D 723	DSK10C-E	DIODE		
	D 724	HSM2838C	DIODE		
	D 725	MA3062(H)	Z DIODE		
	D 841	HSM2838C	DIODE		
	D 861	HSM2838C	DIODE		
	D 921	MA716X	S B DIODE X2		
	D 951	HSM2836C	DIODE		
	D 952	HSM2838C	DIODE		
	D 953	MA3110(M)	ZENER DIODE		
	D 961	HSM2836C	DIODE		

BLOCK NO. 01

⚠	REF.	PARTS NO.	PARTS NAME	REMARKS	SUFFIX
	IC 1	LA1862M	IC	FM IF/DET	
	IC153	M5218AFP	IC	BUFF	
	IC501	TA8191F	IC	DIGITAL RF AMP	
	IC561	TC9236AF	IC	DATA/SARVO PROS	
	IC581	BA6296FP	IC	FEED/FOUCUS	
	IC601	UPD75517GF-233	IC	CPU(SYSTEM)	
	IC631	PST529G	IC	RESET	
	IC651	SM5871AS	IC	D/A CONVERTER	
	IC652	SC7S04F-W	IC	VCC CONT.	
	IC801	UPD78013GC-573	IC	CPU (TUNER)	
	IC802	HD74HC573FP	IC	S-RAM	
	IC803	LC3517BML-15	IC	S-RAM	
	IC811	LA2000S	IC		
	IC821	LC7073M	IC	RDS PROSSESSOR	
	IC831	SAA6579T	IC	RDS DETECTOR	
	IC841	LC72140MHS	IC	PLL	
	IC901	M5218AFP	IC		
	IC911	M5218AFP	IC		
	IC921	TEA6320T	IC		
	IC922	M5218AFP	IC		
	IC923	M5218AFP	IC		
	IC961	HA13151	IC		
	L 1	VQP1002-4R7Y	INDUCTOR		
	L 2	VQT7F07-504	IFT		
	L 501	VQP0015-4R7Z	INDUCTOR		
	L 561	VQP0015-4R7Z	INDUCTOR		
	L 562	NRS181J-0RONY	MG RESISTOR	5% 1/8W	
	L 601	VQP0015-470Z	INDUCTOR		
	L 801	VQP0015-470Z	INDUCTOR		
	L 821	VQP0015-101Z	INDUCTOR		
	L 841	NRS181J-100NY	MG RESISTOR	10 5% 1/8W	
	L 842	VQP1002-100Y	INDUCTOR		
	Q 1	2SC2814(F4F5)HL	TRANSISTOR		
	Q 311	2SD601A(R)	TRANSISTOR		
	Q 352	2SD601A(R)	TRANSISTOR		
	Q 411	2SD601A(R)	TRANSISTOR		
	Q 452	2SD601A(R)	TRANSISTOR		
	Q 501	2SB709A(Q)	TRANSISTOR		
	Q 581	2SB1322(RS)	TRANSISTOR		
	Q 591	2SB709A(Q)	TRANSISTOR		
	Q 601	2SD601A(R)	TRANSISTOR		
	Q 602	2SD601A(R)	TRANSISTOR		
	Q 603	2SD601A(R)	TRANSISTOR		
	Q 604	2SD601A(R)	TRANSISTOR		
	Q 621	UN2111	TRANSISTOR		
	Q 622	2SB709A(Q)	TRANSISTOR		
	Q 651	UN2211	TRANSISTOR		
	Q 681	UN2111	TRANSISTOR		
	Q 682	UN2111	TRANSISTOR		
	Q 683	2SD601A(R)	TRANSISTOR		
	Q 684	2SD601A(R)	TRANSISTOR		
	Q 685	2SA1362GR	TRANSISTOR		
	Q 686	2SA1362GR	TRANSISTOR		
	Q 687	2SD1935(7.8)	TRANSISTOR		
	Q 688	2SD1935(7.8)	TRANSISTOR		

BLOCK NO. 01

⚠	REF.	PARTS NO.	PARTS NAME	REMARKS	SUFFIX
	Q 689	2SD1994(R,S)	TRANRISTOR		
	Q 701	2SD1994(R,S)	TRANRISTOR		
	Q 702	2SB1322(RS)	TRANSISTOR		
	Q 703	2SD1994(R,S)	TRANRISTOR		
	Q 704	2SB941(P,Q)	TRANSISTOR		
	Q 705	UN2211	TRANSISTOR		
	Q 711	UN2111	TRANSISTOR		
	Q 712	2SD601A(R)	TRANSISTOR		
	Q 721	2SD1266(P,Q)	TRANSISTOR		
	Q 722	2SB709A(Q)	TRANSISTOR		
	Q 723	2SD601A(R)	TRANSISTOR		
	Q 724	2SB709A(Q)	TRANSISTOR		
	Q 841	2SD601A(R)	TRANSISTOR		
	Q 842	2SD601A(R)	TRANSISTOR		
	Q 843	2SD601A(R)	TRANSISTOR		
	Q 851	2SA1362GR	TRANSISTOR		
	Q 852	2SB709A(Q)	TRANSISTOR		
	Q 862	UN2213	TRANSISTOR		
	Q 863	2SD601A(R)	TRANSISTOR		
	Q 864	2SD601A(R)	TRANSISTOR		
	Q 865	UN2111	TRANSISTOR		
	Q 866	2SD601A(R)	TRANSISTOR		
	Q 867	UN2111	TRANSISTOR		
	Q 921	2SD601A(R)	TRANSISTOR		
	Q 922	UN2211	TRANSISTOR		
	Q 923	2SD601A(R)	TRANSISTOR		
	Q 924	2SD601A(R)	TRANSISTOR		
	Q 925	2SD601A(R)	TRANSISTOR		
	Q 951	UN2111	TRANSISTOR		
	Q 961	UN2211	TRANSISTOR		
	R 1	NRSA02J-100NY	MG RESISTOR	10 5% 1/10W	
	R 2	NRSA02J-102NY	MG RESISTOR	1.0K 5% 1/10W	
	R 3	NRSA02J-102NY	MG RESISTOR	1.0K 5% 1/10W	
	R 4	NRSA02J-101NY	MG RESISTOR	100 5% 1/10W	
	R 5	NRSA02J-391NY	MG RESISTOR	390 5% 1/10W	
	R 6	NRSA02J-223NY	MG RESISTOR	22K 5% 1/10W	
	R 7	NRSA02J-103NY	MG RESISTOR	10K 5% 1/10W	
	R 8	NRSA02J-331NY	MG RESISTOR	330 5% 1/10W	
	R 9	NRSA02J-182NY	MG RESISTOR	1.8K 5% 1/10W	
	R 10	NRSA02J-221NY	MG RESISTOR	220 5% 1/10W	
	R 11	NRSA02J-331NY	MG RESISTOR	330 5% 1/10W	
	R 12	NRSA02J-392NY	MG RESISTOR	3.9K 5% 1/10W	
	R 13	NRSA02J-123NY	MG RESISTOR	12K 5% 1/10W	
	R 14	NRSA02J-203NY	MG REGISTOR	20K 5% 1/10W	
	R 15	NRSA02J-562NY	MG RESISTOR	5.6K 5% 1/10W	
	R 16	NRSA02J-223NY	MG RESISTOR	22K 5% 1/10W	
	R 17	NRSA02J-562NY	MG RESISTOR	5.6K 5% 1/10W	
	R 18	NRSA02J-472NY	MG RESISTOR	4.7K 5% 1/10W	
	R 19	NRSA02J-562NY	MG RESISTOR	5.6K 5% 1/10W	
	R 20	NRSA02J-683NY	MG RESISTOR	68K 5% 1/10W	
	R 21	NRSA02J-473NY	MG RESISTOR	47K 5% 1/10W	
	R 22	NRSA02J-682NY	MG RESISTOR	6.8K 5% 1/10W	
	R 23	NRSA02J-752NY	MG RESISTOR	7.5K 5% 1/10W	
	R 24	NRSA02J-682NY	MG RESISTOR	6.8K 5% 1/10W	
	R 25	NRSA02J-103NY	MG RESISTOR	10K 5% 1/10W	

BLOCK NO. 01

⚠	REF.	PARTS NO.	PARTS NAME	REMARKS	SUFFIX
	R 26	NRSA02J-273NY	MG RESISTOR	27K 5% 1/10W	
	R 27	NRSA02J-100NY	MG RESISTOR	10 5% 1/10W	
	R 28	NRSA02J-0RONY	MG RESISTOR	5% 1/10W	
	R 51	NRSA02J-683NY	MG RESISTOR	68K 5% 1/10W	
	R 52	NRSA02J-153NY	MG RESISTOR	15K 5% 1/10W	
	R 161	NRSA02J-752NY	MG RESISTOR	7.5K 5% 1/10W	
	R 162	NRSA02J-752NY	MG RESISTOR	7.5K 5% 1/10W	
	R 163	NRSA02J-153NY	MG RESISTOR	15K 5% 1/10W	
	R 164	NRSA02J-153NY	MG RESISTOR	15K 5% 1/10W	
	R 165	NRSA02J-223NY	MG RESISTOR	22K 5% 1/10W	
	R 166	NRSA02J-223NY	MG RESISTOR	22K 5% 1/10W	
	R 261	NRSA02J-752NY	MG RESISTOR	7.5K 5% 1/10W	
	R 262	NRSA02J-752NY	MG RESISTOR	7.5K 5% 1/10W	
	R 263	NRSA02J-153NY	MG RESISTOR	15K 5% 1/10W	
	R 264	NRSA02J-153NY	MG RESISTOR	15K 5% 1/10W	
	R 265	NRSA02J-223NY	MG RESISTOR	22K 5% 1/10W	
	R 266	NRSA02J-223NY	MG RESISTOR	22K 5% 1/10W	
	R 301	NRSA02J-562NY	MG RESISTOR	5.6K 5% 1/10W	
	R 302	NRSA02J-223NY	MG RESISTOR	22K 5% 1/10W	
	R 303	NRSA02J-273NY	MG RESISTOR	27K 5% 1/10W	
	R 304	NRSA02J-682NY	MG RESISTOR	6.8K 5% 1/10W	
	R 305	NRSA02J-822NY	MG RESISTOR	8.2K 5% 1/10W	
	R 311	NRSA02J-472NY	MG RESISTOR	4.7K 5% 1/10W	
	R 312	NRSA02J-104NY	MG RESISTOR	100K 5% 1/10W	
	R 314	NRSA02J-154NY	MG RESISTOR	150K 5% 1/10W	
	R 315	NRSA02J-104NY	MG RESISTOR	100K 5% 1/10W	
	R 316	NRSA02J-392NY	MG RESISTOR	3.9K 5% 1/10W	
	R 317	NRSA02J-223NY	MG RESISTOR	22K 5% 1/10W	
	R 318	NRSA02J-822NY	MG RESISTOR	8.2K 5% 1/10W	
	R 319	NRSA02J-473NY	MG RESISTOR	47K 5% 1/10W	
	R 321	NRSA02J-223NY	MG RESISTOR	22K 5% 1/10W	
	R 322	NRSA02J-223NY	MG RESISTOR	22K 5% 1/10W	
	R 323	NRSA02J-562NY	MG RESISTOR	5.6K 5% 1/10W	
	R 324	NRSA02J-683NY	MG RESISTOR	68K 5% 1/10W	
	R 326	NRSA02J-223NY	MG RESISTOR	22K 5% 1/10W	
	R 327	NRSA02J-223NY	MG RESISTOR	22K 5% 1/10W	
	R 351	NRSA02J-223NY	MG RESISTOR	22K 5% 1/10W	
	R 352	NRSA02J-102NY	MG RESISTOR	1.0K 5% 1/10W	
	R 353	NRSA02J-101NY	MG RESISTOR	100 5% 1/10W	
	R 354	NRSA02J-103NY	MG RESISTOR	10K 5% 1/10W	
	R 355	NRSA02J-472NY	MG RESISTOR	4.7K 5% 1/10W	
	R 356	NRSA02J-223NY	MG RESISTOR	22K 5% 1/10W	
	R 361	NRSA02J-103NY	MG RESISTOR	10K 5% 1/10W	
	R 363	NRSA02J-103NY	MG RESISTOR	10K 5% 1/10W	
	R 365	NRSA02J-2R2NYM	MG RESISTOR	2.2 5% 1/10W	
	R 366	NRSA02J-2R2NYM	MG RESISTOR	2.2 5% 1/10W	
	R 367	NRSA02J-2R2NYM	MG RESISTOR	2.2 5% 1/10W	
	R 368	NRSA02J-2R2NYM	MG RESISTOR	2.2 5% 1/10W	
	R 401	NRSA02J-562NY	MG RESISTOR	5.6K 5% 1/10W	
	R 402	NRSA02J-223NY	MG RESISTOR	22K 5% 1/10W	
	R 403	NRSA02J-273NY	MG RESISTOR	27K 5% 1/10W	
	R 404	NRSA02J-682NY	MG RESISTOR	6.8K 5% 1/10W	
	R 405	NRSA02J-822NY	MG RESISTOR	8.2K 5% 1/10W	
	R 411	NRSA02J-472NY	MG RESISTOR	4.7K 5% 1/10W	
	R 412	NRSA02J-104NY	MG RESISTOR	100K 5% 1/10W	

BLOCK NO. 01

⚠	REF.	PARTS NO.	PARTS NAME	REMARKS	SUFFIX
	R 414	NRSA02J-154NY	MG RESISTOR	150K 5% 1/10W	
	R 415	NRSA02J-104NY	MG RESISTOR	100K 5% 1/10W	
	R 416	NRSA02J-392NY	MG RESISTOR	3.9K 5% 1/10W	
	R 417	NRSA02J-223NY	MG RESISTOR	22K 5% 1/10W	
	R 418	NRSA02J-822NY	MG RESISTOR	8.2K 5% 1/10W	
	R 419	NRSA02J-473NY	MG RESISTOR	47K 5% 1/10W	
	R 421	NRSA02J-223NY	MG RESISTOR	22K 5% 1/10W	
	R 422	NRSA02J-223NY	MG RESISTOR	22K 5% 1/10W	
	R 423	NRSA02J-562NY	MG RESISTOR	5.6K 5% 1/10W	
	R 424	NRSA02J-683NY	MG RESISTOR	68K 5% 1/10W	
	R 426	NRSA02J-223NY	MG RESISTOR	22K 5% 1/10W	
	R 427	NRSA02J-223NY	MG RESISTOR	22K 5% 1/10W	
	R 451	NRSA02J-223NY	MG RESISTOR	22K 5% 1/10W	
	R 452	NRSA02J-102NY	MG RESISTOR	1.0K 5% 1/10W	
	R 453	NRSA02J-101NY	MG RESISTOR	100 5% 1/10W	
	R 454	NRSA02J-103NY	MG RESISTOR	10K 5% 1/10W	
	R 455	NRSA02J-472NY	MG RESISTOR	4.7K 5% 1/10W	
	R 456	NRSA02J-223NY	MG RESISTOR	22K 5% 1/10W	
	R 461	NRSA02J-103NY	MG RESISTOR	10K 5% 1/10W	
	R 463	NRSA02J-103NY	MG RESISTOR	10K 5% 1/10W	
	R 465	NRSA02J-2R2NYM	MG RESISTOR	2.2 5% 1/10W	
	R 466	NRSA02J-2R2NYM	MG RESISTOR	2.2 5% 1/10W	
	R 467	NRSA02J-2R2NYM	MG RESISTOR	2.2 5% 1/10W	
	R 468	NRSA02J-2R2NYM	MG RESISTOR	2.2 5% 1/10W	
	R 501	NRSA02J-154NY	MG RESISTOR	150K 5% 1/10W	
	R 502	NRSA02J-103NY	MG RESISTOR	10K 5% 1/10W	
	R 503	NRSA02J-470NY	MG RESISTOR	47 5% 1/10W	
	R 504	NRSA02J-222NY	MG RESISTOR	2.2K 5% 1/10W	
	R 505	NRSA02J-470NY	MG RESISTOR	47 5% 1/10W	
	R 511	NRSA02J-103NY	MG RESISTOR	10K 5% 1/10W	
	R 512	NRSA02J-272NY	MG RESISTOR	2.7K 5% 1/10W	
	R 513	NRSA02J-152NY	MG RESISTOR	1.5K 5% 1/10W	
	R 514	NRSA02J-472NY	MG RESISTOR	4.7K 5% 1/10W	
	R 515	NRSA02J-103NY	MG RESISTOR	10K 5% 1/10W	
	R 516	NRSA02J-103NY	MG RESISTOR	10K 5% 1/10W	
	R 517	NRSA02J-202NY	MG RESISTOR	2.0K 5% 1/10W	
	R 521	NRSA02J-683NY	MG RESISTOR	68K 5% 1/10W	
	R 522	NRSA02J-103NY	MG RESISTOR	10K 5% 1/10W	
	R 523	NRSA02J-221NY	MG RESISTOR	220 5% 1/10W	
	R 524	NRSA02J-332NY	MG RESISTOR	3.3K 5% 1/10W	
	R 525	NRSA02J-103NY	MG RESISTOR	10K 5% 1/10W	
	R 526	NRSA02J-153NY	MG RESISTOR	15K 5% 1/10W	
	R 531	NRSA02J-473NY	MG RESISTOR	47K 5% 1/10W	
	R 532	NRSA02J-104NY	MG RESISTOR	100K 5% 1/10W	
	R 533	NRSA02J-123NY	MG RESISTOR	12K 5% 1/10W	
	R 534	NRSA02J-683NY	MG RESISTOR	68K 5% 1/10W	
	R 541	NRSA02J-273NY	MG RESISTOR	27K 5% 1/10W	
	R 542	NRSA02J-103NY	MG RESISTOR	10K 5% 1/10W	
	R 543	NRSA02J-473NY	MG RESISTOR	47K 5% 1/10W	
	R 544	NRSA02J-223NY	MG RESISTOR	22K 5% 1/10W	
	R 546	NRSA02J-103NY	MG RESISTOR	10K 5% 1/10W	
	R 547	NRSA02J-473NY	MG RESISTOR	47K 5% 1/10W	
	R 548	NRSA02J-153NY	MG RESISTOR	15K 5% 1/10W	
	R 549	NRSA02J-821NY	MG RESISTOR	820 5% 1/10W	
	R 550	NRSA02J-104NY	MG RESISTOR	100K 5% 1/10W	

BLOCK NO. 01

⚠	REF.	PARTS NO.	PARTS NAME	REMARKS	SUFFIX
	R 551	NRSA02J-223NY	MG RESISTOR	22K 5% 1/10W	
	R 552	NRSA02J-822NY	MG RESISTOR	8.2K 5% 1/10W	
	R 553	NRSA02J-821NY	MG RESISTOR	820 5% 1/10W	
	R 555	NRSA02J-225NY	MG RESISTOR	2.2M 5% 1/10W	
	R 556	NRSA02J-564NY	MG RESISTOR	560K 5% 1/10W	
	R 561	NRSA02J-102NY	MG RESISTOR	1.0K 5% 1/10W	
	R 562	NRSA02J-103NY	MG RESISTOR	10K 5% 1/10W	
	R 563	NRSA02J-224NY	MG RESISTOR	220K 5% 1/10W	
	R 564	NRSA02J-473NY	MG RESISTOR	47K 5% 1/10W	
	R 565	NRSA02J-225NY	MG RESISTOR	2.2M 5% 1/10W	
	R 566	NRSA02J-333NY	MG RESISTOR	33K 5% 1/10W	
	R 567	NRSA02J-103NY	MG RESISTOR	10K 5% 1/10W	
	R 568	NRSA02J-103NY	MG RESISTOR	10K 5% 1/10W	
	R 581	NRSA02J-332NY	MG RESISTOR	3.3K 5% 1/10W	
	R 582	NRSA02J-332NY	MG RESISTOR	3.3K 5% 1/10W	
	R 583	NRSA02J-472NY	MG RESISTOR	4.7K 5% 1/10W	
	R 584	NRSA02J-222NY	MG RESISTOR	2.2K 5% 1/10W	
	R 585	NRSA02J-102NY	MG RESISTOR	1.0K 5% 1/10W	
	R 586	NRSA02J-472NY	MG RESISTOR	4.7K 5% 1/10W	
	R 587	NRSA02J-683NY	MG RESISTOR	68K 5% 1/10W	
	R 588	NRSA02J-153NY	MG RESISTOR	15K 5% 1/10W	
	R 589	NRSA02J-392NY	MG RESISTOR	3.9K 5% 1/10W	
	R 590	NRSA02J-273NY	MG RESISTOR	27K 5% 1/10W	
	R 601	NRSA02J-104NY	MG RESISTOR	100K 5% 1/10W	
	R 602	NRSA02J-473NY	MG RESISTOR	47K 5% 1/10W	
	R 603	NRSA02J-473NY	MG RESISTOR	47K 5% 1/10W	
	R 604	NRSA02J-472NY	MG RESISTOR	4.7K 5% 1/10W	
	R 605	NRSA02J-222NY	MG RESISTOR	2.2K 5% 1/10W	
	R 606	NRSA02J-222NY	MG RESISTOR	2.2K 5% 1/10W	
	R 607	NRSA02J-222NY	MG RESISTOR	2.2K 5% 1/10W	
	R 608	NRSA02J-472NY	MG RESISTOR	4.7K 5% 1/10W	
	R 609	NRSA02J-472NY	MG RESISTOR	4.7K 5% 1/10W	
	R 610	NRSA02J-472NY	MG RESISTOR	4.7K 5% 1/10W	
	R 611	NRSA02J-472NY	MG RESISTOR	4.7K 5% 1/10W	
	R 612	NRSA02J-331NY	MG RESISTOR	330 5% 1/10W	
	R 613	NRSA02J-331NY	MG RESISTOR	330 5% 1/10W	
	R 617	NRSA02J-222NY	MG RESISTOR	2.2K 5% 1/10W	
	R 621	NRSA02J-154NY	MG RESISTOR	150K 5% 1/10W	
	R 626	NRSA02J-101NY	MG RESISTOR	100 5% 1/10W	
	R 627	NRSA02J-103NY	MG RESISTOR	10K 5% 1/10W	
	R 628	NRSA02J-103NY	MG RESISTOR	10K 5% 1/10W	
	R 631	NRSA02J-473NY	MG RESISTOR	47K 5% 1/10W	
	R 632	NRSA02J-222NY	MG RESISTOR	2.2K 5% 1/10W	
	R 651	NRSA02J-221NY	MG RESISTOR	220 5% 1/10W	
	R 652	NRSA02J-100NY	MG RESISTOR	10 5% 1/10W	
	R 654	NRSA02J-102NY	MG RESISTOR	1.0K 5% 1/10W	
	R 656	NRSA02J-100NY	MG RESISTOR	10 5% 1/10W	
	R 681	NRSA02J-331NY	MG RESISTOR	330 5% 1/10W	
	R 682	NRSA02J-331NY	MG RESISTOR	330 5% 1/10W	
	R 683	NRSA02J-331NY	MG RESISTOR	330 5% 1/10W	
	R 684	NRSA02J-331NY	MG RESISTOR	330 5% 1/10W	
	R 685	NRSA02J-471NY	MG RESISTOR	470 5% 1/10W	
	R 701	NRSA02J-102NY	MG RESISTOR	1.0K 5% 1/10W	
	R 702	NRSA02J-472NY	MG RESISTOR	4.7K 5% 1/10W	
	R 703	NRS181J-471NY	MG RESISTOR	470 5% 1/8W	

BLOCK NO. 01

⚠	REF.	PARTS NO.	PARTS NAME	REMARKS	SUFFIX
	R 704	NRSA02J-471NY	MG RESISTOR	470 5% 1/10W	
	R 705	NRSA02J-100NY	MG RESISTOR	10 5% 1/10W	
	R 706	QRX019J-R47A	MF RESISTOR	5% 1/1W	
	R 711	NRSA02J-222NY	MG RESISTOR	2.2K 5% 1/10W	
	R 712	NRSA02J-473NY	MG RESISTOR	47K 5% 1/10W	
	R 721	QRX01DJ-R47X	MF RESISTOR	5% 1/1W	
	R 724	NRSA02J-562NY	MG RESISTOR	5.6K 5% 1/10W	
	R 725	NRSA02J-103NY	MG RESISTOR	10K 5% 1/10W	
	R 726	NRSA02J-473NY	MG RESISTOR	47K 5% 1/10W	
	R 727	NRSA02J-473NY	MG RESISTOR	47K 5% 1/10W	
	R 728	NRSA02J-222NY	MG RESISTOR	2.2K 5% 1/10W	
	R 729	NRSA02J-222NY	MG RESISTOR	2.2K 5% 1/10W	
	R 730	NRSA02J-392NY	MG RESISTOR	3.9K 5% 1/10W	
	R 731	NRSA02J-103NY	MG RESISTOR	10K 5% 1/10W	
	R 801	NRSA02J-101NY	MG RESISTOR	100 5% 1/10W	
	R 802	NRSA02J-222NY	MG RESISTOR	2.2K 5% 1/10W	
	R 803	NRSA02J-332NY	MG RESISTOR	3.3K 5% 1/10W	
	R 804	NRSA02J-222NY	MG RESISTOR	2.2K 5% 1/10W	
	R 805	NRSA02J-473NY	MG RESISTOR	47K 5% 1/10W	
	R 806	NRSA02J-154NY	MG RESISTOR	150K 5% 1/10W	
	R 807	NRSA02J-472NY	MG RESISTOR	4.7K 5% 1/10W	
	R 808	NRSA02J-223NY	MG RESISTOR	22K 5% 1/10W	
	R 809	NRSA02J-223NY	MG RESISTOR	22K 5% 1/10W	
	R 811	NRSA02J-104NY	MG RESISTOR	100K 5% 1/10W	
	R 812	NRSA02J-473NY	MG RESISTOR	47K 5% 1/10W	
	R 813	NRSA02J-154NY	MG RESISTOR	150K 5% 1/10W	
	R 814	NRSA02J-473NY	MG RESISTOR	47K 5% 1/10W	
	R 815	NRSA02J-101NY	MG RESISTOR	100 5% 1/10W	
	R 821	NRSA02J-472NY	MG RESISTOR	4.7K 5% 1/10W	
	R 831	NRSA02J-222NY	MG RESISTOR	2.2K 5% 1/10W	
	R 841	NRSA02J-222NY	MG RESISTOR	2.2K 5% 1/10W	
	R 842	NRSA02J-222NY	MG RESISTOR	2.2K 5% 1/10W	
	R 843	NRSA02J-222NY	MG RESISTOR	2.2K 5% 1/10W	
	R 844	NRSA02J-222NY	MG RESISTOR	2.2K 5% 1/10W	
	R 845	NRSA02J-681NY	MG RESISTOR	680 5% 1/10W	
	R 846	NRSA02J-472NY	MG RESISTOR	4.7K 5% 1/10W	
	R 847	NRSA02J-472NY	MG RESISTOR	4.7K 5% 1/10W	
	R 848	NRSA02J-681NY	MG RESISTOR	680 5% 1/10W	
	R 849	NRSA02J-152NY	MG RESISTOR	1.5K 5% 1/10W	
	R 850	NRSA02J-102NY	MG RESISTOR	1.0K 5% 1/10W	
	R 851	NRSA02J-332NY	MG RESISTOR	3.3K 5% 1/10W	
	R 852	NRSA02J-681NY	MG RESISTOR	680 5% 1/10W	
	R 853	NRSA02J-472NY	MG RESISTOR	4.7K 5% 1/10W	
	R 854	NRSA02J-472NY	MG RESISTOR	4.7K 5% 1/10W	
	R 855	NRSA02J-473NY	MG RESISTOR	47K 5% 1/10W	
	R 856	NRSA02J-332NY	MG RESISTOR	3.3K 5% 1/10W	
	R 857	NRSA02J-473NY	MG RESISTOR	47K 5% 1/10W	
	R 858	NRSA02J-332NY	MG RESISTOR	3.3K 5% 1/10W	
	R 862	NRSA02J-153NY	MG RESISTOR	15K 5% 1/10W	
	R 863	NRSA02J-223NY	MG RESISTOR	22K 5% 1/10W	
	R 864	NRSA02J-473NY	MG RESISTOR	47K 5% 1/10W	
	R 865	NRSA02J-473NY	MG RESISTOR	47K 5% 1/10W	
	R 866	NRSA02J-104NY	MG RESISTOR	100K 5% 1/10W	
	R 867	NRSA02J-472NY	MG RESISTOR	4.7K 5% 1/10W	
	R 868	NRSA02J-473NY	MG RESISTOR	47K 5% 1/10W	

BLOCK NO. 01

⚠	REF.	PARTS NO.	PARTS NAME	REMARKS	SUFFIX
	R 869	NRSA02J-473NY	MG RESISTOR	47K 5% 1/10W	
	R 870	NRSA02J-104NY	MG RESISTOR	100K 5% 1/10W	
	R 871	NRSA02J-332NY	MG RESISTOR	3.3K 5% 1/10W	
	R 872	NRSA02J-473NY	MG RESISTOR	47K 5% 1/10W	
	R 873	NRSA02J-473NY	MG RESISTOR	47K 5% 1/10W	
	R 911	NRSA02J-223NY	MG RESISTOR	22K 5% 1/10W	
	R 912	NRSA02J-223NY	MG RESISTOR	22K 5% 1/10W	
	R 921	NRSA02J-333NY	MG RESISTOR	33K 5% 1/10W	
	R 924	NRSA02J-223NY	MG RESISTOR	22K 5% 1/10W	
	R 925	NRSA02J-472NY	MG RESISTOR	4.7K 5% 1/10W	
	R 926	NRSA02J-223NY	MG RESISTOR	22K 5% 1/10W	
	R 927	NRSA02J-272NY	MG RESISTOR	2.7K 5% 1/10W	
	R 928	NRSA02J-334NY	MG RESISTOR	330K 5% 1/10W	
	R 929	NRSA02J-103NY	MG RESISTOR	10K 5% 1/10W	
	R 930	NRSA02J-472NY	MG RESISTOR	4.7K 5% 1/10W	
	R 931	NRSA02J-683NY	MG RESISTOR	68K 5% 1/10W	
	R 932	NRSA02J-332NY	MG RESISTOR	3.3K 5% 1/10W	
	R 933	NRSA02J-475NY	MG RESISTOR	4.7M 5% 1/10W	
	R 934	NRSA02J-475NY	MG RESISTOR	4.7M 5% 1/10W	
	R 935	NRSA02J-475NY	MG RESISTOR	4.7M 5% 1/10W	
	R 961	NRSA02J-472NY	MG RESISTOR	4.7K 5% 1/10W	
	R 962	NRSA02J-473NY	MG RESISTOR	47K 5% 1/10W	
	R 965	NRSA02J-471NY	MG RESISTOR	470 5% 1/10W	
	RA561	EXBV8VJ-472Y	NET.RESISTOR		
	RA562	EXBV8VJ-472Y	NET.RESISTOR		
	RA563	EXBV4VJ-472Y	NET.RESISTOR		
	RA601	EXBV8VJ-472Y	NET.RESISTOR		
	RA602	EXBV4VJ-472Y	NET.RESISTOR		
	RA603	EXBV4VJ-103Y	NET.RESISTOR		
	RA604	EXBV4VJ-333Y	NET.RESISTOR		
	RA605	EXBV4VJ-472Y	NET.RESISTOR		
	RA606	EXBV4VJ-103Y	NET.RESISTOR		
	RA681	EXBV4VJ-472Y	NET.RESISTOR		
	RA682	EXBV4VJ-103Y	NET.RESISTOR		
	RA683	EXBV4VJ-103Y	NET.RESISTOR		
	RA684	EXBV4VJ-103Y	NET.RESISTOR		
	RA685	EXBV4VJ-103Y	NET.RESISTOR		
	RY711	VSK1D12-118	RELAY		
	TU 1	VAF6S06-001	FRONTEND		
	VR 1	QVPA601-333	V RESISTOR		
	VR 2	QVPA601-503A	V RESISTOR		
	VR501	QVZ3523-104	V.RESISTOR		
	VR861	QVPA601-503A	V RESISTOR		
	VR862	QVPA601-503A	V RESISTOR		
	X 601	VCX5024-001	CRYSTAL		
	X 651	VCX5016-934V	CRYSTAL		
	X 831	VCX5057-001	CRYSTAL		
	X 841	VCX5025-001	CRYSTAL		

■ LCD/Key Switch Board

● Top Side

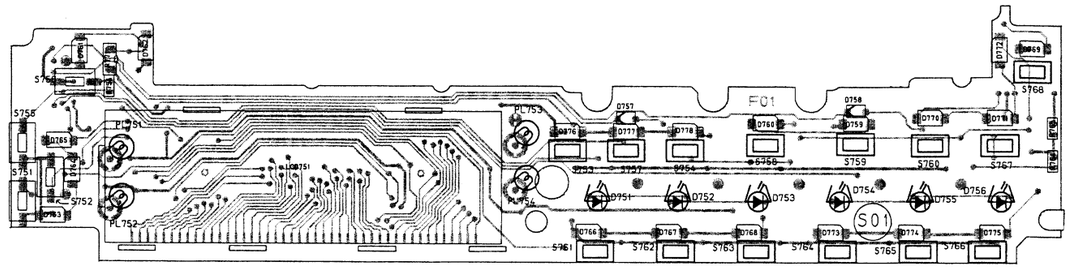

Fig. 7-3

● Bottom Side

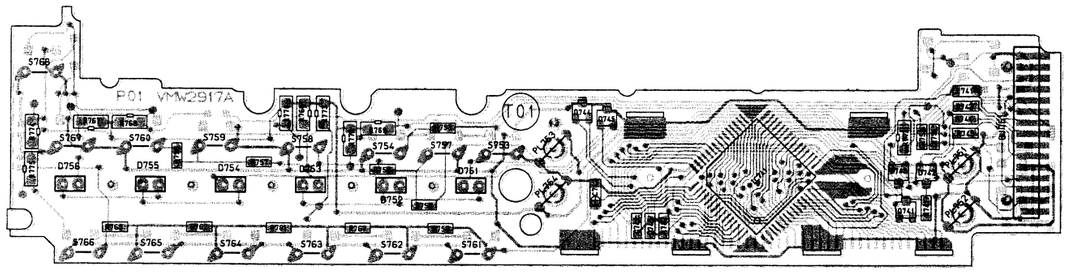

Fig. 7-4

■ Connect Board

● Top Side

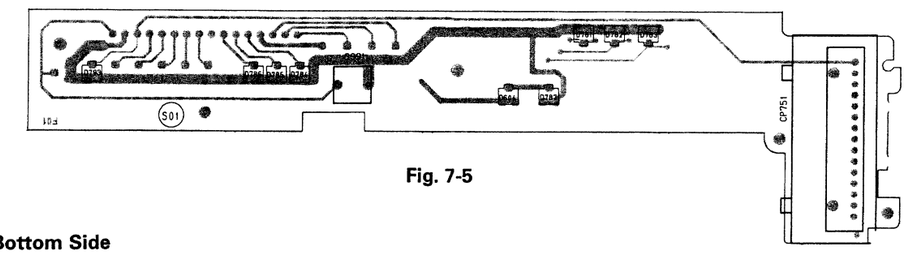

Fig. 7-5

● Bottom Side

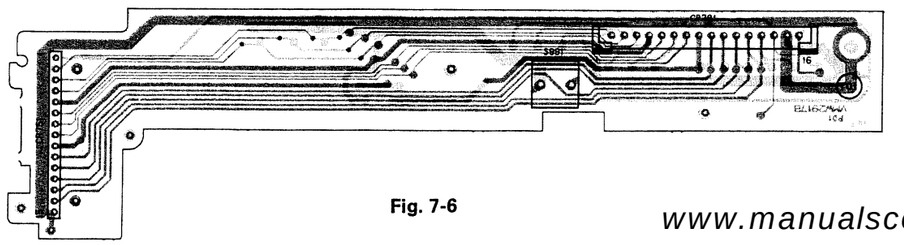

Fig. 7-6

• LCD/Key Switch and Connect Board Parts List

BLOCK NO. 02

⚠	REF.	PARTS NO.	PARTS NAME	REMARKS	SUFFIX
	R 742	NRSA02J-473NY	MG RESISTOR	47K 5% 1/10W	
	R 743	NRSA02J-103NY	MG RESISTOR	10K 5% 1/10W	
	R 744	NRSA02J-103NY	MG RESISTOR	10K 5% 1/10W	
	R 745	NRSA02J-103NY	MG RESISTOR	10K 5% 1/10W	
	R 751	NRSA02J-681NY	MG RESISTOR	680 5% 1/10W	
	R 752	NRSA02J-821NY	MG RESISTOR	820 5% 1/10W	
	R 753	NRSA02J-122NY	MG RESISTOR	1.2K 5% 1/10W	
	R 754	NRSA02J-681NY	MG RESISTOR	680 5% 1/10W	
	R 755	NRSA02J-821NY	MG RESISTOR	820 5% 1/10W	
	R 756	NRSA02J-122NY	MG RESISTOR	1.2K 5% 1/10W	
	R 757	NRSA02J-202NY	CARBON RESISTOR	2.0K 5% 1/10W	
	R 758	NRSA02J-332NY	MG RESISTOR	3.3K 5% 1/10W	
	R 759	NRSA02J-681NY	MG RESISTOR	680 5% 1/10W	
	R 760	NRSA02J-821NY	MG RESISTOR	820 5% 1/10W	
	R 761	NRSA02J-122NY	MG RESISTOR	1.2K 5% 1/10W	
	R 762	NRSA02J-202NY	CARBON RESISTOR	2.0K 5% 1/10W	
	R 763	NRSA02J-332NY	MG RESISTOR	3.3K 5% 1/10W	
	R 764	NRSA02J-622NY	MG RESISTOR	6.2K 5% 1/10W	
	R 765	NRSA02J-183NY	MG RESISTOR	18K 5% 1/10W	
	R 766	NRS18J-821NY	MG RESISTOR	820 5% 1/8W	
	R 767	NRS18J-821NY	MG RESISTOR	820 5% 1/8W	
	R 768	NRS18J-122NY	MG RESISTOR	1.2K 5% 1/8W	
	R 769	NRS18J-122NY	MG RESISTOR	1.2K 5% 1/8W	
	R 770	NRS18J-152NY	MG RESISTOR	1.5K 5% 1/8W	
	R 771	NRS18J-102NY	MG RESISTOR	1.0K 5% 1/8W	
	R 772	NRS18J-821NY	MG RESISTOR	820 5% 1/8W	
	R 773	NRS18J-821NY	MG RESISTOR	820 5% 1/8W	
	R 774	NRS18J-681NY	MG RESISTOR	680 5% 1/8W	
	R 775	NRS18J-821NY	MG RESISTOR	820 5% 1/8W	
	R 776	NRS18J-122NY	MG RESISTOR	1.2K 5% 1/8W	
	S 751	QSG4H11-V06Y	TACT SW	VOL DOWN	
	S 752	QSG4H11-V06Y	TACT SW	SELECT	
	S 753	QSG1B11-V01Z	TACT SWITCH	BAND/+S	
	S 754	QSG1B11-V01Z	TACT SWITCH	DISP	
	S 755	QSG4H11-V06Y	TACT SW	VOL UP	
	S 756	QSG4H11-V06Y	TACT SW	POWER/ATT	
	S 757	QSG1B11-V01Z	TACT SWITCH	INFO/A-HBS	
	S 758	QSG1B11-V01Z	TACT SWITCH	FUNCTION	
	S 759	QSG1B11-V01Z	TACT SWITCH	MODE	
	S 760	QSG1B11-V01Z	TACT SWITCH	B.SKIP/SEARCH	
	S 761	QSG1B11-V01Z	TACT SWITCH	1/RDS	
	S 762	QSG1B11-V01Z	TACT SWITCH	2/MONO	
	S 763	QSG1B11-V01Z	TACT SWITCH	3/P.SCAN	
	S 764	QSG1B11-V01Z	TACT SWITCH	4/RANDOM	
	S 765	QSG1B11-V01Z	TACT SWITCH	5/REPEAT	
	S 766	QSG1B11-V01Z	TACT SWITCH	6/INTRO	
	S 767	QSG1B11-V01Z	TACT SWITCH	F.SKIP/SEARCH	
	S 768	QSG1B11-V01Z	TACT SWITCH	EJECT	
	S 991	QSP1A11-V10Z	TACT SW		
	LCD 1	LCD8271JNH	LCD		

BLOCK NO. 02

⚠	REF.	PARTS NO.	PARTS NAME	REMARKS	SUFFIX
	C 741	NCB21HK-223AY	C CAPACITOR	.022MF 10% 50V	
	C 742	NEF20JM-475RY	TS E CAPACITOR	4.7MF 20% 6.3V	
	C 743	NCB21HK-681AY	C CAPACITOR	680PF 10% 50V	
	CJ751	VMC0259-001	CONNECTOR		
	CP751	VMC0278-001	CONNECTOR		
	CP781	VMC0232-P16	CONNECTOR		
	D 604	MA704A	S K DIODE		
	D 741	HSM2838C	DIODE		
	D 742	HSM2838C	DIODE		
	D 743	HSM2838C	DIODE		
	D 744	HSM2836C	DIODE		
	D 745	HSM2836C	DIODE		
	D 751	GL-3EG8	LED	RDS	
	D 752	GL-3EG8	LED	MONO	
	D 753	GL-3EG8	LED	P.SCAN	
	D 754	GL-3EG8	LED	RND	
	D 755	GL-3EG8	LED	RPT	
	D 756	GL-3EG8	LED	INT	
	D 757	LN1271RAL	LED	HBS	
	D 758	LN1271RAL	LED	MODE	
	D 759	LN1461C	LED	MODE	
	D 760	LN1461C	LED	FUNCTION	
	D 761	LN1461C	LED	POWER	
	D 762	LN1461C	LED	INSERT L	
	D 763	LN1461C	LED	VOL DOWN	
	D 764	LN1461C	LED	SEL	
	D 765	LN1461C	LED	VOL UP	
	D 766	LN1461C	LED	1	
	D 767	LN1461C	LED	2	
	D 768	LN1461C	LED	3	
	D 769	LN1461C	LED	EJECT	
	D 770	LN1461C	LED	CD DOWN	
	D 771	LN1461C	LED	CD UP	
	D 772	LN1461C	LED	INSERT R	
	D 773	LN1461C	LED	4	
	D 774	LN1461C	LED	5	
	D 775	LN1461C	LED	6	
	D 776	LN1461C	LED	BAND	
	D 777	LN1461C	LED	A-HBS	
	D 778	LN1461C	LED	DISP	
	D 781	MA3062(M)	ZENER DIODE		
	D 782	MA3062(M)	ZENER DIODE		
	D 783	MA3062(M)	ZENER DIODE		
	D 784	MA3062(M)	ZENER DIODE		
	D 785	MA3062(M)	ZENER DIODE		
	D 786	MA3062(M)	ZENER DIODE		
	D 787	MA3062(M)	ZENER DIODE		
	D 793	MA3062(M)	ZENER DIODE		
	IC741	LC75850E	IC	LCD DRIVER	
	L 741	VQP1003-270Y	INDUCTOR		
	PL751	VGZ0001-037	LAMP		
	PL752	VGZ0001-037	LAMP		
	PL753	VGZ0001-037	LAMP		
	PL754	VGZ0001-037	LAMP		
	R 741	NRSA02J-154NY	MG RESISTOR	150K 5% 1/10W	

8 Exploded View of Mechanism Component Parts and Parts List

■ Mechanism component Parts Block No. M2

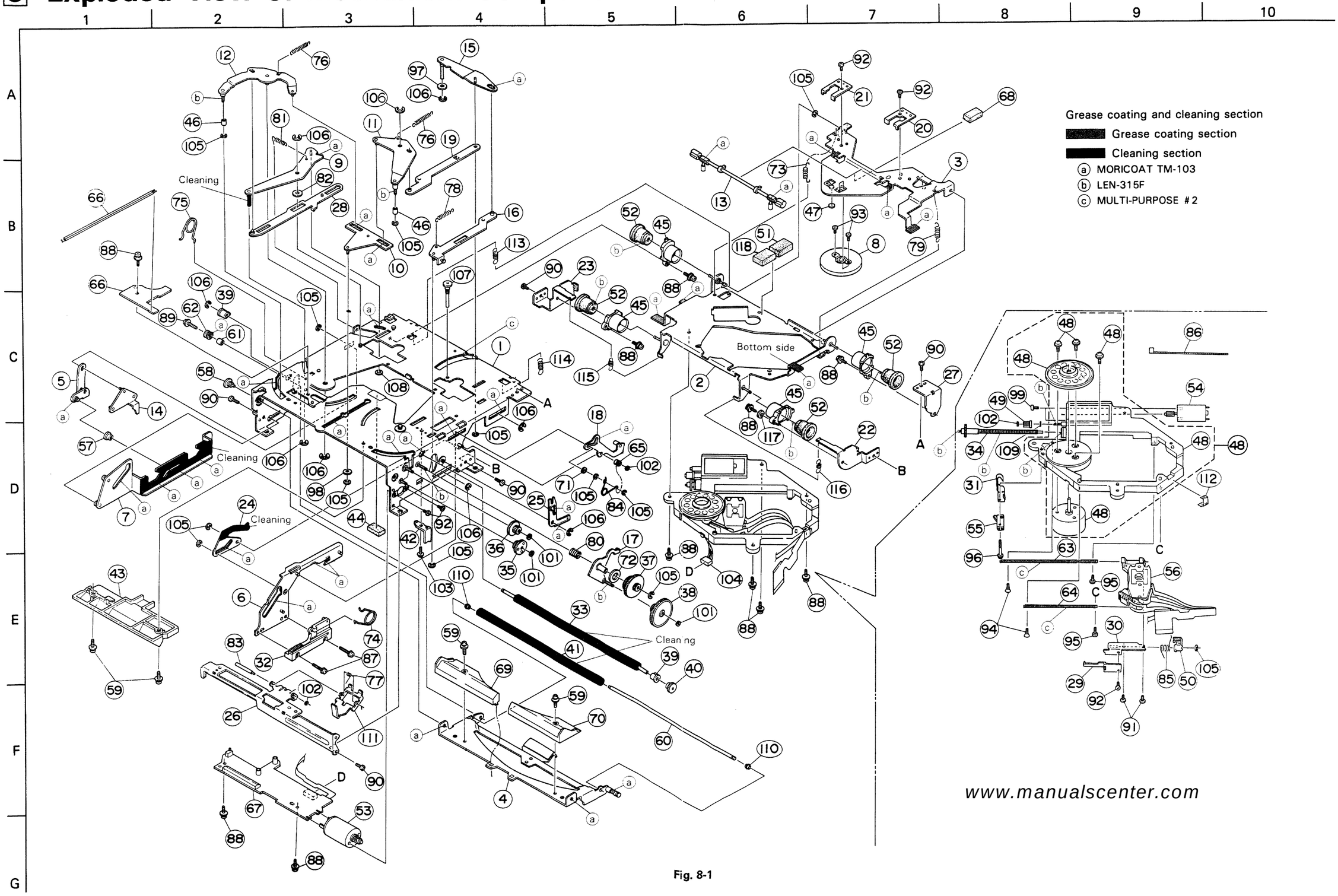

Fig. 8-1

• Mechanism Component Parts List

BLOCK NO. M2MM

⚠	REF.	PARTS NO.	PARTS NAME	REMARKS	QTY	SUFFIX	CLR
	1	P-X238-W	CHASSIS ASS'Y		1		
	2	P-X275-W	PICK BASE ASS'Y		1		
	3	P-X240-W	CHUCK ARM ASS'Y		1		
	4	P-X276-W	UP LEVER ASS'Y		1		
	5	P-X242-W	CHANGE LEVER		1		
	6	P-X243-W	DOWN LEVER (R)		1		
	7	P-X244-W	DOWN LEVER (L)		1		
	8	A-0062-W	CHUCK ASS'Y		1		
	9	P-X245-W	SENSOR LEVER		1		
	10	P-X246-W	D.CHANG PLATE		1		
	11	P-X247-W	D.CHANG ARM (R)		1		
	12	P-X248-W	D.CHANG ARM (L)		1		
	13	M-X060-W	DISC STOPPER		1		
	14	P-X249-W	PICK LOCK LEVER		1		
	15	P-X250-W	SET START ARM		1		
	16	P-X251-W	UNLOCK LEVER		1		
	17	P-X252-W	SET GEAR ARM		1		
	18	P-X260-W	UPPER LEVER	CHACK ARM	1		
	19	P-0488-W	OPERATION LEVER	SET ARM	1		
	20	P-0489-W	SPRING PLATE(R)	STOPER	1		
	21	P-0490-W	SPRING PLATE(L)	STOPER	1		
	22	P-0547-W	DUMPER BRACKET	FRONT RIGHT	1		
	23	P-0548-W	DUMPER BRACKET	FLONT LEFT	1		
	24	P-0511-W	PIC.LOCK.LEVER	RIGHT	1		
	25	P-0494-W	LOCK LEVER		1		
	26	P-0549-W	STIFFENER ANGLE		1		
	27	P-0496-W	DUMPER BRACKET	REAR LEFT	1		
	28	P-X254-W	LOCK PLATE ASSY	SENSOR	1		
	29	P-0550-W	SWITCH PLATE		1		
	30	P-X277-W	TIP PLATE ASS'Y	FEED	1		
	31	P-0552-W	SPRING PLATE	FEED GEAR	1		
	32	A-0063-W	DOWN RACK ASS'Y		1		
	33	A-0064-W	LOAD.ROLLER (A)		1		
	34	A-0065-W	F.GEAR ASS'Y(A)	FEED	1		
	35	M-0232-W	LOADING GEAR(A)		1		
	36	M-0296-W	LOADING GEAR(B)		1		
	37	M-0234-W	LOADING GEAR(C)		1		
	38	M-0235-W	SET GEAR		1		
	39	M-0236-W	METAL		2		
	40	M-0237-W	LOAD.ROLL.GEAR		1		
	41	M-0238-W	LOAD.ROLLER(B)		1		
	42	M-0302-W	R.GUIDE		1		
	43	M-0304-W	DISC GUIDE TOP.		1		
	44	M-0241-W	CHUCK PUSHER		1		
	45	M-0242-W	DUMPER CASE		4		
	46	M-0243-W	COLLAR	DISC CHANG	2		
	47	M-0245-W	CHUCK POLYS.		1		
	48	M-0305-W	PIC-UP BASE		1		
	49	M-0249-W	FEED GEAR (B)		1		
	50	M-0250-W	FEED TIP		1		
	51	M-0312-W	CHUCK RUBBER(B)		1		
	52	M-X065-W	DUMPER ASS'Y		4		
	53	K-0256-W	LOAD.MOTOR ASSY		1		
	54	K-0360-W	FEED MOTOR ASSY		1		
	55	E-X075-W	LEAF SWITCH		1		
⚠	56	E-X180-W	PICK-UP ASS'Y		1		
	57	F-0590-W	SHAFT COLLAR	CHANGE LEVER	1		
	58	F-0592-W	UP.LEVER SCREW		1		
	59	B-0015-W	GUIDE U.SCREW		4		

BLOCK NO. M2MM

⚠	REF.	PARTS NO.	PARTS NAME	REMARKS	QTY	SUFFIX	CLR
	60	F-0616-W	ROLLER SHAFT(B)		1		
	61	F-0568-W	UP SHAFT COLLAR		1		
	62	F-0597-W	UP SHAFT(L)		1		
	63	F-0667-W	MAIN PIC SHAFT		1		
	64	F-0668-W	SUB PIC SHAFT		1		
	65	F-0606-W	SPRING COLLAR		1		
	66	K-0366-W	SENSOR BOARD		1		
	67	K-0365-W	MAIN PCB ASS'Y		1		
	68	M-0254-W	GUIDE RUBBER		1		
	69	M-0301-W	GUIDE UNDER(L)		1		
	70	M-0303-W	GUIDE UNDER(R)		1		
	71	B-0020-W	WASHER	(2X5X0.3)	1		
	72	M-0253-W	SET GEAR FELT		1		
	73	S-0280-W	SUB SPRING	CHACK ARM	1		
	74	S-0264-W	TORSION SPRING	RACK	1		
	75	S-0265-W	UP SPRING (L)		1		
	76	S-0266-W	ARM SPRING	DISC CHANG	2		
	77	S-0300-W	LEVER SPRING	STOP	1		
	78	S-0268-W	SPRING	UNLOCK LEVER	1		
	79	S-0269-W	SPRING	CHUCK ARM	1		
	80	S-0270-W	SPRING	SET GEAR ARM	1		
	81	S-0271-W	SPRING	SENSOR LEVER	1		
	82	M-0315-W	P.WASHER	2.6X5X0.13	1		
	83	F-0665-W	SHAFT	STOP LEVER	1		
	84	S-0276-W	REVERSE SPRING	LEVER	1		
	85	S-0301-W	SPRING	FEED TIP	1		
	86	QHX5080-001	WIRE CLAMP		1		
	87	B-0035-W	SCREW	DOWN RACK	3		
	88	B-0022-W	SCREW	(2X5)	10		
	89	B-0023-W	SCREW	UP SHAFT	1		
	90	SDSP2003Z	SCREW		5		
	91	SPSH2030N	SCREW	FEED TIP PLATE	2		
	92	SPSK2022M	MINI SCREW		5		
	93	SPSH1720M	MINI SCREW	CHACK	2		
	94	B-0029-W	SCREW	PICK BASE	2		
	95	B-0025-W	SCREW	PICK BASE	2		
	96	B-0016-W	SCREW	LEAF SWITCH	1		
	97	B-0030-W	WASHER	SET START	1		
	98	B-0031-W	WASHER	DISC SELECT PLA	1		
	99	SDSP2004Z	SCREW	FEED MOTOR	2		
	101	M-0318-W	SLIT WASHER	(1.6X3.2X0.25)	3		
	102	M-0319-W	SLIT WASHER	(1.2X3X0.25)	3		
	103	B-0018-W	PCB SCREW		1		
	104	W-X021-W	CONNECTOR ASS'Y		1		
	105	REE1500	E.RING		13		
	106	REE2000	E.RING		9		
	107	F-0594-W	STOPPER SCREW		1		
	108	M-0320-W	SLIT WASHER	SENSOR LEVER	1		
	109	M-0321-W	WASHER	FEED GEAR	1		
	110	M-0261-W	ROLLER SFT.BUSH		2		
	111	P-0546-W	STOP LEVER		1		
	112	P-0554-W	WIRE CLAMPER		1		
	113	S-0304-W	DUMPER SPRING	RL	1		
	114	S-0303-W	DUMPER SPRING		1		
	115	S-0302-W	DUMPER SPRING	FRONT LEFT	2		
	116	S-0305-W	DUMPER SPRING	FRONT RIGHT	2		
	117	B-0036-W	WASHER		1		
	118	M-0322-W	CHUCK RUBBER(B)		1		

9 Exploded View of Enclosure Component Parts and Parts List

■ Exploded Component Parts Block No. M1

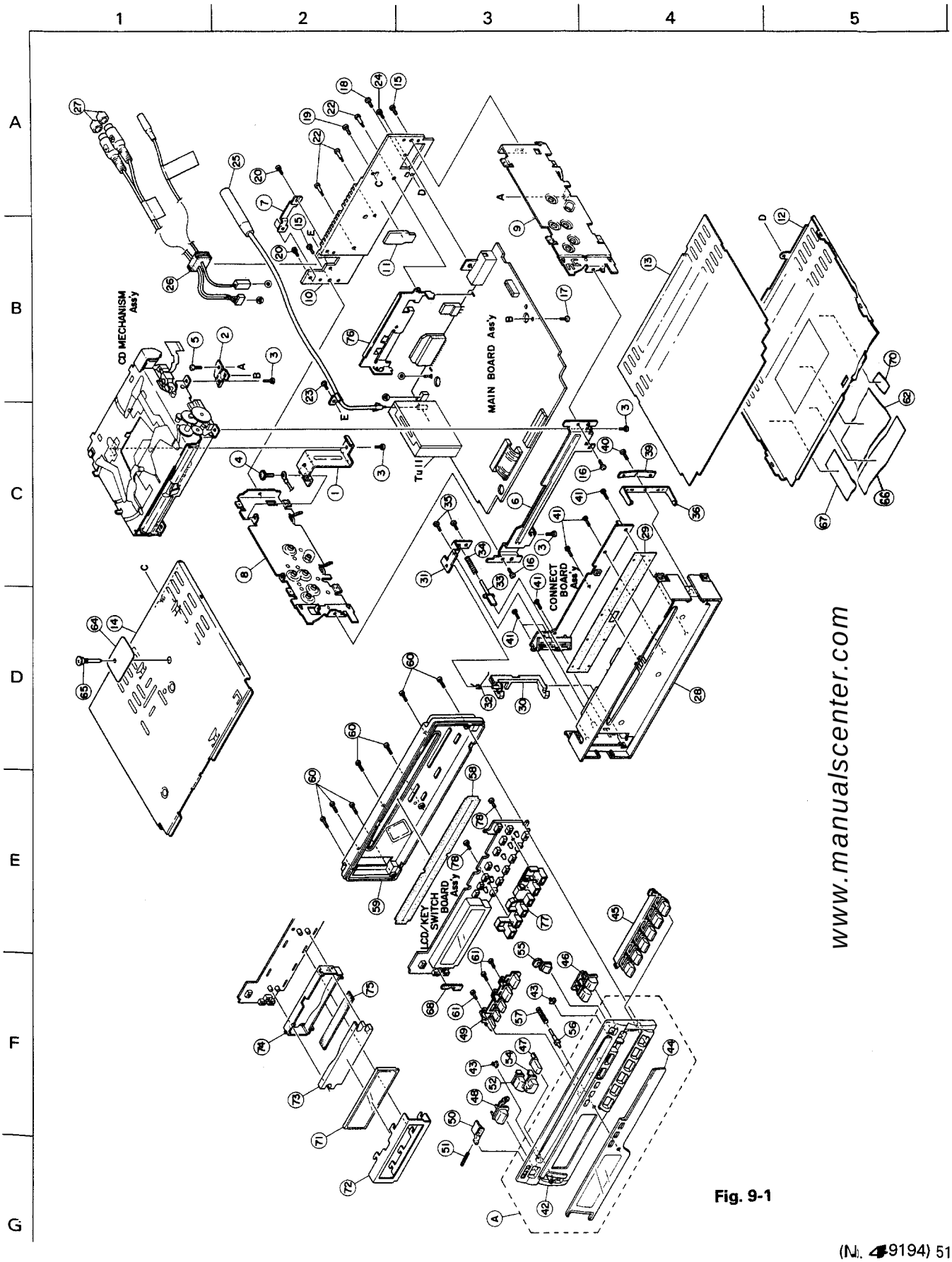

Fig. 9-1

• Enclosure Component Parts List

BLOCK NO. M1MM

⚠	REF.	PARTS NO.	PARTS NAME	REMARKS	QTY	SUFFIX	CLR
	A	ZCKDG3800RK-NPA	NOSE PIECE ASSY	SERVICE PARTS	1		
	1	VKL7201-002	MECHA BRACKET	MECHA+EJECT LEV	1		
	2	VKL7202-002	MECHA BRACKET		1		
	3	SPSP2606Z	SCREW	MECHA+M.BKT	4		
	4	SDST2606Z	SCREW	M.BKT+SIDE BKT	1		
	5	SDST2606Z	SCREW	M.BKT+SIDE BKT	1		
	6	VKM3771-001	FRONT BRACKET		1		
	7	VKL7661-001	CORD BRACKET		1		
	8	VKL2582-205	SIDE BKT(L)		1		
	9	VKL2583-204	SIDE BKT(R)		1		
	10	VJC3249-004	REAR PANEL		1		
	11	VMH4041-001	HEAT SINK	MOUNT TO R.PANE	1		
	12	VKM3500-203	BOTTOM COVER		1		
	13	VMA3213-002	INSULATOR		1		
	14	VKM3216-008	TOP COVER		1		
	15	SDST2606Z	SCREW	FRONT+SIDE(L,R)	2		
	16	SDST2606Z	SCREW	SIDE L,R+REAR P	2		
	17	SDST2606Z	SCREW	MECHA.+ FRONT B	1		
	18	SDSP2606Z	SCREW	M.BRACKET+SIDE	1		
	19	SDSP2606Z	SCREW	MAIN BARD+SIDE(	1		
	20	LPSP2606Z	SCREW	REAR+CORD.BKT	2		
	22	VKZ4553-002	SPECIAL SCREW	IC BKT+REAR PAN	3		
	23	LPSP2606Z	SCREW	REAR PANEL+ANTE	1		
	24	LPSP2606Z	SCREW	11PIN CONNECTOR	1		
	25	VMP0029-031	ANT SOCKET		1		
	26	VMP3260-001	PIN CORD ASS'Y		1		
	27	VYTA500-001	PIN CAP		2		
	28	VJC2500-001	FRONT CHASSIS	NOSE ASS'Y	1		
	29	VYTA511-001	BLIND(C)		1		
	30	VKS5456-002	LOCK LEVER		1		
	31	VKL7651-001	LEVER BRACKET		1		
	32	VKW5092-002	TORSION SPRING	LOCK LEVER	1		
	33	VXP5211-001	RLS KNOB		1		
	34	VKW3001-310	COMP.SPRING	RLS KNOB	1		
	35	SDSF2006Z	SCREW	LEVER BRACKET	2		
	36	VKY4665-00E	LOCK SP ASS'Y	PLATE SPRING	1		
	39	VKL7647-001	PLATE		1		
	40	SDSF2008M	SCREW	LOCK SPRING	1		
	41	SPSN1755N	MINI SCREW	CONNECT BOARD	6		
	42	VJG1239-003	FRONT PANEL		1		
	43	VJK4405-002	LIGHT LENS		2		
	44	VJK2187-003	FINDER		1		
	45	VXP2072-001	PRESET BUTTON		1		
	46	VXP3603-001	UP DOWN BUTTON		1		
	47	VXP3604-001	BOL BUTTON		1		
	48	VXP3605-001	POWER BUTTON	A.HBS/MANU	1		
	49	VXP3606-002	ILL BUTTON	FUNCTION, B/CLK	1		
	50	VXP3607-001	DETACH BUTTON		1		
	51	VKW3001-309	COMP. SPRING	DETACH BUTTON	1		
	52	VXP3611-002	+ BUTTON		1		
	54	VXP3612-002	- BUTTON		1		
	55	VXP3613-001	EJECT BUTTON		1		
	56	VXP5210-001	RESET BUTTON		1		
	57	VKW3001-305	COMP.SPRING	RESET BUTTON	1		
	58	VYTA512-001	BLIND(P)		1		

BLOCK NO. M1MM

⚠	REF.	PARTS NO.	PARTS NAME	REMARKS	QTY	SUFFIX	CLR
	59	VJG1240-003	REAR COVER		1		
	60	SPSN1755N	MINI SCREW	FRONT+REAR	7		
	61	SPSN1755N	MINI SCREW	ILL BUTTON+F.PA	3		
	62	VYN3461-002SA	NAME PLATE		1	G,GE	
		VYN3461-001SA	NAME PLATE		1	B,E	
		VYN3461-003SA	NAME PLATE		1	GI	
	64	VND4966-001	CAUTION CARD	TOP COVER TRANS	1		
	65	F-0594-W	STOPPER SCREW		1		
	66	VND4220-001	LASER CAUTION	TO BOTTOM	1		
	67	VND4221-001	CLASS 1 LABEL	TO BOTTOM	1		
	68	VYTH529-001	BUTTON CUSHION	+BUTTON	1		
	70	VND4597-001	APROVAL LABEL	TO BOTTOM	1		
	71	LCD8271JNH	LCD	LCD1	1		
	72	VKM3770-002	LCD CASE		1		
	73	VJK3622-002	LCD LENS		1		
	74	VKS3647-002	LENS CASE		1		
	75	VMZ0124-001	INTER CONECTOR		1		
	76	VKL7650-001	IC BRACKET		1		
	77	VKS3646-002	LED HOLDER		1		
	78	SPSN1755N	MINI SCREW		2		

10 Packing

Block No. M3

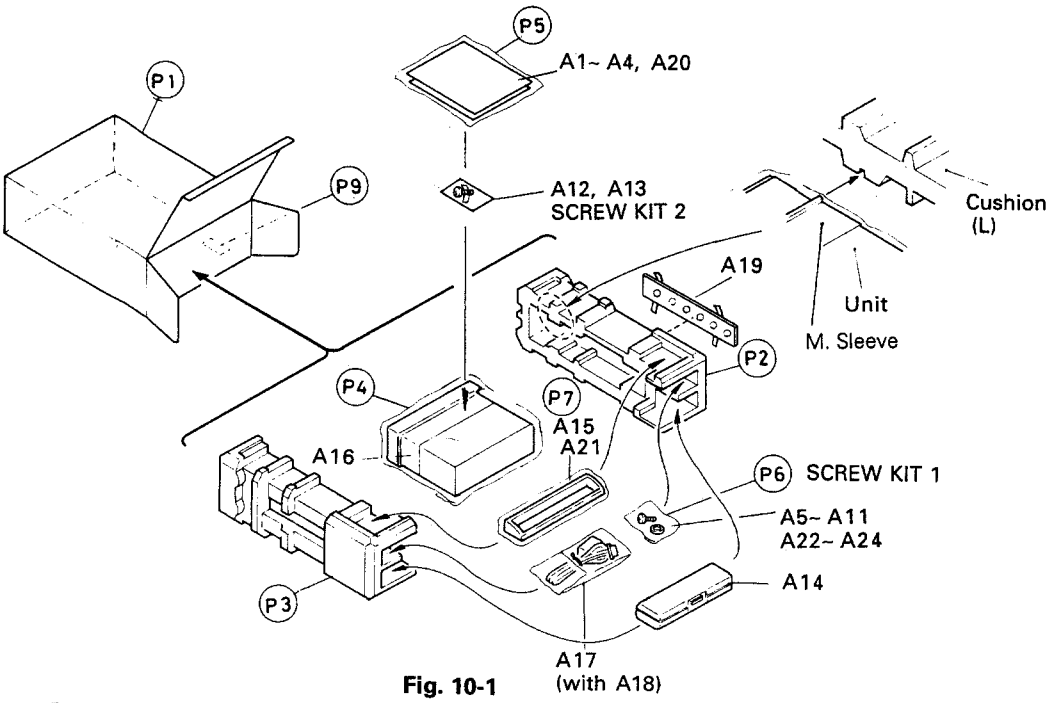

Fig. 10-1

SCREW KIT 1

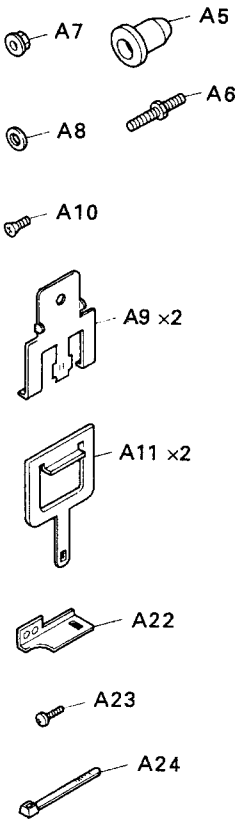

• Packing Parts List

BLOCK NO. M3MM

△	REF.	PARTS NO.	PARTS NAME	REMARKS	QTY	SUFFIX	CLR
	A 1	VNN3461-211	INSTRUCTIONS		1		
		VNN3461-451	INSTRUCTIONS		1	E	
		VNN3461-481	INSTRUCTIONS		1	E	
		VNN3461-471	INSTRUCTIONS		1	GI	
	A 2	VNC2400-090	CAUTION SHEET		1		
	A 3	BT-20066A	WARRANTY CARD		1	B	
		BT20060	WARRANTY CARD		1	B	
		BT-20135	WARRANTY CARD		1	G	
	A 4	E43486-340B	SAFETY INST SHE		1	B	
	A 5	VKZ4027-002	PLUG NUT		1		
	A 6	VKH4871-001	MOUNT BOLT		1		
	A 7	VKZ4328-001	LOCK NUT	FOR M5	1		
	A 8	WNS5000Z	WASHER		1		
	A 9	VKY3127-001	SIDE SPRING		2		
	A 10	VKZ4671-001	SPECIAL SCREW	FOR SIDE SPRING	2		
	A 11	VKL7233-001	HOOK		2		
	A 12	SPSJ1725M	SCREW		1		
	A 13	VND4619-002	SHEET		1		
	A 14	VJB3036-002	HARD CASE		1		
	A 15	VJC3250-001	TRIM PLATE		1		
	A 16	VKL3732-015	MOUNTING SLEEVE		1		
	A 17	VMC0014-132	11P CORD ASS'Y		1		
	A 18	QMF6163-100J1	FUSE	WITH CORD ASS'Y	1		
	A 19	VKL5460-001	STAY		1		
	A 20	VND3050-001	IDENTITY CARD		1		
	A 21	VNF3428-001	P.O.P.SHEET	FOR TRIM PLATE	1		
	A 22	VKL7272-001	HOLD BRACKET		1		
	A 23	LPSP2606Z	ASSY SCREW	FOR CORD BRACET	1		
	A 24	QHX5080-001	WIRE CLAMP		1		
	KIT 1	KDG3800RK-SCREW	SCREW KIT	SERVICE PARTS	1		
	KIT 2	XLG3900K-SCREW2	SCREW PARTS KIT	A12 AND A13	1		
	P 1	VPC3461-001	CARTON	CARTON	1		
	P 2	VPH1634-001	CUSHION(L)		1		
	P 3	VPH1635-001	CUSHION(R)		1		
	P 4	VPE3005-066	POLY BAG	FOR SET	1		
	P 5	QPGB017-02404	POLY BAG	FOR INSTRUCTONS	1		
	P 6	QPGA008-01205	POLY BAG	FOR SCREW KIT	1		
	P 7	QPGA010-03003	POLY.BAG	FOR TRIM PLATE	1		
	P 9	VND3046-004	SERIAL TICKET		1	B	
		VND3046-003	SERIAL TICKET		1	E	
		VND3046-001	SERIAL TICKET		1	GI,GE	
		VND3046-005	SERIAL TICKET		1	G	

JVC
VICTOR COMPANY OF JAPAN, LIMITED
PERSONAL AUDIO PRODUCTS DIVISION 10-1, 1-chome, Ohwatari-machi, Maebashi-city, Japan

Printed in Japan
H0509-S-