clarion

Clarion Co., Ltd.
Export Division - 22-3, Shibuya 2-chome, Shibuyaku, Tokyo, 150 Japan Tel: 03-3400-1121
Service Dept.- 50 kamitoda,Toda-shi,Saitama,335 Japan Tel: 048-443-1111 FAX:048-433-6996

Published by Service Dept.
298-5588-00 Feb.1997 P
Printed in Japan

Service Manual

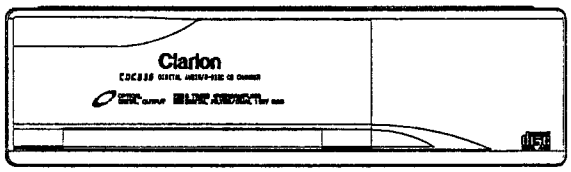

(CDC635)

6 Disc CD Changer

Model ***RDC635***
(PE-2249B)

Model ***CDC635***
(PE-2249C,E,K)

Model ***RDC634***
(PE-2254B)

Model ***M635***
(PE-2254C,E)

■SPECIFICATIONS

Sampling frequency:
44.1kHz
Frequency response:
5Hz to 20kHz (±1dB)
Signal to noise ratio:
105dB (1kHz) IHF.A
Wow and flutter: below measurement limits
Power supply: DC14.4V (10.8V to 15.6V)
negative ground
Current consumption:
Less than 1A
Weight: 3.8lb. (1.7kg)

※ Specification and design are subject to change without notice for further improvement.

■DESTINATION

U.S.A.

Model	Digital-output
RDC635(PE-2249B-A)	○
CDC635(PE-2249C-A)	○
RDC634(PE-2254B-A)	—
M635(PE-2254C-A)	—

EUROPEAN

Model	Digital-output
CDC635(PE-2249E-A)	○
M635(PE-2254E-A)	—

OTHER COUNTRY

Model	Digital-output
CDC635(PE-2249K-A)	○

MC-Service

■COMPONENTS

PE-2249B-A / C-A / E-A / K-A
PE-2254B-A / C-A / E-A

Main unit	————	1
Accessory box	CAA-355-200	1
Mounting bracket	300-9725-01	2
Mounting bracket	300-9811-00	2
Lock screw	716-1793-00	3
Extension lead	854-3227-00	1
(alternative part	854-2654-50	1)
Parts bag	————	
Clamp	321-0774-00	1
Lead holder	335-0833-01	2
Machine screw	714-5006-79	1
M6 wing nut	722-0545-00	4
D-sems-hexagon bolt	734-5008-37	4
Parts bag	————	
Cushion rubber	345-7651-00	2

■ To engineers in charge of repair or inspection of our products.

Before repair or inspection,make sure to follow the instructions so that customers and Engineers in charge of repair or inspection can avoid suffering any risk or injury.

1. Use specified parts.
   The system uses parts with special safety features against fire and voltage.Use only parts with equivalent characteristics when replacing them.
   The use of unspecified parts shall be regarded as remodeling for which we shall not be liable.The onus of product liability (PL) shall not be our responsibility in cases where an accident or failure is as a result of unspecified parts being used.
2. Place the parts and wiring back in their original positions after replacement or re-wiring.
   For proper circuit construction,use of insulation tubes,bonding,gaps to PWB,etc,is involved.The wiring connection and routing to the PWB are specially planned using clamps to keep away from heated and high voltage parts.Ensure that they are placed back in their original positions after repair or inspection.
   If extended damage is caused due to negligence during repair,the legal responsibility shall be with the repairing company.
3. Check for safety after repair.
   Check that the screws,parts and wires are put back securely in their original position after repair.Ensure for safety reasons there is no possibility of secondary ploblems around the repaired spots.
   If extended damage is caused due to negligence of repair,the legal responsibility shall be with the repairing company.
4. Caution in removal and making wiring connection to the parts for the automobile.
   Disconnect the battery terminal after turning the ignition key off.If wrong wiring connections are made with the battery connected, a short circuit and/or fire may occur.If extensive damage is caused due to negligence of repair,the legal responsibility shall be with the repairing company.
5. Cautions regarding chips.
   Do not reuse removed chips even when no abnormality is observed in their appearance.Always replace them with new ones.(The chip parts include resistors,capacitors,diodes,transistors,etc).The negative pole of tantalum capacitors is highly susceptible to heat,so use special care when replacing them and check the operation afterwards.
6. Cautions in handling flexible PWB
   Before working with a soldering iron,make sure that the iron tip temperature is around 270℃.Take care not to apply the iron tip repeatedly(more than three times)to the same patterns.Also take care not to apply the tip with force.
7. Turn the unit OFF during disassembly and parts replacement.Recheck all work before you apply power to the unit.
8. Cautions in checking that the optical pickup lights up.
   The laser is focused on the disc reflection surface through the lens of the optical pickup. When checking that the laser optical diode lights up,keep your eyes more than 30cms away from the lens.Prolonged viewing of the laser within 30cms may damage your eyesight.
9. Cautions in handling the optical pickup
   The laser diode of the optical pickup can be damaged by electrostatic charge caused by your clothes and body.Make sure to avoid electrostatic charges on your clothes or body,or discharge static electricity before handling the optical pickup.

9-1. Laser diode
   The laser diode terminals are shorted for transportation in order to prevent electrostatic damage.After replacement,open the shorted circuit.When removing the pickup from the mechanism,short the terminals by soldering them to prevent this damage.

9-2. Actuator
   The actuator has a powerful magnetic circuit.If a magnetic material is put close to it.its characteristics will change.Ensure that no foreign substances enter through the ventilation slots in the cover.

9-3. Cleaning the lens
   Dust on the optical lens affects performance.To clean the lens,apply a small amount of isopropylalcohol to lens paper and wipe the lens gently.

MC-Service

■CAUTION

This equipment has been tested and found to comply with the limits for a Class B digital device, pursuant to Part 15 of the FCC Rules.

These limits are designed to provide reasonable protection against harmful interference in a residential installation. This equipment generates uses, and can radiate radio frequency energy and, if not installed and used in accordance with the instructions, may cause harmful interference to radio communications. However, there is no guarantee that interference will not occur in a particular installation. If this equipment does cause harmful interference to radio or television reception, which can be determined by turning the equipment off and on.

Bottom View of CD Changer Unit

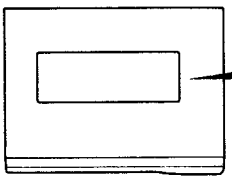

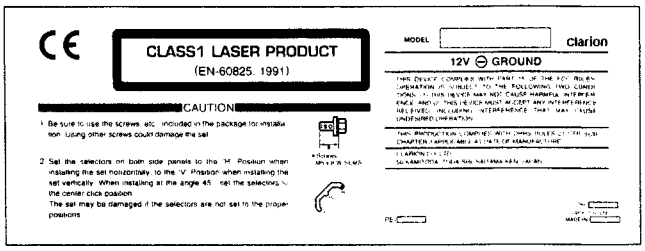

Top View of CD Changer Unit

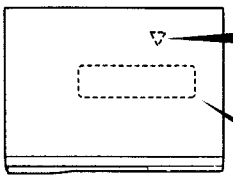

CAUTION – INVISIBLE LASER RADIATION WHEN OPEN AND INTERLOCKS DEFEATED AVOID EXPOSURE TO BEAM.

VORSICHT! UNSICHTBARE LASSERSTRAHLUNG TRITT AUS. WENN DECKEL GEOFFNET UND WENN SICHERHEITSVERRIEGELUNG UBERBRUCKT IST NICHT DEM STRAHL AUSSETAZEN!

WARNING – OSYNLIG LASERSTRÅLNING NÅR DENNA DEL ÄR OPPNAD OCH SPARR ÄR URKOPPLAD. STRÅLEN ÄR FARLIG.

ADVARSEL – USYNLIG LASERSTRÅLING VED ÅBNING. NÅR SIKKERHEDSAFBRYDERE ER UDE AF FUNKTION. UNDGÅ UDSÆTTELSE FOR STRALING.

CAUTIONS:
This appliance contains a laser system and is classified as a "CLASS 1 LASER PRODUCT". To use this model properly, read this Owner's Manual carefully and keep this manual for your future reference. In case of any trouble with this player, please contact your nearest 'AUTHORIZED service station". To prevent direct exposure to the laser beam, do not try to open the enclosure.

■TROUBLESHOOTING

Sympton	Cause	Remedy
Loss of power	Bad connection	Check connections.
Magazine cannot be loaded	Magazine inserted wrongly	Insert correctly.
	A magazine is already in the player.	Eject the magazine and insert the other.
	Distorted magazine	Buy new magazine CAA-355.
"No Disc" sign appears when searching for discs.	Disc inserted upside-down	Read the section on "INSERTING THE CD" carefully and reinsert the CD correctly.
	Moisture or dirt on disc	Wipe disc free of moisture and dirt.
Noise, skipping	The installation selector levers are set to different positions on both sides.	Set the installation selector levers to the same position on both sides.
	The unit installation direction and the installation selector lever positions do not match.	Set the unit installation direction and the installation selector lever positions to match each other. When installed at an angle, change the installation selector lever to a position(H,45 V) not prone to noise or sound loss.
	Disc bent or badly damaged	Compare with another disc. If bad, discared the damaged disc.
	Disc is very dirty	Clean the disc.
Mechanism does not function.	Mechanism error	1. Referring to section "INSTALLATION", check the three angle of installation selector levers are properly set. If not, set them at the proper position for the angle of installation. 2. Check whether the CD magazine can be ejected by pressing eject button, then insert a new CD magazine.
Magazine is ejected even when inserted into the unit.	Disc holder is not correctly inserted into the magazine.	Read the section on "INSERTING THE CD" carefully and reinsert the disc holder correctly.

■BLOCK DIAGRAM

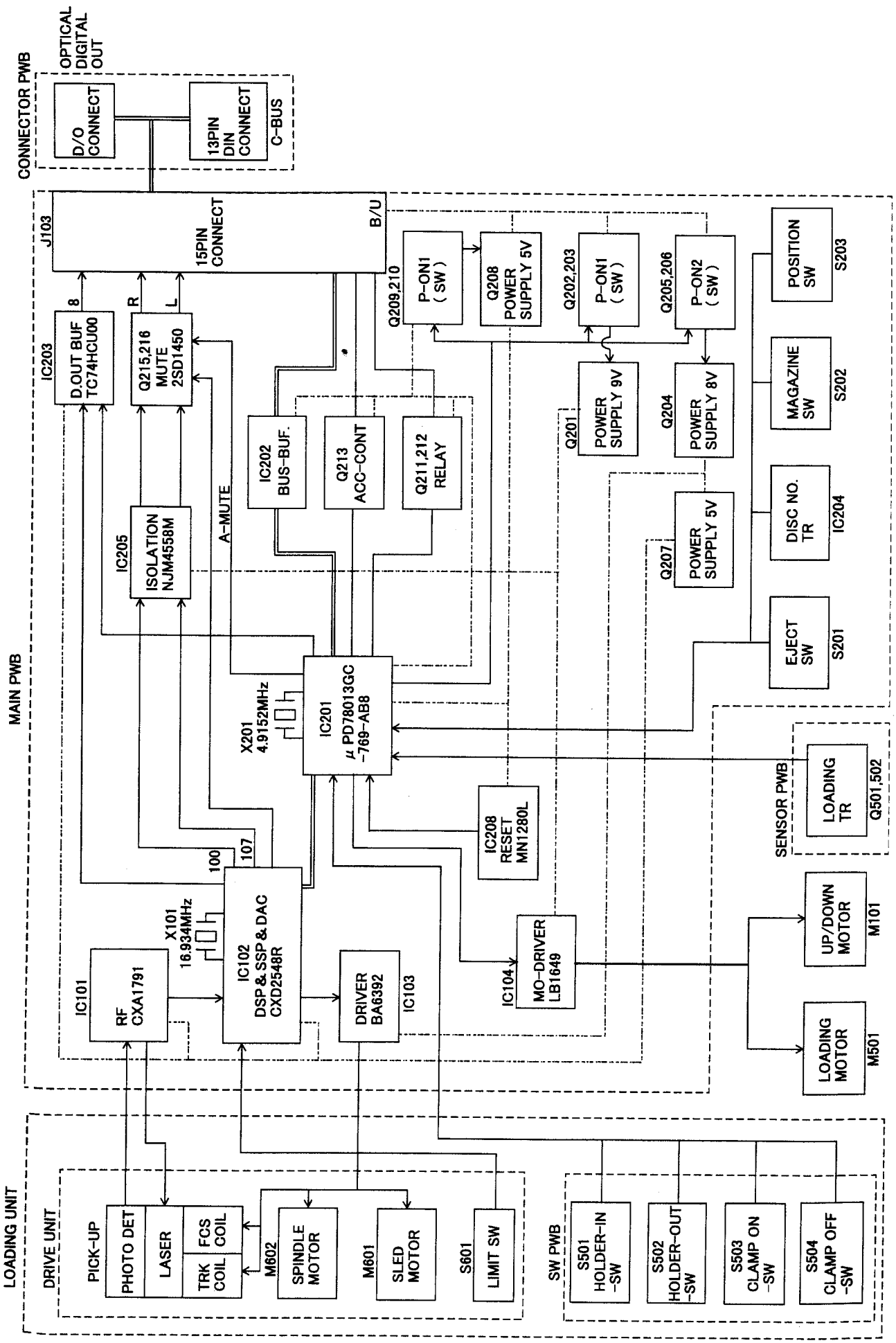

■EXPLANATION OF IC

■ μPD78013GC-769-AB8 052-5019-00 CD CONTROLLER

Outward Form
64 pins, plastic QFP

Terminal Description

No.	Symbol	I/O	Function
1	PWMI	O	Output terminal for spindle motor control
2	$\overline{\text{XRST}}$	O	Reset output terminal to CXD2548R
3	CLOK	O	Clock output terminal for serial data transfer to CXD2548R
4	XLAT	O	Latch output terminal for serial data transfer to CXD2548R
5	DATA	O	Serial data output terminal to control CXD2548R
6	SCLK	O	Clock to read SENS data from CXD2548R
7	SENS	I	Input terminal for output of internal status of CDIC from CXD2548R
8	$\overline{\text{SYSM}}$	O	Output terminal for analog MUTE circuit control
9	VSS		GND terminal
10 11 12 13	$\overline{\text{TEST 1}}$ $\overline{\text{TEST 2}}$ $\overline{\text{TEST 3}}$ $\overline{\text{TEST 4}}$	I	Not in use (open)
14 15 16	N.C.	I	Not in use. Fixed to "H"
17	$\overline{\text{EJ-SEL}}$	I	At "L", EJECT is disabled.
18	A-MUTE	O	Control terminal for analog MUTE circuit. Discontinue MUTE by "L" output at Play, Manual Search. Apply MUTE by "H" output at Stop, Track Search
19	D-Stop	O	Output control terminal for Digital Out Outputs "L" at STOP. Outputs "H" at PLAY
20	RELAY	O	Terminal controlling Audio-Relay for Switch-to-Out Box controlled by command of C-Bus. Outputs "H" while auto changer is in Play
21	PON 1	O	Control terminal for System-Power-1. Sets this control to "H" and supplies power to the whole system when: magazine is inserted and EJECT Key is "ON" and Acc-Cont terminal (37 pin) is "H" or Acc-Cont is "L".
22	PON 2	O	Control terminal for System-Power-2. Sets this port to "H" and supplies power to CD-IC: CXD2548R, at playback by auto changer. At Stop, sets the port to "L" after stopping spindle motor. Then cut off the CD-IC power supply.
23	N.C.	I	Not in use. Fixed to "H"
24	VSS	–	GND terminal
25	DNOTR	I	Input terminal for photo censor detecting Disc No.
26	POSSW	I	Input terminal for SW detecting the position that sets the base level for the ups and downs of mechanism.
27 28 29 30	N.C.	I	Not in use. Fixed to "L"
31 32	LDCCW LDCW	O	Output terminal controlling motor driver for Load/Unload action of mechanism Load: LDCCW "H", LDCW "L" Unload: LDCCW "L", LDCW "H" Brake: LDCCW "H", LDCW "H" Stop: LDCCW "L", LDCW "L"
33 34	UDCCW UDCW	O	Output terminal controlling motor driver for Up/Down action of mechanism Up: UDCCW "L", UDCW "H" Down: UDCCW "H", UDCW "L" Brake: UDCCW "H", UDCW "H" Stop: UDCCW "L", UDCW "L"
35	RESET	I	RESET input to this IC
36	SCOR	I	SUB CODE SYNC for CXD2548R Terminal inputting signal from S0+S1 output terminal
37	ACC-CONT	I	ACC-CONT input terminal.
38	$\overline{\text{MGSW}}$	I	Input terminal for detection of magazine insertion "L": Inserted
39	EJECT	I	Input terminal for EJECT Key.
40	VDD	–	Power supply terminal +5V ±10%
41 42	X 2 X 1	O I	Ceramic resonator connecting terminal for system clock oscillation.
43	N.C.	I	Not in use. Fixed to "L"
44	N.C.	O	Not in use
45 46	N.C.	I	Not in use. Fixed to "L"
47	$\overline{\text{TEMP}}$	I	Input terminal of signal from temperature detection circuit. When temperature is high input "L"
48	S/E	I	Input terminal for selection of mechanism control specification "H": side load type "L": end load type
49	$\overline{\text{HOLDER-IN}}$	I	SW input terminal detecting holder inserted in magazine. L: Holder inserted
50	$\overline{\text{HOLDER-OUT}}$	I	SW input terminal detecting if holder gets out from magazine. "L": holder is out
51	$\overline{\text{CLAMP-OFF}}$	I	SW input terminal detecting if clamper is off. "L": Clamper is off
52	$\overline{\text{CLAMP-ON}}$	I	SW input terminal detecting if clamper clamps "H": Clamper clamps
53	$\overline{\text{LOD-TR 2}}$	I	Input terminal for photo transistor to determine clamped disk (8cm/12cm) and detecting its insertion into magazine. "dark": 12cm disk "bright": holder is in
54	$\overline{\text{LOD-TR 1}}$	I	Input terminal for photo transistor to detect disk in the holder and holder in the magazine. "dark": disk is in "bright": holder is in
55 56	N.C	I	Not in use. Fixed to "H"
57	SQCK	O	Output terminal for clock reading SUB-Q DATA from CXD2548R
58	N.C	I	Not in use. Fixed to "H"
59	SQS 0	I	Input terminal for SUB-Q data output from CXD2548R
60	N.C	I	Not in use. Fixed to "L"
61	$\overline{\text{SRQ}}$	O	Output terminal for C-BUS service request It changes "H" to "L" when slave CPU wants master to read data informing change of status. It changes "L" to "H" after receiving address from master.
62	SSI	I	Input only terminal for C-BUS DATA LINE
63	SSO	O	Output only terminal for C-BUS DATA LINE
64	SCK	I	Input terminal for C-BUS serial lock data line (transmission speed: 262kHz)

MC-Service

■EXPLODED VIEW • PARTS LIST

Main section

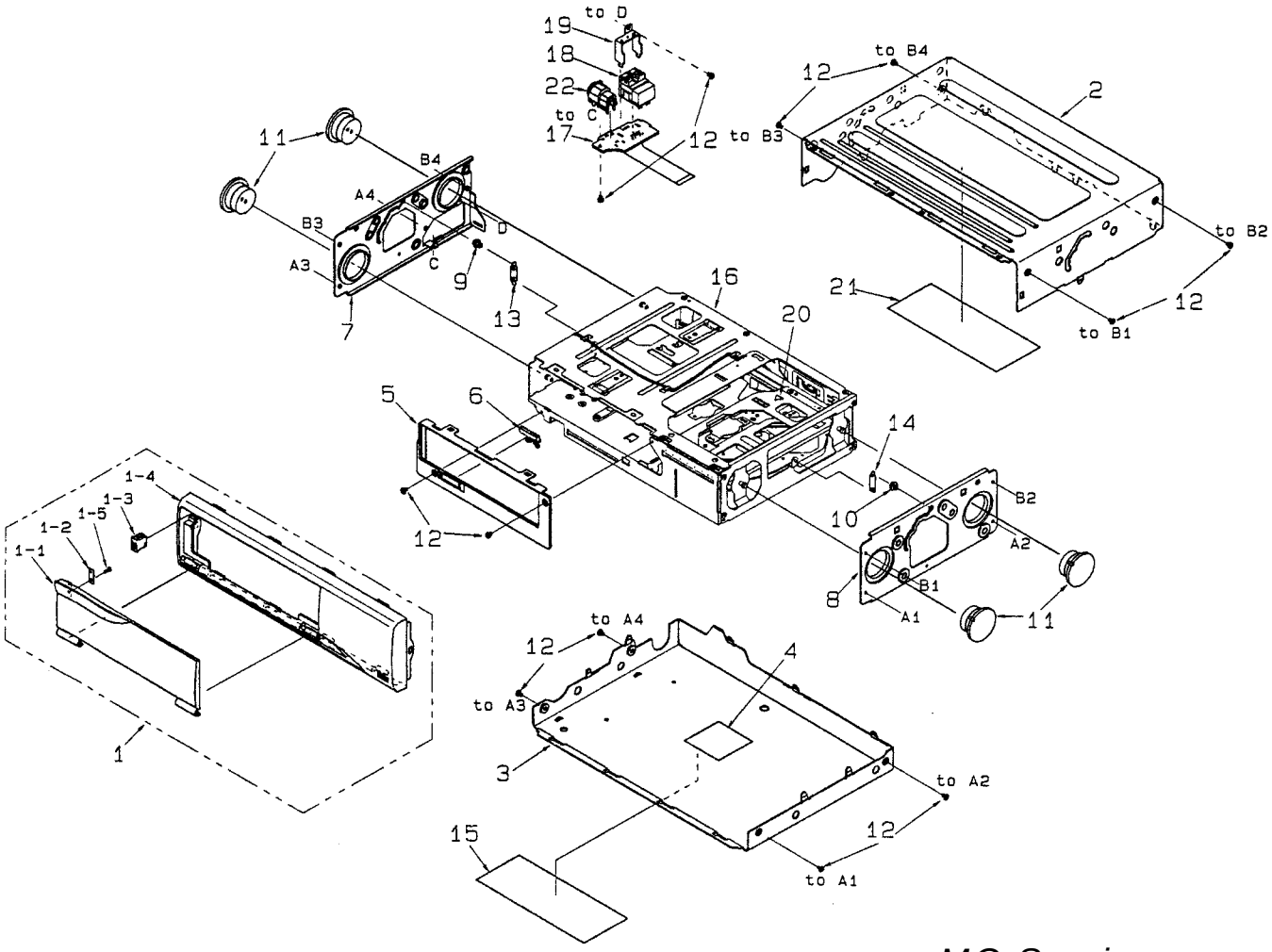

MC-Service

NO.	PART NO.	DESCRIPTION	Q'TY
1	940-7804-05 940-7804-04 940-7804-00 940-7804-06 940-7804-08 940-7804-01	ESCUTCHEON ASSY (PE-2249B) (PE-2249C) (PE-2249E,K) (PE-2254B) (PE-2254C) (PE-2254E)	1
1-1	320-0538-05 320-0538-04 320-0538-00 320-0538-06 320-0538-08 320-0538-01	DUSTPROOF CVR (PE-2249B) (PE-2249C) (PE-2249E,K) (PE-2254B) (PE-2254C) (PE-2254E)	1
1-2	331-2046-00	PLATE	1
1-3	335-5473-00	MAGNET	1
1-4	370-5673-00 370-5673-02	ESCUTCHEON ESCUTCHEON(PE-2254C only)	1
1-5	716-0872-00	PAD SCREW	1
2	310-1620-00 310-1620-03	UPPER CASE UPPER CASE(PE-2254C only)	1
3	311-1702-00 311-1702-01 311-1702-04	LOWER CASE(PE-2249) LOWER CASE(PE-2254B,E) LOWER CASE(PE-2254C)	1
4	347-5476-00	INSULATOR	1
5	371-3852-00	TRIM PLATE	1
6	382-4518-00	BUTTON(EJECT)	1
7	620-0726-01	DAMPER PLATE-L	1

NO.	PART NO.	DESCRIPTION	Q'TY
8	620-0727-01	DAMPER PLATE-R	1
9	622-1332-01	FL-PIN LEFT	1
10	622-1344-01	FL-PIN RIGHT	1
11	629-0060-00	DAMPER	4
12	716-1716-00 716-1716-01	SCREW SCREW-WHT(PE-2254C only)	12
13	750-3242-00	SPRING LEFT	1
14	750-3243-00	SPRING RIGHT	1
15	286-8785-00 286-8784-00 286-8770-00 286-8783-00 286-8786-00 286-8840-00 286-8781-00	SET PLATE(PE-2249B) SET PLATE(PE-2249C) SET PLATE(PE-2249E) SET PLATE(PE-2249K) SET PLATE(PE-2254B) SET PLATE(PE-2254C) SET PLATE(PE-2254E)	1
16	————	CHANGER MODULE	1
17	039-0925-00	CONNECTOR PWB	1
18	074-1126-01	OUTLET SOCKET(13P)	1
19	620-0732-00	DIN HOLDER	1
20	285-1426-00	GUIDE LABEL LASER (PE-2249E,2254E)	1
21	285-1691-00	CAUTION LABEL (PE-2249E,2254E)	1
22	075-0305-00	JACK(D-OUT) (RDC635,CDC635 only)	1

CD changer mechanism section

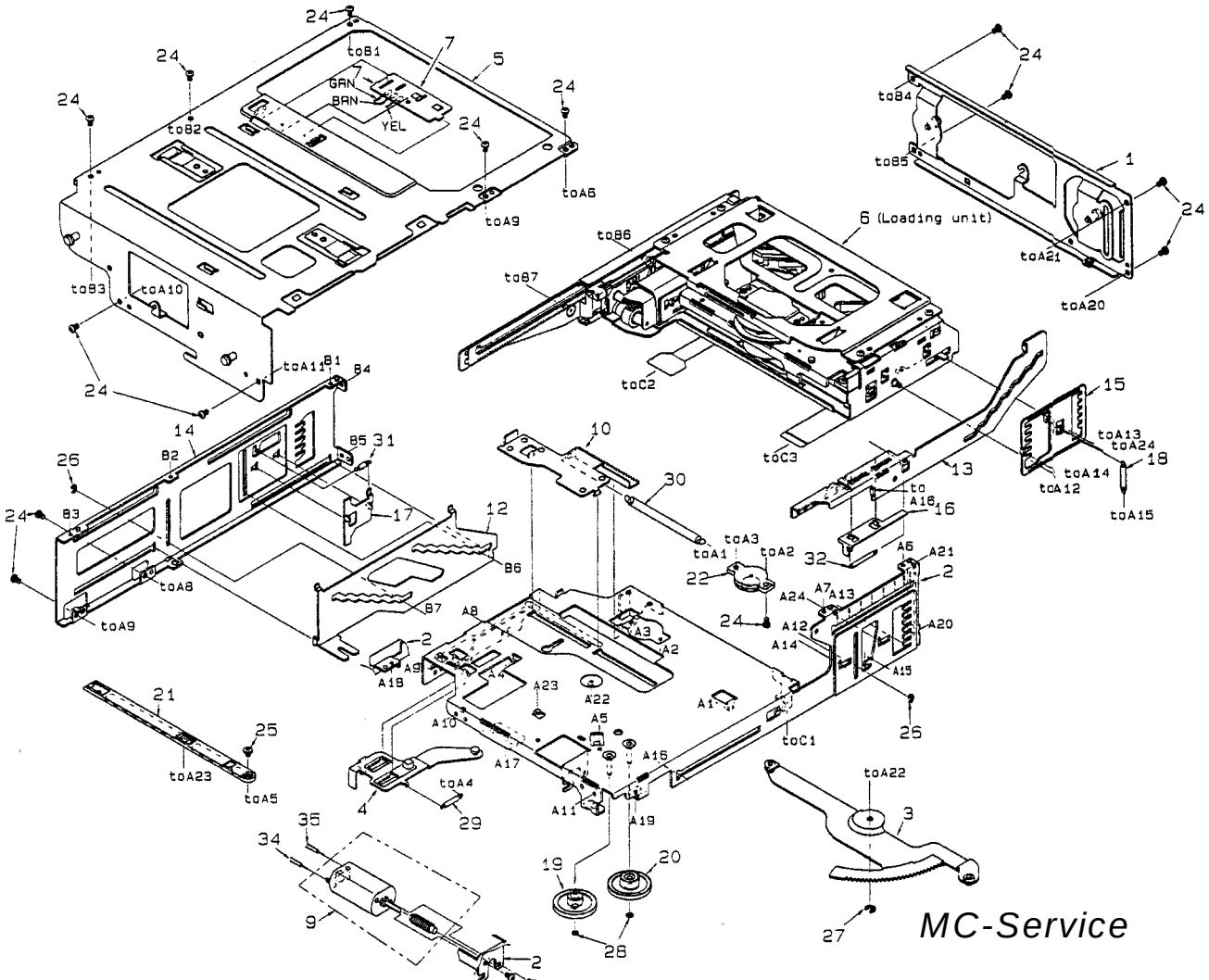

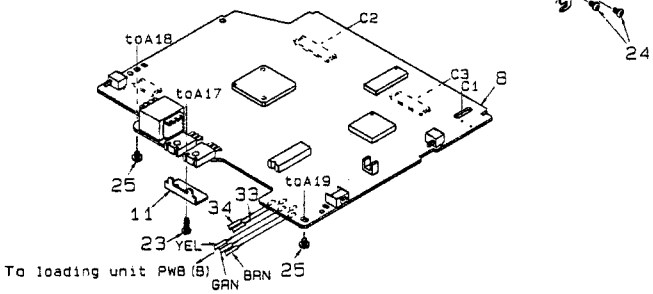

NO.	PART NO.	DESCRIPTION	Q'TY
1	966-0455-01	REAR PANEL-ASS'Y	1
2	966-0460-01	V-CHASSIS-ASS'Y	1
3	966-0461-00	UD-GEAR-P-ASS'Y	1
4	966-0462-01	MG-LO-P-ASS'Y-S	1
5	966-0463-01	UP-PLATE-ASS'Y-S	1
6	————	LOADING UNIT	1
7	039-0922-00	LOADING UNIT PWB (B)	1
8	039-0921-00	MAIN PWB	1
9	SMA-155-100	MOTOR-ASS'Y	1
10	620-0705-01	MG-EJ-PLATE	1
11	620-0707-00	HEAT SINK	1
12	620-0710-00	SLIDE PLATE-L-S	1
13	620-0711-01	SLIDE PLATE-S	1

NO.	PART NO.	DESCRIPTION	Q'TY
14	620-0712-00	SIDE PANEL-F	1
15	620-0731-01	GAP PLATE-R	1
16	620-0733-00	PO-SW-PLATE	1
17	620-0734-00	HOLD PLATE-L	1
18	750-3249-00	GAP SPRING-R	1
19	621-0377-00	V-HELICAL GEAR	1
20	621-0378-00	V-GEAR A	1
21	621-0380-01	MAGAZINE RAIL	1
22	629-0061-00	GEAR DAMPER	1
23	714-2006-81	MACHINE SCREW (M2×6)	1
24	716-1468-00	SCREW (M2×2)	16
25	716-1716-00	SCREW (M2×3)	3
26	743-1500-20	E-RING	2
27	743-2000-20	E-RING	1
28	746-0761-00	WASHER (ϕ 2.0)	2
29	750-3238-00	MG-L-SPRING-S	1
30	750-3239-00	MG-EJ-SPRING-S	1
31	750-3244-00	HOLD SPRING	1
32	750-3247-00	PO-SW-SPRING	1
33	800-4910-60	WIRE (BLK)	1
34	802-4910-60	WIRE (RED)	1

Loading unit section

NO.	PART NO.	DESCRIPTION	Q'TY
1	966-0457-01	L-CHASSIS-ASS'Y	1
2	966-0458-00	LOCK-ARM-ASS'Y	1
3	966-0464-00	CLAMP-SE-ASS'Y	1
4	966-0467-00	PUSH PLATE-ASS'Y	1
5	966-0468-00	SIDE PUSH-ASS'Y	1
6	968-0100-00	DRIVE UNIT	1
7	039-0922-00	LOADING UNIT PWB (A)	1
8	039-0924-00	FLEXIBLE PWB	1
9	610-0367-00	PUSH-P-ROLLER	1
10	620-0713-01	CLAMP-SW-PLATE	1
11	620-0715-01	HOLDER SHIFT-PL	1
12	620-0717-01	MOTOR-PLATE	1
13	620-0719-00	SWITCH PLATE	1
14	SMA-154-100	MOTOR-ASS'Y (LD)	1
15	621-0382-00	LO-HELICAL GEAR	1
16	621-0383-00	LOADING GEAR	1
17	621-0384-00	SWING GEAR	1
18	621-0385-00	PACK PINON	1
19	621-6386-01	CAM GEAR	1
20	621-0387-01	HOLDER-G-RAIL-L	1
21	621-0388-01	HOLDER-G-RAIL-R	1
22	622-1330-00	CAM-G-ROLLER	1
23	716-1468-00	SCREW	8
24	716-1716-00	SCREW	5
25	744-0039-00	E-RING	1

NO.	PART NO.	DESCRIPTION	Q'TY
26	745-0748-01	WASHER	1
27	746-0761-00	WASHER	3
28	746-0762-00	WASHER	1
29	750-3240-00	LOCK ARM SPRING	1
30	750-3245-00	GAP-L-SPRING	1
31	750-3246-00	LOCK-L-SPRING	1
32	750-3258-00	PUSH-P-SPRING	1
33	750-3259-00	SIDE-P-SPRING	1
34	750-3261-00	SWING SPRING	1
35	800-4906-60	VINYL-COAT-WIRE	1
36	802-4906-60	VINYL-COAT-WIRE	1

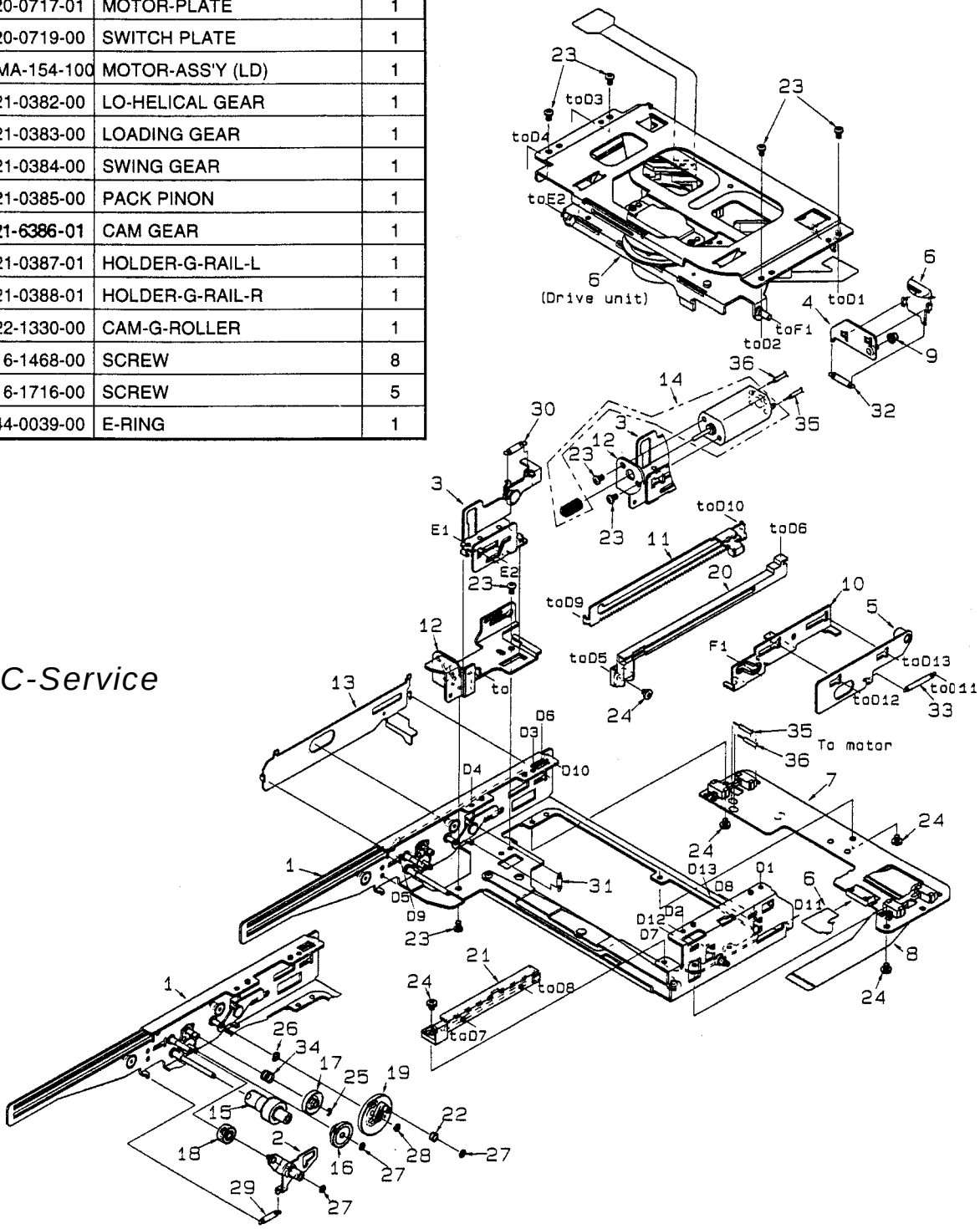

MC-Service

Drive unit section

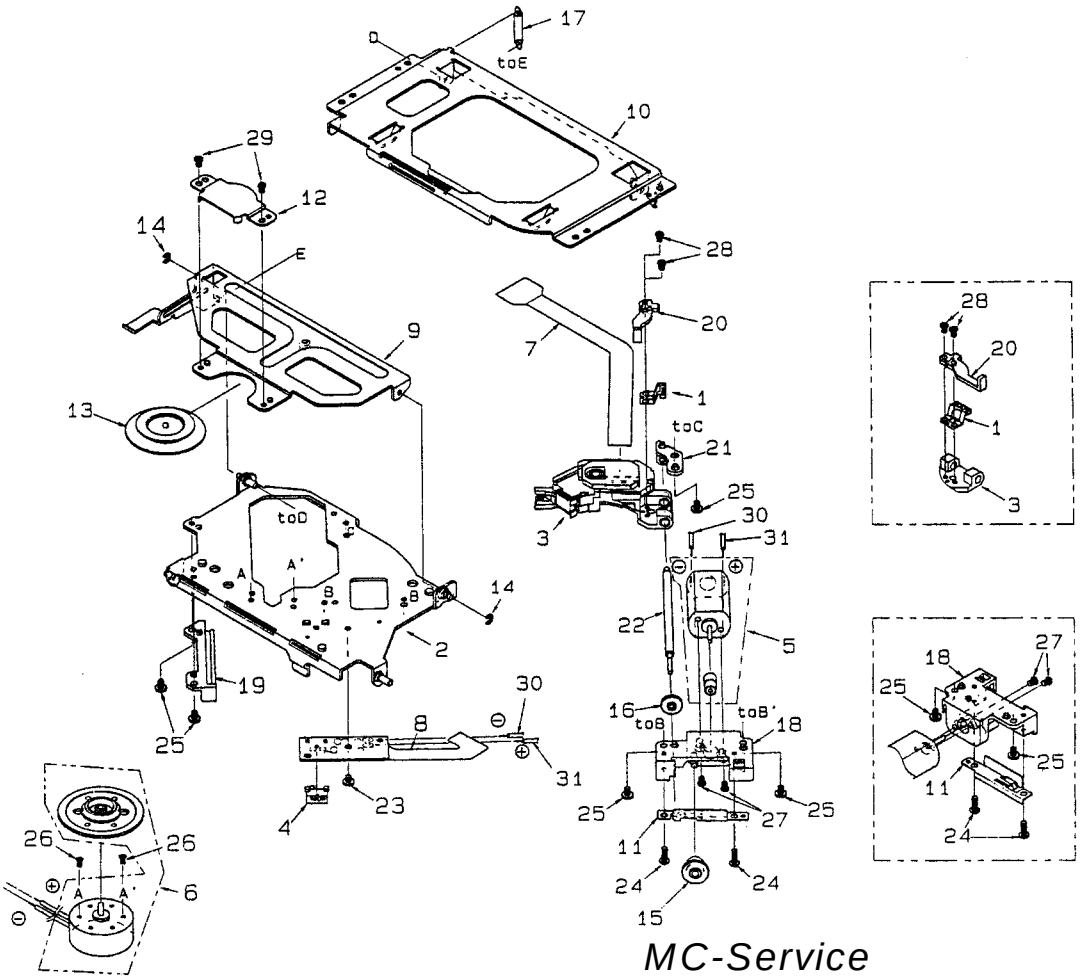

NO.	PART NO.	DESCRIPTION	Q'TY
1	966-0454-00	SH-RACK-ASS'Y	1
2	966-0456-03	DRIVE-PL-ASS'Y	1
3	969-0006-00	PICK UP UNIT	1
4	013-3953-01	SWITCH	1
5	SMA-146-100	MOTOR-ASS'Y (SL)	1
6	SMA-156-100	MOTOR-ASS'Y (SP)	1
7	039-0923-00	FLEXIBLE PWB	1
8	039-0926-00	DRIVE UNIT PWB	1
9	620-0721-00	CLAMP ARM	1
10	620-0722-00	L-UPPER PLATE	1
11	620-0723-01	SCREW PUSH PLT	1
12	620-0724-00	CLAMPER PLATE	1
13	621-0205-02	CLAMPER RING	1
14	743-1500-20	E-RING	2
15	621-0255-02	SECOND GEAR	1
16	621-0256-01	LS-GEAR	1

NO.	PART NO.	DESCRIPTION	Q'TY
17	750-3241-00	CLAMP A SPRING	1
18	621-0389-01	MOTOR HOLDER	1
19	621-0390-00	PICK UP GUIDE	1
20	621-0391-01	SCREW-HOL-BASE	1
21	621-0392-00	LS-HOLDER-R	1
22	624-0017-00	LEAD SCREW	1
23	716-0484-10	SCREW	1
24	716-0675-00	SCREW	2
25	716-1716-00	SCREW	5
26	716-1733-00	SCREW	2
27	732-2004-11	LEAD SCREW	2
28	739-1735-17	PRECISION SCREW	2
29	739-2020-17	PRECISION SCREW	2
30	801-4912-60	VINYL-COAT-WIRE	1
31	803-4910-60	VINYL-COAT-WIRE	1

■ELECTRICAL PARTS LIST

Main PWB section

REF No.	PART No.	DESCRIPTION
C 101	183-3363-21	10V33 μF
C 102	178-1032-78	0.01 μF
C 103	183-3363-21	10V33 μF
C 104	178-1032-78	0.01 μF

REF No.	PART No.	DESCRIPTION
C 105	183-3363-21	10V33 μF
C 106	178-1032-78	0.01 μF
C 107	183-1073-12	6.3V100 μF
C 108	178-1032-78	0.01 μF

REF No.	PART No.	DESCRIPTION
C 109	176-3901-00	39pF CI
C 110	176-2096-00	2pF CJ
C 114	178-2212-78	220pF
C 115	178-1042-78	0.1 μF

REF No.	PART No.	DESCRIPTION
C 116	178-2212-78	220pF
C 117	178-1032-78	0.01 μF
C 118	178-4745-79	0.47 μF
C 119	178-1032-78	0.01 μF
C 120	178-1042-78	0.1 μF
C 121	178-1522-78	1500pF
C 122	178-4732-78	0.047 μF
C 123	178-1042-78	0.1 μF
C 124	178-1032-78	0.01 μF
C 125	178-1032-78	0.01 μF
C 126	176-1007-00	10pF CH
C 127	178-4745-79	0.47 μF
C 128	178-1032-78	0.01 μF
C 129	178-1032-78	0.01 μF
C 130	176-1511-00	150pF CH
C 131	178-6812-78	680pF
C 132	178-1032-78	0.01 μF
C 133	176-1501-00	15pF CH
C 134	176-1501-00	15pF CH
C 135	178-1032-78	0.01 μF
C 136	176-1511-00	150pF CH
C 137	178-6812-78	680pF
C 138	178-1032-78	0.01 μF
C 139	178-1032-78	0.01 μF
C 140	178-1032-78	0.01 μF
C 141	183-1063-31	16V10 μF
C 142	178-1032-78	0.01 μF
C 143	178-1032-78	0.01 μF
C 144	178-4722-78	4700pF
C 201	184-4773-31	16V470 μF
C 202	173-1021-11	1000pF
C 203	178-1032-78	0.01 μF
C 204	042-0452-01	10V220 μF
C 205	178-1032-78	0.01 μF
C 206	042-0452-01	10V220 μF
C 207	178-1032-78	0.01 μF
C 208	183-1073-12	6.3V100 μF
C 209	183-1073-12	6.3V100 μF
C 210	183-1063-31	16V10 μF
C 211	178-1032-78	0.01 μF
C 212	178-1032-78	0.01 μF
C 213	172-1041-11	0.1 μF
C 214	178-1032-78	0.01 μF
C 215	176-1011-00	100pF CH
C 216	176-1201-00	12pF CH
C 217	178-1032-78	0.01 μF
C 218	183-3363-21	10V33 μF
C 219	183-3363-21	10V33 μF
C 220	176-4701-00	47pF CH
C 221	176-4701-00	47pF CH
C 222	183-3363-21	10V33 μF
C 223	173-1021-11	1000pF
C 224	183-3363-21	10V33 μF
C 225	173-1021-11	1000pF
C 226	178-1032-78	0.01 μF
C 227	183-1073-12	6.3V100 μF
C 228	183-1073-12	6.3V100 μF
C 229	172-1041-11	0.1 μF
C 230	172-1041-11	0.1 μF
D 101	001-0330-00	1SS119
D 102	001-0377-39	MA4068H
D 103	001-0377-33	MA4056H
D 104	001-0563-00	GL380
D 105	001-0563-00	GL380
D 201	001-0466-00	S5688B
D 202	001-0377-47	MA4091M
D 203	001-0377-45	MA4082H

REF No.	PART No.	DESCRIPTION
D 204	001-0377-31	MA4056L
D 205	001-0330-00	1SS119
D 206	001-0503-33	HZS6B2L
D 207	001-0330-00	1SS119
D 208	001-0423-24	MA4091
D 209	001-0423-24	MA4091
D 210	001-0423-24	MA4091
D 211	001-0330-00	1SS119
D 212	001-0330-00	1SS119
D 213	001-0330-00	1SS119
D 214	001-0330-00	1SS119
D 215	001-0330-00	1SS119
IC 101	051-5703-00	CXA1791M
IC 102	051-6318-00	CXD2548R
IC 103	051-6015-05	BA6392FP
IC 104	051-1408-00	LB1649
IC 201	052-5019-00	μPD78013GC-769-AB8
IC 202	051-7400-06	HD74LS07FP
IC 203	051-0857-05	TC74HC00AF
IC 204	051-5806-00	GP1S94
IC 205	051-0350-55	NJM4558M
IC 206	051-0840-10	MN1280-L
L 101	010-2230-72	10 μH
M 101	SMA-155-100	UP/DOWN
Q 101	101-1237-50	2SB1237QR
Q 201	103-1683-50	2SD1683ST
Q 202	125-0002-02	RN2402
Q 203	125-2004-02	RN1402
Q 204	103-1683-50	2SD1683ST
Q 205	125-0002-02	RN2402
Q 206	125-2004-02	RN1402
Q 207	103-1858-50	2SD1858Q.R
Q 208	103-1858-50	2SD1858Q.R
Q 209	100-1586-50	2SA1586Y,G
Q 210	125-2004-02	RN1402
Q 211	125-0027-01	UN6111
Q 212	125-2004-02	RN1402
Q 213	100-1048-50	2SA1048Y,GR
Q 214	125-0002-02	RN2402
Q 215	103-1450-50	2SD1450S.T
Q 216	103-1450-50	2SD1450S.T
R 101	117-1011-10	1/10W 100Ω
R 102	117-1341-10	1/10W 130kΩ
R 103	117-8241-10	1/10W 820kΩ
R 104	117-8241-10	1/10W 820kΩ
R 105	117-1341-10	1/10W 130kΩ
R 106	117-3331-10	1/10W 33kΩ
R 107	117-3331-10	1/10W 33kΩ
R 108	117-1001-10	1/10W 10Ω
R 109	117-6821-10	1/10W 6.8kΩ
R 110	117-1821-10	1/10W 1.8kΩ
R 111	117-3321-10	1/10W 3.3kΩ
R 112	117-1031-10	1/10W 10kΩ
R 113	117-1331-15	1/10W 13kΩ
R 114	117-2731-10	1/10W 27kΩ
R 120	117-3631-10	1/10W 36kΩ
R 121	117-1241-10	1/10W 120kΩ
R 122	117-3631-10	1/10W 36kΩ
R 123	117-1031-10	1/10W 10kΩ
R 124	117-1041-10	1/10W 100kΩ
R 125	117-1051-10	1/10W 1MΩ
R 126	117-1031-10	1/10W 10kΩ
R 127	117-6821-10	1/10W 6.8kΩ
R 128	117-3321-10	1/10W 3.3kΩ
R 129	117-1041-10	1/10W 100kΩ
R 130	117-1051-10	1/10W 1MΩ

REF No.	PART No.	DESCRIPTION
R 131	117-4741-10	1/10W 470kΩ
R 132	117-3331-10	1/10W 33kΩ
R 133	117-1041-10	1/10W 100kΩ
R 134	117-1231-10	1/10W 12kΩ
R 135	117-1231-10	1/10W 12kΩ
R 136	117-1231-10	1/10W 12kΩ
R 137	117-4711-10	1/10W 470Ω
R 138	117-1231-10	1/10W 12kΩ
R 139	117-1231-10	1/10W 12kΩ
R 140	117-1231-10	1/10W 12kΩ
R 141	117-1811-10	1/10W 180Ω
R 142	117-1031-10	1/10W 10kΩ
R 143	117-8231-10	1/10W 82kΩ
R 144	117-4731-10	1/10W 47kΩ
R 201	117-2711-10	1/10W 270Ω
R 202	111-2211-81	1/2WS 220Ω
R 203	111-1001-81	1/2WS 10Ω
R 204	117-1211-10	1/10W 120Ω
R 205	117-1231-10	1/10W 12kΩ
R 206	117-1021-10	1/10W 1kΩ
R 207	117-2231-10	1/10W 22kΩ
R 208	117-4711-10	1/10W 470Ω
R 209	117-1011-10	1/10W 100Ω
R 210	117-1021-10	1/10W 1kΩ
R 211	117-1021-10	1/10W 1kΩ
R 212	117-1021-10	1/10W 1kΩ
R 213	117-1021-10	1/10W 1kΩ
R 214	117-1041-10	1/10W 100kΩ
R 215	117-1041-10	1/10W 100kΩ
R 216	117-4731-10	1/10W 47kΩ
R 217	117-4731-10	1/10W 47kΩ
R 218	117-4731-10	1/10W 47kΩ
R 219	117-4731-10	1/10W 47kΩ
R 220	117-4731-10	1/10W 47kΩ
R 221	117-4731-10	1/10W 47kΩ
R 222	117-1031-10	1/10W 10kΩ
R 223	117-1031-10	1/10W 10kΩ
R 224	117-1041-10	1/10W 100kΩ
R 225	117-1041-10	1/10W 100kΩ
R 226	117-4731-10	1/10W 47kΩ
R 227	117-2711-10	1/10W 270Ω
R 228	117-1021-10	1/10W 1kΩ
R 229	117-1031-10	1/10W 10kΩ
R 230	117-1031-10	1/10W 10kΩ
R 231	117-1231-10	1/10W 12kΩ
R 232	117-1231-10	1/10W 12kΩ
R 233	117-2211-10	1/10W 220Ω
R 234	117-4731-10	1/10W 47kΩ
R 235	117-2211-10	1/10W 220Ω
R 236	117-4731-10	1/10W 47kΩ
R 237	117-1031-10	1/10W 10kΩ
R 238	117-1031-10	1/10W 10kΩ
R 239	117-1031-10	1/10W 10kΩ
R 240	117-8221-10	1/10W 8.2kΩ
R 241	117-1031-10	1/10W 10kΩ
R 242	117-1031-10	1/10W 10kΩ
R 243	117-1011-10	1/10W 100Ω
R 244	117-4731-10	1/10W 47kΩ
R 245	117-4731-10	1/10W 47kΩ
R 246	117-2211-10	1/10W 220Ω
R 247	117-2211-10	1/10W 220Ω
S 201	013-6100-10	
S 202	013-7204-00	SPPB64
S 203	013-3989-00	
X 101	061-3038-00	HC49 16.9344MHz
X 201	060-0319-00	4.915MHz

Loading unit PWB(A) section

REF No.	PART No.	DESCRIPTION
M 501	SMA-154-100	LOADING
S 501	013-3953-01	

REF No.	PART No.	DESCRIPTION
S 502	013-3953-01	
S 503	013-3953-01	

REF No.	PART No.	DESCRIPTION
S 504	013-3953-01	

Loading unit PWB(B) section

REF No.	PART No.	DESCRIPTION
Q 501	060-0252-01	

REF No.	PART No.	DESCRIPTION
Q 502	060-0252-01	

Drive unit PWB section

REF No.	PART No.	DESCRIPTION
M 601	SMA-146-100	SLED

REF No.	PART No.	DESCRIPTION
M 602	SMA-156-100	SPINDLE

REF No.	PART No.	DESCRIPTION
S 601	013-3953-01	

■CIRCUIT DIAGRAM

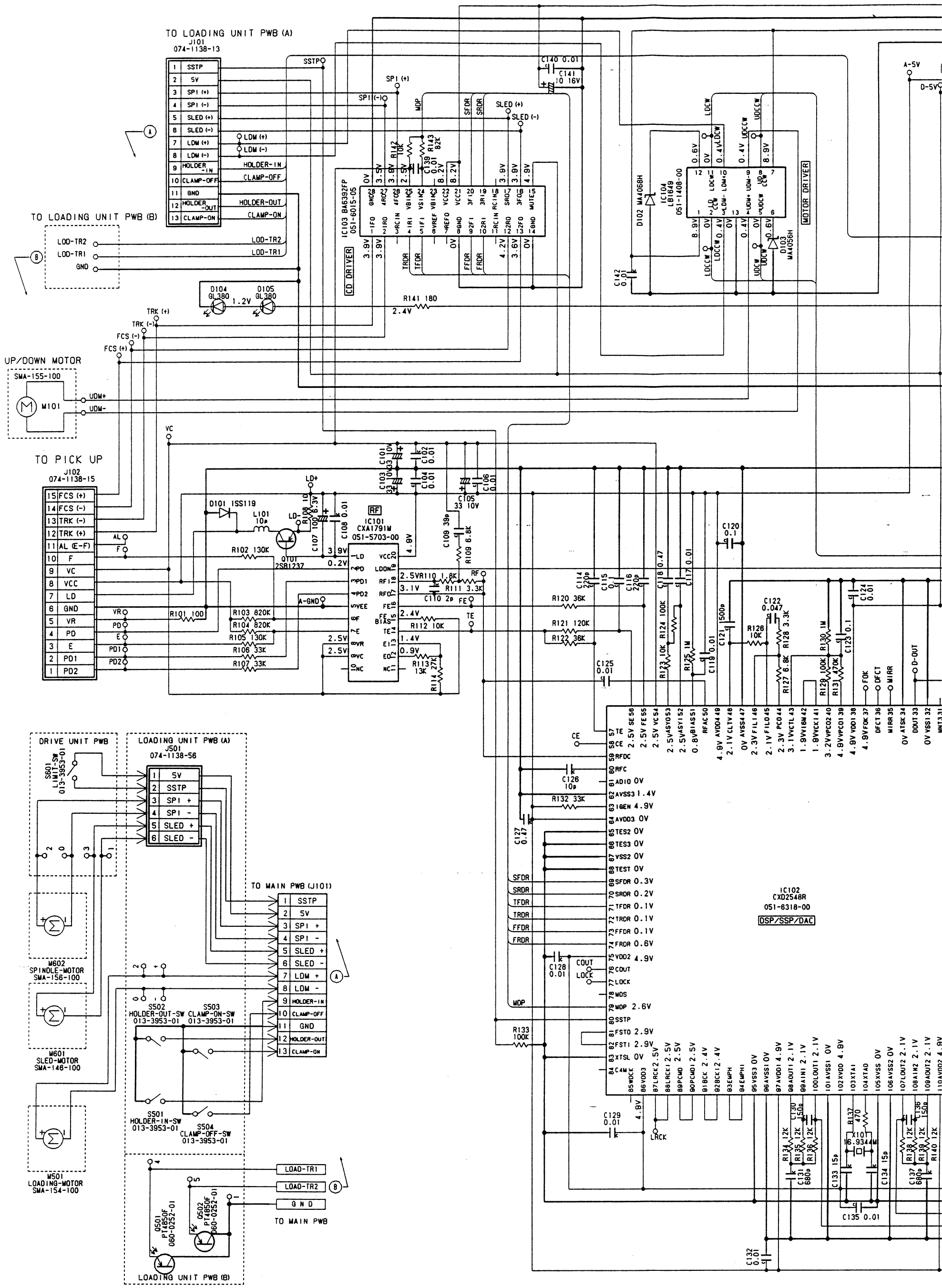

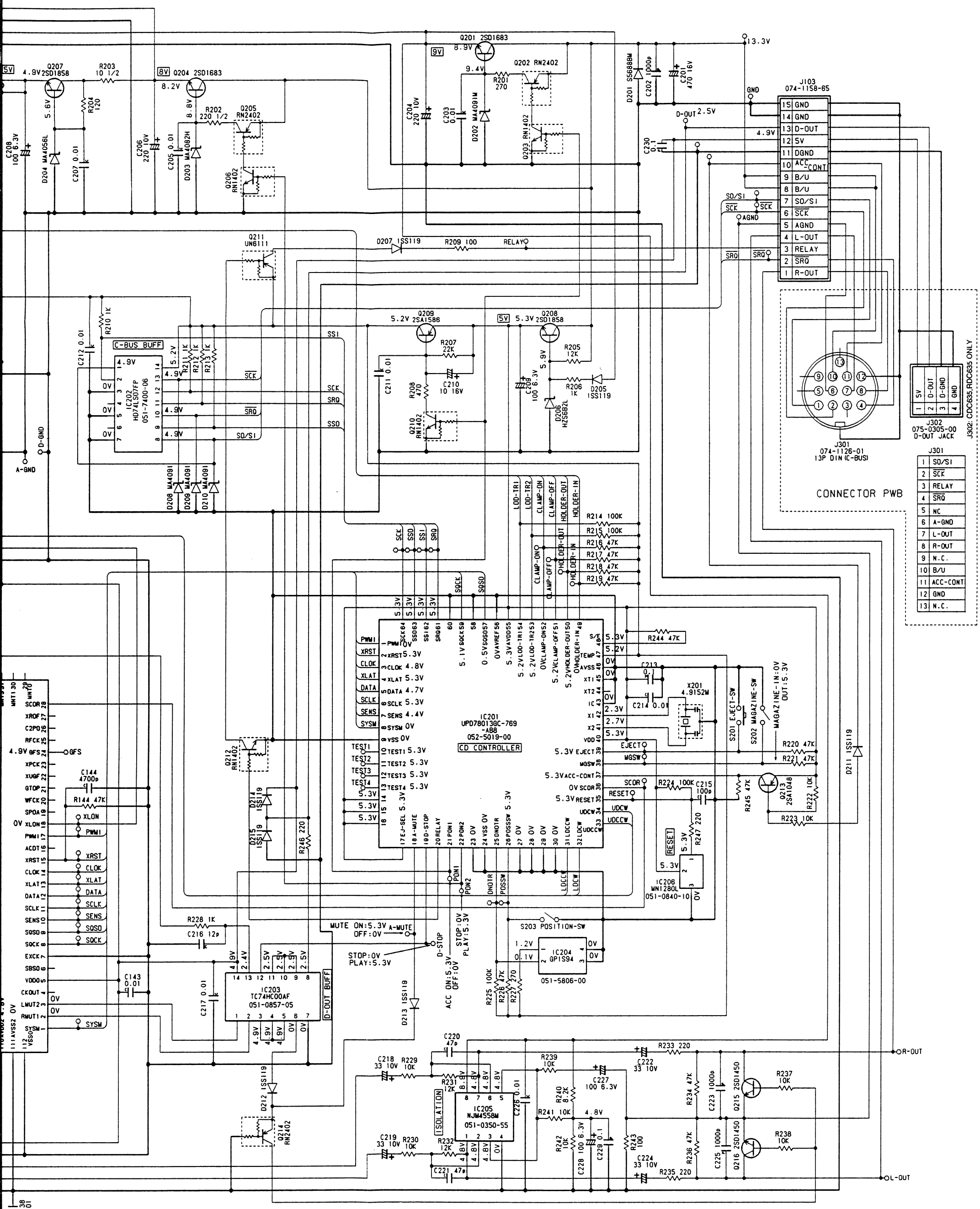
IC201
UPD78013GC-769
-AB8
052-5019-00
CD CONTROLLER
IC202
HD74LS07FP
051-7400-06
C-BUS BUFF
IC203
TC74HC00AF
051-0857-05
D-OUT BUFF
IC204
GP1S94
051-5806-00
IC205
NJM4558M
051-0350-55
ISOLATION
IC206
MN1280L
051-0840-10
J103
074-1158-65
J301
074-1126-01
13P DIN (C-BUS)
J302
075-0305-00
D-OUT JACK
J302: CDC635,RDC635 ONLY
CONNECTOR PWB
S201 EJECT-SW
S202 MAGAZINE-SW
S203 POSITION-SW
MAGAZINE-IN:0V
OUT:5.3V
MUTE ON:5.3V
OFF:0V
A-MUTE
STOP:0V
PLAY:5.3V
D-STOP
ACC ON:5.3V
OFF:0V
RELAY
R-OUT
L-OUT
A-GND
D-GND
GND
D-OUT
AGND
RESET
X201
4.9152M

■PRINTED WIRING BOARD

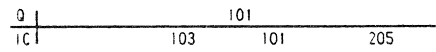

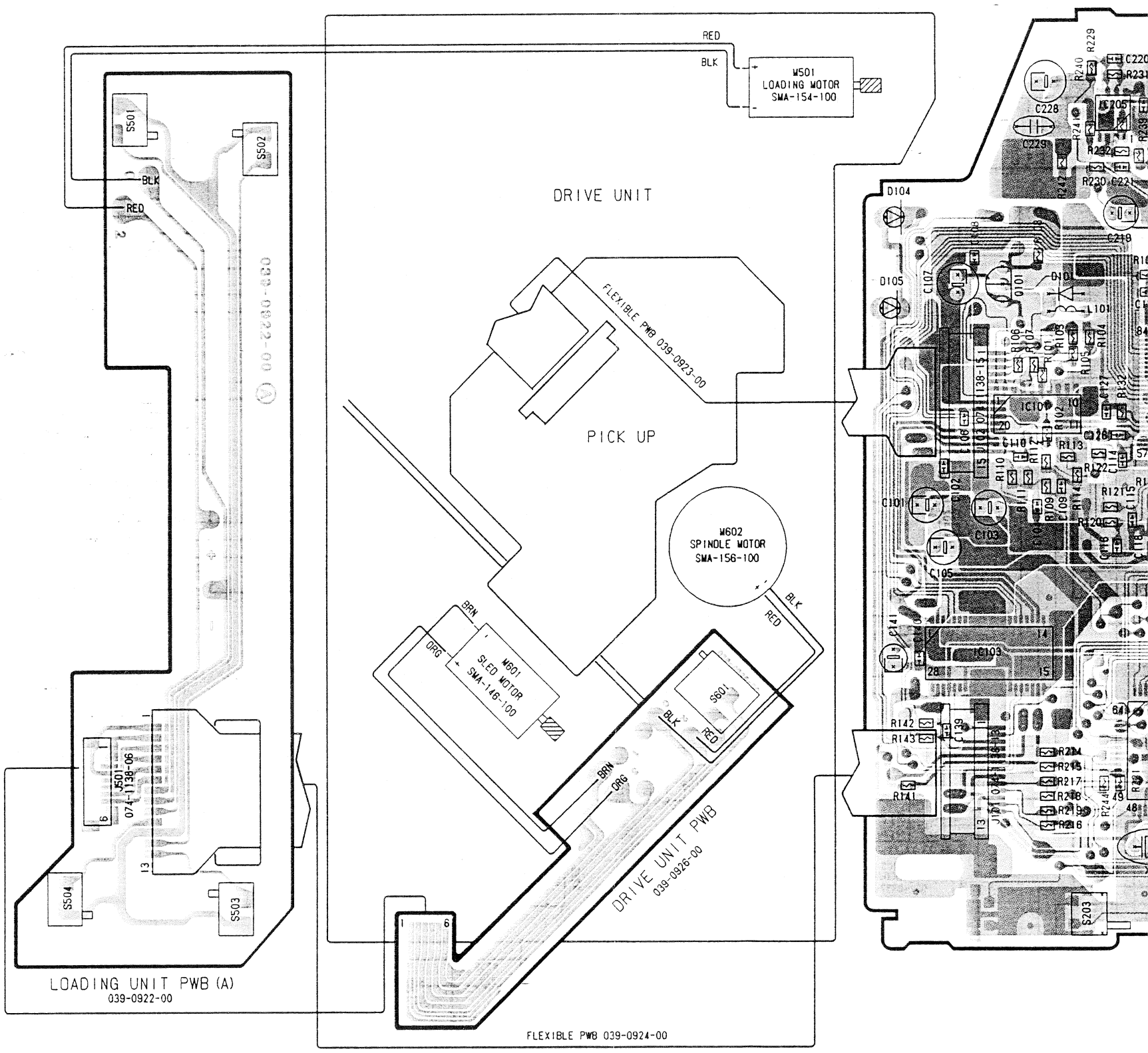

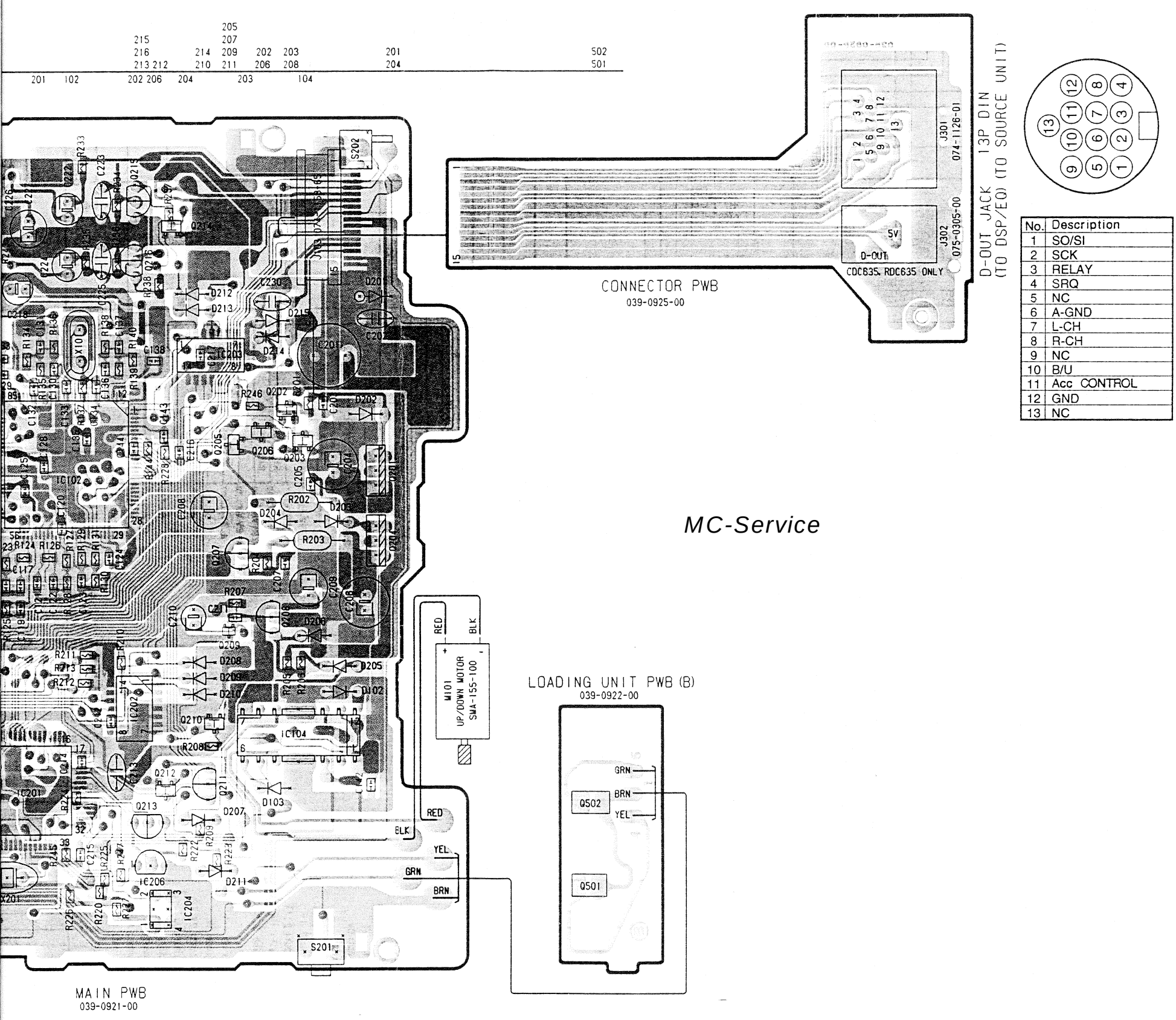

No.	Description
1	SO/SI
2	SCK
3	RELAY
4	SRQ
5	NC
6	A-GND
7	L-CH
8	R-CH
9	NC
10	B/U
11	Acc CONTROL
12	GND
13	NC

MC-Service

443

clarion

Clarion Co., Ltd.
Export Division - 22-3, Shibuya 2-chome, Shibuyaku, Tokyo, 150-8335 Japan Tel: 03-3400-1121
Service Dept.- 50 kamitoda,Toda-shi,Saitama,335-8511 Japan Tel: 048-443-1111 FAX:048-433-6996

Published by Service Dept.
298-5651-00 Feb.1998Ⓑ
Printed in Japan

Service Manual

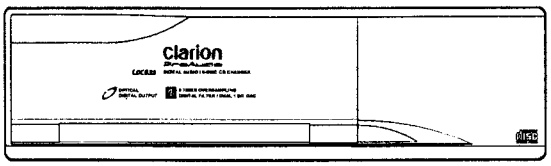

MC-Service

6 Disc CD Changer

Model RDC635
(PE-2249B-B S/No. 131701~)

Model CDC635
(PE-2249C-B S/No. 126641~)
(PE-2249E-B S/No. 125741~)
(PE-2249K-D S/No. 128641~)

Model RDC634
(PE-2254B-B S/No. 196851~)

Model CDC634
(PE-2254E-C S/No. 199251~)

MARINE

Model M635
(PE-2254C-B S/No. 197851~)

■ORIGINAL SERVICE MANUAL

This additional service manual is designed to be used together with Model RDC635,CDC635,RDC634 and M635.* 443

Original model	Manual No.
RDC635 (PE-2249B-A) CDC635 (PE-2249C-A) (PE-2249E-A) (PE-2249K-A) RCD634 (PE-2254B-A) (PE-2254E-A) M635 (PE-2254C-A)	298-5588-00

■DIFFERENCE FROM ORIGINAL MODEL

These models were changed into the one with the CD-R replay function.

■DESTINATION

For North America
RDC635(PE-2249B-B) with digital outpu
CDC635(PE-2249C-B) with digital outpu
RDC634(PE-2254B-B)
M635(PE-2254C-B)

For Europe
CDC635(PE-2249E-B) with digital outpu
CDC634(PE-2254E-C)

For Asia,Oceania and Africa
CDC635(PE-2249K-D) with digital outpu

■COMPONENTS

PE-2249B-B / C-B / E-B / K-D
PE-2254B-B / C-B / E-C

Main unit	————	1
CD magazine (for PE-2249B-B C-B K-D) (for PE-2254B-B C-B)	CCA-335-201	1
CD magazine (for PE-2249E-B) (for PE-2254E-C)	CCA-335-301	1
Mounting bracket with bolt	330-9725-01	2
Mounting bracket (for PE-2249B-B C-B E-B) (for PE-2254B-B C-B E-C)	300-9811-01	2
Mounting bracket (for PE-2254K-D)	300-9811-00	2
Lock screw	716-1793-00	3
Extension lead(13P DIN)	854-3227-00	1
Parts bag	————	
Clamp	321-0774-00	1
Lead holder	335-0833-01	2
Machine screw	714-5006-79	1
Wing nut(M6)	722-0545-00	4
D-sems-hex bolt	734-5008-37	4
Parts bag	————	
Cushion rubber	345-7651-00	2

■ To engineers in charge of repair or inspection of our products.

Before repair or inspection,make sure to follow the instructions so that customers and Engineers in charge of repair or inspection can avoid suffering any risk or injury.

1. Use specified parts.
   The system uses parts with special safety features against fire and voltage.Use only parts with equivalent characteristics when replacing them.
   The use of unspecified parts shall be regarded as remodeling for which we shall not be liable.The onus of product liability (PL) shall not be our responsibility in cases where an accident or failure is as a result of unspecified parts being used.
2. Place the parts and wiring back in their original positions after replacement or re-wiring.
   For proper circuit construction,use of insulation tubes,bonding,gaps to PWB,etc,is involved.The wiring connection and routing to the PWB are specially planned using clamps to keep away from heated and high voltage parts.Ensure that they are placed back in their original positions after repair or inspection.
   If extended damage is caused due to negligence during repair,the legal responsibility shall be with the repairing company.
3. Check for safety after repair.
   Check that the screws,parts and wires are put back securely in their original position after repair.Ensure for safety reasons there is no possibility of secondary ploblems around the repaired spots.
   If extended damage is caused due to negligence of repair,the legal responsibility shall be with the repairing company.
4. Caution in removal and making wiring connection to the parts for the automobile.
   Disconnect the battery terminal after turning the ignition key off.If wrong wiring connections are made with the battery connected, a short circuit and/or fire may occur.If extensive damage is caused due to negligence of repair,the legal responsibility shall be with the repairing company.
5. Cautions regarding chips.
   Do not reuse removed chips even when no abnormality is observed in their appearance.Always replace them with new ones.(The chip parts include resistors,capacitors,diodes,transistors,etc).The negative pole of tantalum capacitors is highly susceptible to heat,so use special care when replacing them and check the operation afterwards.
6. Cautions in handling flexible PWB
   Before working with a soldering iron,make sure that the iron tip temperature is around 270℃.Take care not to apply the iron tip repeatedly(more than three times)to the same patterns.Also take care not to apply the tip with force.
7. Turn the unit OFF during disassembly and parts replacement.Recheck all work before you apply power to the unit.
8. Cautions in checking that the optical pickup lights up.
   The laser is focused on the disc reflection surface through the lens of the optical pickup. When checking that the laser optical diode lights up,keep your eyes more than 30cms away from the lens.Prolonged viewing of the laser within 30cms may damage your eyesight.
9. Cautions in handling the optical pickup
   The laser diode of the optical pickup can be damaged by electrostatic charge caused by your clothes and body.Make sure to avoid electrostatic charges on your clothes or body,or discharge static electricity before handling the optical pickup.

9-1. Laser diode
   The laser diode terminals are shorted for transportation in order to prevent electrostatic damage.After replacement,open the shorted circuit.When removing the pickup from the mechanism,short the terminals by soldering them to prevent this damage.

9-2. Actuator
   The actuator has a powerful magnetic circuit.If a magnetic material is put close to it.its characteristics will change.Ensure that no foreign substances enter through the ventilation slots in the cover.

9-3. Cleaning the lens
   Dust on the optical lens affects performance.To clean the lens,apply a small amount of isopropylalcohol to lens paper and wipe the lens gently.

■CAUTION

This equipment has been tested and found to comply with the limits for a Class B digital device, pursuant to Part 15 of the FCC Rules.
These limits are designed to provide reasonable protection against harmful interference in a residential installation. This equipment generates uses, and can radiate radio frequency energy and, if not installed and used in accordance with the instructions, may cause harmful interference to radio communications. However, there is no guarantee that interference will not occur in a particular installation. If this equipment does cause harmful interference to radio or television reception, which can be determined by turning the equipment off and on.

Bottom View of CD
Changer Unit(U.S. model)

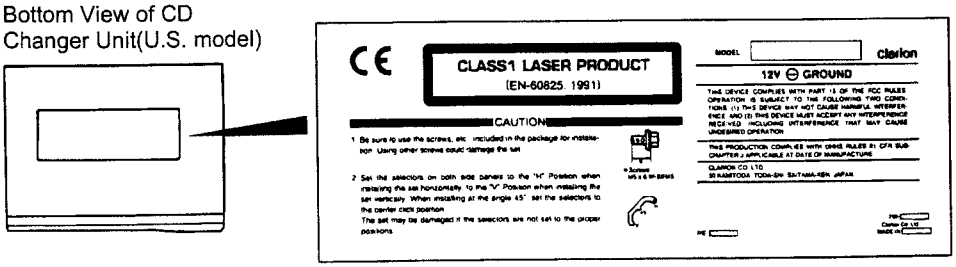

Top View of CD
Changer Unit(European model)

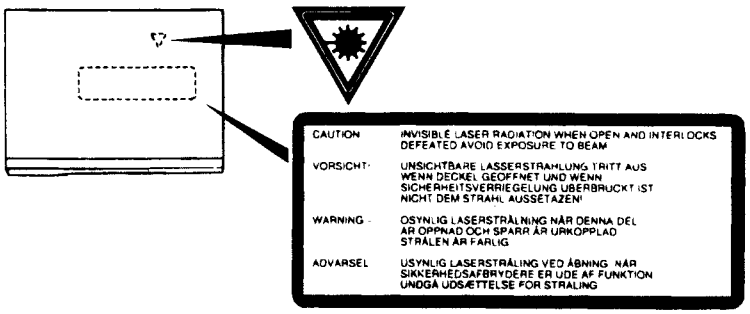

CAUTIONS:
This appliance contains a laser system and is classified as a"CLASS 1 LASER PRODUCT".

■EXPLANATION OF IC

■ μPD78013GC-798-AB8 052-5019-20 CD CONTROLLER

This is the performance improvement IC of 052-5019-00(μPD78013GC-769-AB8).
Refer to the terminal explanation of 052-5019-00(μPD78013GC-769-AB8).

■EXPLODED VIEW・PARTS LIST

CD changer mechanism section

Refet to the page 7 of the original manual.

NO.	PART NO.	DESCRIPTION	Q'TY
8	039-1180-00	MAIN PWB	1

Other parts are the same as the original model.

■ELECTRICAL PARTS LIST

Main PWB section

Refet to the page 9 of the original manual.

REF No.	PART No.	DESCRIPTION
C 191	178-1042-78	0.1 μF
IC 201	052-5019-20	μPD78013GC-798-AB8
R 102	117-1541-10	1/10W 150kΩ
R 103	117-9141-10	1/10W 910kΩ
R 104	117-1151-15	1/10W 1.1MΩ
R 105	117-1541-10	1/10W 150kΩ
R 191	117-2231-10	1/10W 22kΩ
R 192	117-4721-10	1/10W 4.7kΩ
R 201	111-2711-91	1/4WS 270Ω

Other parts are the same as the original model.

■CIRCUIT DIAGRAM

Refet to the page 11 of the original manual.

The changed parts are as follows.

Addition
- C191 0.1 μF
- R191 22kΩ
- R192 4.7kΩ

Replacement
- IC201 μPD78013GC-798-AB8
- R102 150kΩ
- R103 910kΩ
- R104 1.1MΩ
- R105 150kΩ
- R201 270Ω(Film resistor)

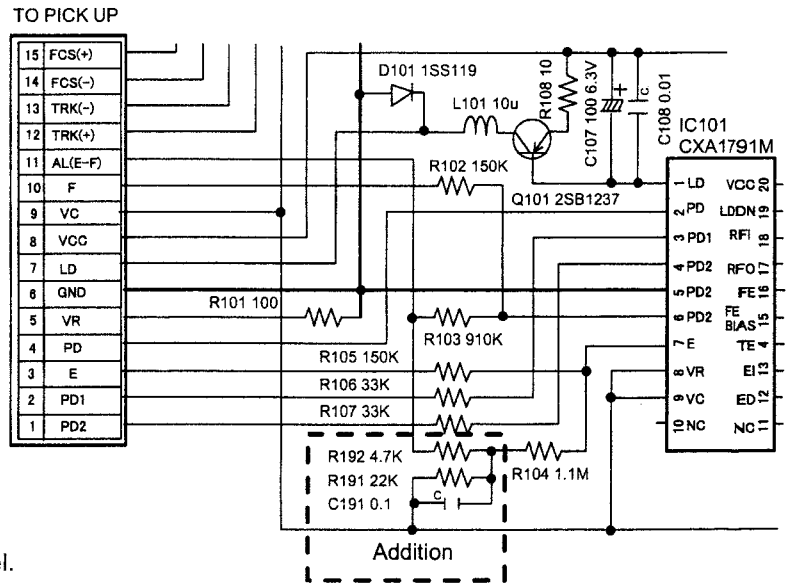

Other parts are the same as the original model.