# XR-C650RDS

# SERVICE MANUAL

*AEP Model*
*UK Model*

| | |
|---|---|
| Model Name Using Similar Mechanism | XR-C750RDS/C850RDS |
| Tape Transport Mechanism Type | MG-52B-135 |

## SPECIFICATIONS

### Cassette player section

| | |
|---|---|
| Tape track | 4-track 2-channel stereo |
| Wow and flutter | 0.08% (WRMS) |
| Frequency response | 30 - 20,000 Hz |
| Signal-to-noise ratio | |

| Cassette type | Dolby B NR | Dolby NR off |
|---|---|---|
| TYPE II, III, IV | 67 dB | 61 dB |
| TYPE I | 64 dB | 58 dB |

### Tuner section

**FM**

| | |
|---|---|
| Tuning range | 87.5 - 108.0 MHz |
| Aerial terminal | External aerial connector |
| Intermediate frequency | 10.7 MHz |
| Usable sensitivity | 8 dBf |
| Selectivity | 75 dB at 400 kHz |
| Signal-to-noise ratio | 65 dB (stereo),<br>68 dB (mono) |
| Harmonic distortion at 1 kHz | 0.5% (stereo),<br>0.3% (mono) |
| Separation | 35 dB at 1 kHz |
| Frequency response | 30 - 15,000 Hz |
| Capture ratio | 2 dB |

**MW/LW**

| | |
|---|---|
| Tuning range | MW : 531 - 1,602 kHz<br>LW : 153 - 281 kHz |
| Aerial terminal | External aerial connector |
| Intermediate frequency | 10.71 MHz/450 kHz |
| Sensitivity | MW : 30 µV<br>LW : 50 µV |

### Power amplifier section

| | |
|---|---|
| Outputs | Speaker outputs<br>(sure seal connectors) |
| Speaker impedance | 4 - 8 ohms |
| Maximum power output | 40 W × 4 (at 4 ohms) |

– Continued on next page –

## FM/MW/LW CASSETTE CAR STEREO

MICROFILM

SONY®

www.manualscenter.com

### General

| | |
|---|---|
| Outputs | Line outputs (2)<br>Power aerial relay control lead<br>Power amplifier control lead |
| Tone controls | Bass ± 8 dB at 100 Hz<br>Treble ± 8 dB at 10 kHz |
| Power requirements | 12 V DC car battery (negative ground) |
| Dimensions | Approx. 184 × 50 × 176 mm (w/h/d) |
| Mounting dimensions | Approx. 182 × 53 × 163 mm (w/h/d) |
| Mass | Approx. 1.3 kg |
| Supplied accessories | Parts for installation and connections (1 set)<br>Front panel case (1)<br>Rotary remote RM-X2S (1) |

*Design and specifications are subject to change without notice.*

Dolby noise reduction manufactured under license from Dolby Laboratories Licensing Corporation.
"DOLBY" and the double-D symbol DD are trademarks of Dolby Laboratories Licensing Corporation.

### Notes on Chip Component Replacement

- Never reuse a disconnected chip component.
- Notice that the minus side of a tantalum capacitor may be damaged by heat.

## TABLE OF CONTENTS

**1. GENERAL**
Location of Controls ..... 3
Setting the Clock ..... 3
Cassette Player ..... 3
Radio ..... 4
RDS ..... 5
Other Functions ..... 7
CD/MD Changer ..... 8
Connections ..... 11

**2. DISASSEMBLY**
2-1. Cover Assy ..... 13
2-2. Front Panel Assy ..... 13
2-3. Sub Panel Assy ..... 14
2-4. Mechanism Deck Block ..... 14
2-5. Heat Sink ..... 15
2-6. Main Board ..... 15

**3. ASSEMBLY OF MECHANISM DECK**
Alignment of Rotary Switch ..... 16
Gear (LDG-E) ..... 16
Chassis (S) Assy ..... 17
Lever (Mode) ..... 17
Lever (Pinch Selection) ..... 18
Head Plate Assy ..... 18
Lever (Pinch) Assy ..... 19
Housing ..... 19
Arm (Suction) ..... 20
Lever (LDG-A)/(LDG-B) ..... 20
Gear (LDG-FT) ..... 21
Guide (C) ..... 21

**4. MECHANICAL ADJUSTMENTS** ..... 22

**5. ELECTRICAL ADJUSTMENTS**
Deck Section ..... 22
Tuner Section ..... 23

**6. DIAGRAMS**
6-1. IC Pin Descriptions ..... 27
6-2. Block Diagram –TC Section– ..... 31
6-3. Block Diagram –Main Section– ..... 33
6-4. Printed Wiring Boards –Main Section– ..... 35
6-5. Schematic Diagram –Main Section– ..... 39
6-6. Printed Wiring Boards –Panel Section– ..... 44
6-7. Schematic Diagram –Panel Section– ..... 46

**7. EXPLODED VIEWS**
7-1. Chassis Section ..... 51
7-2. Front Panel Section ..... 52
7-3. Mechanism Deck Section-1 ..... 53
7-4. Mechanism Deck Section-2 ..... 54

**8. ELECTRICAL PARTS LIST** ..... 55

www.manualscenter.com



## Location of controls

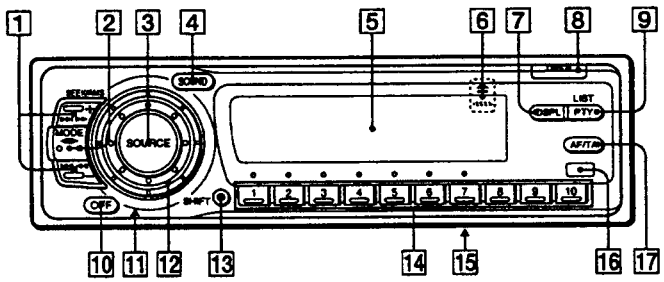


EN

Refer to the pages for details.

1 SEEK/AMS (seek/Automatic Music Sensor/manual search) button 5, 6, 7, 8, 9, 11, 15, 16, 17, 19
2 MODE (band select, changer select, tape transport direction) button 5, 7, 14, 16, 18
3 SOURCE (source select) button 5, 7, 14, 16, 18
4 SOUND button 13
5 Display window
6 ⏏ (eject) button (located on the front of the unit hidden by the front panel) 5
7 DSPL button (display mode change) button 6, 8, 14, 15, 18, 19
8 OPEN button 4, 5, 21
9 PTY/LIST button
PTY 11
Disc Memo 18
List-up 19
10 OFF button 4, 5
11 Reset button (located on the front of the unit hidden by the front panel) 4
12 Dial (volume/bass/treble/balance/fader control) 5, 18
13 SHIFT button
BTM 7, 10
SET UP 5, 12, 14
PLAY MODE 6, 7, 8, 9, 10, 15, 16, 17, 19
14 During radio reception:
Preset number buttons 7
During CD/MD playback:
Direct disc selection buttons 15
15 POWER SELECT switch (located on the bottom of the unit)
See "POWER SELECT switch" in the Installation/Connections manual.
16 Receptor for wireless remote
17 AF/TA button 9, 10



## Setting the clock

The clock has a 24-hour digital indication.

Example: Set the clock to 10:08

**1** Press (SHIFT), then press ② (SET UP).

Set Clock

❶ Press ④ (→).

Set 1:00

The hour digit flashes.

❷ Set the hour.

to go backward

to go forward

Set 10:00

❸ Press ④ (→).

Set 10:00

The minute digits flash.

❹ Set the minute.

to go backward

to go forward

Set 10:08

**2** Press (SHIFT).

10:08

The clock starts.

*Note*
*If the POWER SELECT switch on the bottom of the unit is set to the ❶ position, turn the power on first, then set the clock. To turn the power on, press (SOURCE).*

# Cassette Player

## Listening to a tape

**1** Press (OPEN) and insert a cassette.

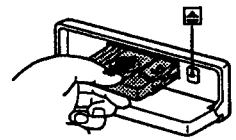

Playback starts automatically.

**2** Close the front panel.

If a cassette is already inserted, press (SOURCE) until "FWD" or "REV" appears to start playback.

The side facing up is being played.

FWD Play

The side facing down is being played.

REV Play

*Tips*
- *To change the tape transport direction, press (MODE) (◀II▶).*
- *"Metal" appears in the display when you insert a metal or $CrO_2$ tape (Auto Metal function).*

| To | Press |
|---|---|
| Stop playback | (OFF) |
| Eject the cassette | (OPEN) then ⏏ |

### Fast-winding the tape

During playback, press either side of (SEEK/AMS) for one second.

Fast-forward

Rewind

To start playback while fast-forwarding or rewinding, press (MODE) (◀II▶).

EN





This section extracted from instruction manual.

### Locating the beginning of a track — *Automatic Music Sensor (AMS)*

You can skip up to nine tracks at one time.

**During playback, press either side of (SEEK/AMS) momentarily.**

**To locate succeeding tracks**

**To locate preceding tracks**

***Note***
*The AMS function may not work when:*
- *the blanks between tracks are shorter than four seconds.*
- *there is noise between tracks.*
- *there are long sections of low volume or quiet sections.*

### Changing the displayed item

Each time you press (DSPL), the item changes as follows:

→ Tape playback → Clock → Frequency* →

* *While the AFTA function is activated.*

EN

## Playing tracks repeatedly

### — Repeat play

You can repeat play the current track.

**1 During playback press (SHIFT).**
Each time you press (SHIFT), only the items you can select light up.

**2 Press (6) (REP).**
Repeat play starts.

To go back to the normal playback mode, press (6) again.

**3 Press (SHIFT).**

## Playing a tape in various modes

You can play the tape in various modes:
- Intro (Intro Scan) lets you play the first 10 seconds of all the tracks.
- NR (Dolby NR) lets you select the Dolby* NR B system.
- ATA (Automatic Tuner Activation) turns on the tuner automatically while fast-winding the tape.
- B.Skip (Blank Skip) skips blanks longer than eight seconds.

* *Dolby noise reduction manufactured under license from Dolby Laboratories Licensing Corporation. "DOLBY" and the double-D symbol DD are trademarks of Dolby Laboratories Licensing Corporation.*

**1 Press (SHIFT), then press (3) (PLAY MODE) repeatedly until the desired play mode appears.**
Each time you press (3), the item changes as follows:

Intro → NR → ATA → B.Skip

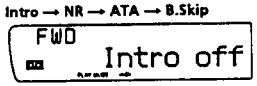


**2 Press (4) (→) to select the desired play mode setting (for example: on, NR B).**

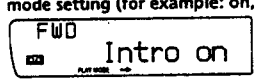


Playback starts.

**3 Press (SHIFT).**

To go back to the normal playback mode, select "off" in step 2 above.

## Memorising stations automatically

### — Best Tuning Memory (BTM)

The unit selects the stations with the strongest signals and memorises them. You can store up to 10 stations on each band (FM 1, FM 2, MW and LW).

**Caution**
When tuning in stations while driving, use Best Tuning Memory to prevent accidents.

**1 Press (SOURCE) repeatedly to select the tuner.**
Each time you press (SOURCE), the source changes as follows:

Tape ⟷ Tuner

**2 Press (MODE) repeatedly to select the desired band.**
Each time you press (MODE), the band changes as follows:

→ FM 1 → FM 2 → MW → LW →

**3 Press (SHIFT), then press (3) (PLAY MODE) repeatedly until "B.T.M" appears.**

**4 Press (4) (→) until "B.T.M" flashes.**
The unit stores stations in the order of their frequencies on the number buttons.
A beep sounds and the setting is stored.

**5 Press (SHIFT).**

***Notes***
- *The unit does not store stations with weak signals. If only a few stations are received, some number buttons remain empty.*
- *When a preset number is indicated in the display, the unit starts storing stations from the one currently displayed.*

## Memorising only the desired stations

You can store up to 10 stations on each band (20 for FM 1 and FM 2, 10 for MW or LW) in the order of your choice.

**1 Press (SOURCE) repeatedly to select the tuner.**

**2 Press (MODE) repeatedly to select the desired band.**

**3 Press either side of (SEEK/AMS) to tune in the station you want to store on the number button.**

**4 Keep the desired number button ((1) to (10)) pressed until "MEM" appears in the display.**

The number button indication appears in the display.

***Note***
*If you try to store another station on the same number button, the previously stored station will be erased.*

## Receiving the memorised stations

**1 Press (SOURCE) repeatedly to select the tuner.**

**2 Press (MODE) repeatedly to select the desired band.**

**3 Press the number button ((1) to (10)) momentarily where the desired station is stored.**

EN

www.manualscenter.com



### If you cannot tune in a preset station

**Press either side of (SEEK/AMS) momentarily to search for the station (automatic tuning).**
Scanning stops when the unit receives a station. Press either side of (SEEK/AMS) repeatedly until the desired station is received.

*Note*
*If the automatic tuning stops too frequently, press (SHIFT), then press (3) (PLAY MODE) repeatedly until "Local" (local seek mode) appears. Then press (4) (→) to select "Local on." Press (SHIFT).*
*Only the stations with relatively strong signals will be tuned in.*

*Tip*
*If you know the frequency of the station you want to listen to, press and hold down either side of (SEEK/AMS) for a few seconds until the desired frequency appears (manual tuning).*

EN

### If FM stereo reception is poor — Monaural Mode

1 **Press (SHIFT), then press (3) (PLAY MODE) repeatedly until "Mono" appears.**

2 **Press (4) (→) repeatedly until "Mono on" appears.**
The sound improves, but becomes monaural ("ST" disappears).

3 **Press (SHIFT).**

To go back to the normal mode, select "Mono off" in step 2 above.

### Changing the displayed item

Each time you press (DSPL), the item changes as follows:

**Station name ←→ Clock**



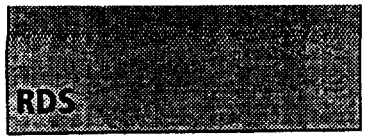


## Overview of the RDS function

The Radio Data System (RDS) is a broadcasting service that allows FM stations to send additional digital information along with the regular radio programme signal. Your car stereo offers you a variety of services. Here are just a few: re-tuning the same programme automatically, listening to traffic announcements and locating a station by programme type.

*Notes*
- *Depending on the country or region, not all of the RDS functions are available.*
- *RDS may not work properly if the signal strength is weak or if the station you are tuned to is not transmitting RDS data.*

## Displaying the station name

The name of the station currently received lights up in the display.

**Select an FM station.**
When you tune in an FM station that transmits RDS data, the station name appears in the display.

FM1 BBC 1 FM

*Note*
*The "•" indication means that an RDS station is being received.*

### Changing the displayed item

Each time you press (DSPL), the item changes as follows:

→ Frequency → Clock → Station name

*Note*
*"NO Name" appears if the received station does not transmit RDS data.*

## Re-tuning the same programme automatically

### — Alternative Frequencies (AF)

The Alternative Frequencies (AF) function automatically selects and re-tunes the station with the strongest signal in a network. By using this function, you can continuously listen to the same programme during a long-distance drive without having to re-tune the station manually.

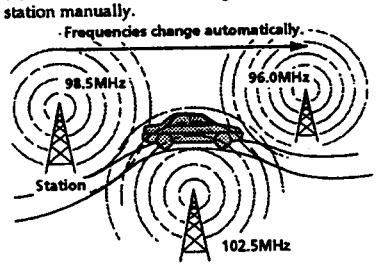


1 **Select an FM station.**

2 **Press (AF/TA) repeatedly until "AF on" appears.**
The unit starts searching for an alternative station with a stronger signal in the same network.

*Note*
*When there is no alternative station in the area and you do not need to search for an alternative station, turn the AF function off by pressing (AF/TA) repeatedly until "AF TA off" appears.*

### Changing the displayed item

Each time you press (AF/TA), the item changes as follows:

→ AF on → TA on → AF TA on* → AF TA off ←

** Select this to turn on both the AF and TA functions.*

*Notes*
- *"NO AF" and the station name flash alternately, if the unit cannot find an alternative station in the network.*
- *If the station name starts flashing after selecting a station with the AF function on, this indicates that no alternative frequency is available. Press (SEEK/AMS) while the station name is flashing (within eight seconds). The unit starts searching for another frequency with the same PI (Programme Identification) data ("PI seek" appears and no sound is heard). If the unit cannot find another frequency, "NO PI" appears, and the unit returns to the originally selected frequency.*

### Listening to a regional programme

The "REG on" (regional on) function lets you stay tuned to a regional programme without being switched to another regional station. (Note that you must turn the AF function on.) The unit is factory preset to "REG on," but if you want to turn off the function, do the following.

1 **Press (SHIFT), then press (3) (PLAY MODE) repeatedly until "REG" appears.**

2 **Press (4) (→) repeatedly until "REG off" appears.**

3 **Press (SHIFT).**
Note that selecting "REG off" might cause the unit to switch to another regional station within the same network.

To go back to the regional on setting, select "REG on" in step 2 above.

*Note*
*This function does not work in the United Kingdom and in some other areas.*

EN

Radio/RDS

### Local link function (United Kingdom only)

The Local Link function lets you select other local stations in the area, even though they are not stored on your number buttons.

1 **Press a number button that has a local station stored on it.**

2 **Within five seconds, press the number button of the local station again.**

3 **Repeat this procedure until the desired local station is received.**

## Listening to traffic announcements

The Traffic Announcement (TA) and Traffic Programme (TP) data let you automatically tune in an FM station that is broadcasting traffic announcements even though you are listening to other programme sources.

**Press (AF/TA) repeatedly until "TA on" or "AF TA on" appears.**
The unit starts searching for traffic information stations. "TP" appears in the display when the unit finds a station broadcasting traffic announcements. When the traffic announcement starts, "TA" flashes. The flashing stops when the traffic announcement is over.

*Tip*
*If the traffic announcement starts while you are listening to another programme source, the unit automatically switches to the announcement and goes back to the original source when the announcement is over.*

*Notes*
- *"NO TP" flashes for five seconds if the received station does not broadcast traffic announcements. Then, the unit starts searching for a station that broadcasts traffic announcements.*
- *When "EON" appears with "TP" in the display, the current station makes use of traffic announcements broadcast by other stations in the same network.*

### To cancel the current traffic announcement

**Press (AF/TA) momentarily.**
To cancel all traffic announcements, turn off the function by pressing (AF/TA) until "AF TA off" appears.

### Presetting the volume of traffic announcements

You can preset the volume level of the traffic announcements beforehand so you won't miss the announcement. When a traffic announcement starts, the volume will be automatically adjusted to the preset level.

**1 Select the desired volume level.**

**2 Press (AF/TA) for two seconds.**
"TA" appears and the setting is stored.

### Receiving emergency announcements

If an emergency announcement comes in while you are listening to the radio, the programme will be automatically switched to the announcement. If you are listening to a source other than the radio, the emergency announcements will be heard if you set AF or TA to on. The unit will then automatically switch to these announcements no matter what you are listening to at the time.

## Presetting the RDS stations with the AF and TA data

When you preset the RDS stations, the unit stores each station's data as well as its frequency, so you don't have to turn on the AF or TA function every time you tune in the preset station. You can select a different setting (AF, TA, or both) for each preset station, or the same setting for all preset stations.

### Presetting the same setting for all preset stations

**1 Select an FM band.**

**2 Press (AF/TA) repeatedly to select either "AF on," "TA on" or "AF TA on" (for both AF and TA functions).**
Note that selecting "AF TA off" stores not only RDS stations, but also non-RDS stations.

**3 Press (SHIFT), then press (3) (PLAY MODE) repeatedly until "B.T.M" appears.**

**4 Press (4) (→) until "B.T.M" flashes.**

**5 Press (SHIFT).**

### Presetting different settings for each preset station

**1 Select an FM band, and tune in the desired station.**

**2 Press (AF/TA) repeatedly to select either "AF on," "TA on" or "AF TA on" (for both AF and TA functions).**

**3 Press the desired number button for two seconds until "MEM" appears.**
Repeat from step 1 for presetting other stations.

*Tip*
*If you want to change the preset AF and/or TA setting after you tune in the preset station, you can do so by turning on/off the AF or TA function.*

## Locating a station by programme type

You can locate the station you want by selecting one of the programme types shown below.

*Note*
*If you are in a country or regions where EON data is not transmitted, you can use this function only for the stations you have tuned in once.*

| Programme types | Display |
|---|---|
| News | NEWS |
| Current Affairs | AFFAIRS |
| Information | INFO |
| Sports | SPORT |
| Education | EDUCATE |
| Drama | DRAMA |
| Culture | CULTURE |
| Science | SCIENCE |
| Varied | VARIED |
| Popular Music | POP M |
| Rock Music | ROCK M |
| Middle of the Road Music | M.O.R. M |
| Light Classical | LIGHT M |
| Classical | CLASSICS |
| Other Music Type | OTHER M |
| Weather | WEATHER |
| Finance | FINANCE |
| Children's programmes | CHILDREN |
| Social Affairs | SOCIAL A |
| Religion | RELIGION |
| Phone In | PHONE IN |
| Travel | TRAVEL |
| Leisure | LEISURE |
| Jazz Music | JAZZ |
| Country Music | COUNTRY |
| National Music | NATION M |
| Oldies Music | OLDIES |
| Folk Music | FOLK M |
| Documentary | DOCUMENT |
| Not specified | NONE |

*Note*
*You can not use this function in some countries where no PTY (Programme Type selection) data is available.*

**1 Press (PTY/LIST) during FM reception until "PTY" appears.**

PTY
INFO

The current programme type name appears if the station is transmitting the PTY data. "- - - - -" appears if the received station is not an RDS station, or if the RDS data has not been received.

**2 Press (PTY/LIST) repeatedly until the desired programme type appears.**
The programme types appear in the order shown in the above table. Note that you cannot select "NONE" (Not specified) for searching.

PTY
SPORT

**3 Press either side of (SEEK/AMS).**
The unit starts searching for a station broadcasting the selected programme type. When the unit finds the programme, the programme type appears again for five seconds. "NO" and the programme type flash for five seconds if the unit cannot find the programme type. It then returns to the previous station.

EN

RDS

www.manualscenter.com



EN

## Setting the clock automatically

The CT (Clock Time) data from the RDS transmission sets the clock automatically.

1 Press (SHIFT), then press (2) (SET UP) repeatedly until "CT" appears.

Set CT off

2 Press (4) (→) repeatedly until "CT on" appears.
The clock is set.

Set CT on

3 Press (SHIFT) to return to the normal display.

### To cancel the CT function

Select "CT off" in step 2 above.

*Notes*
- *The CT function may not work even though an RDS station is being received.*
- *There might be a difference between the time set by the CT function and the actual time.*



# Other Functions

## Using the rotary remote

The rotary remote works by pressing buttons and/or rotating controls.
You can control the optional CD and MD changer with the rotary remote.

### By pressing the button (the SOURCE button)

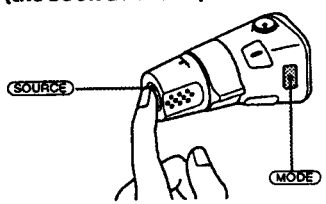


Each time you press (SOURCE), the source changes as follows:

Tuner → CD → MD → Tape

Pressing (MODE) changes the operation in the following ways
- the tape transport direction
- the band: FM1 → FM2 → MW → LW
- the CD changer: CD1 → CD2 → ....
- the MD changer: MD1 → MD2 → ....

*Tip*
*You can turn on this unit by pressing (SOURCE) on the rotary remote.*

### By rotating the control (the SEEK/AMS control)

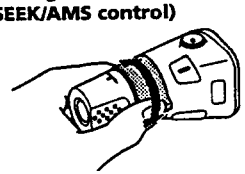

Rotate the control momentarily and release it to:
- Locate the beginnings of the tracks on the tape. Rotate and hold the control, and release it to fast-wind the tape. To playback, rotate and hold the control again, and release it.
- Locate a specific track on a disc. Rotate and hold the control until you locate the specific point in a track, then release it to start playback.
- Tune in stations automatically. Rotate and hold the control to tune in the specific station.

### By rotating the control while pushing in (the PRESET/DISC control)

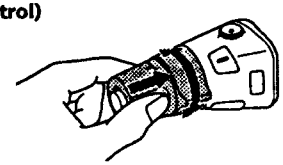

Push in and rotate the control to:
- Receive the stations memorised on the preset buttons.
- Change the disc.

### Other operations

Rotate the VOL control to adjust the volume.

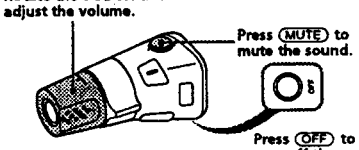


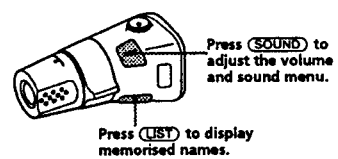


### Changing the operative direction

The operative direction of controls is factory preset as in the illustration below.

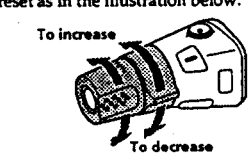


If you need to mount the rotary remote on the right of the steering column, you can reverse the operative direction of the controls.

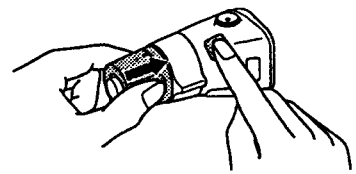

Press (DSPL) two seconds while pushing the VOL control.

*Tip*
*You can change the operative direction of controls with the unit, refer to "Changing the sound and display settings" (page 14).*

## Adjusting the sound characteristics

You can adjust the bass, treble, balance and fader.
Each source can store the bass and treble level respectively.

1 Select the item you want to adjust by pressing (SOUND) repeatedly.

VOL (volume) → BAS (bass) → TRE (treble) → BAL (balance) → FAD (fader)

2 Adjust the selected item by rotating the dial.
Adjust within three seconds after selection. (After three seconds, the dial works as the volume control dial.)

## Muting the sound

The unit decreases the volume automatically when a telephone call is received (Telephone-mute function).

EN

## Changing the sound and display settings

You can set:
- Clock (page 5)
- CT (Clock Time) (page 12)
- D. Info (Dual Information) to display the clock and the play mode at the same time (ON), or to display the information alternately (OFF).
- Amber/Green to change the illumination colour to amber or green.
- Dimmer to change the brightness of the display.
  — Select "Auto" to dim the display only when you turn the lights on.
  — Select "on" to dim the display.
- Contrast to adjust the contrast if the indications in the display are not recognizable because of the unit's installed position.
- Beep to turn on or off the beeps.
- RM (Rotary Remote) to change the operative direction of the controls of the rotary remote.
  — Select "norm" to use the rotary remote in the factory preset position.
  — Select "rev" when you mount the rotary remote on the right sife of the steering column.
- Loud (Loudness) to enjoy bass and treble even at low volume. The bass and treble will be reinforced.
- A. Scrl (Auto Scroll)

**Note**
*The displayed item will differ depending on the source.*

**1** **Press (SHIFT), then press (2) (SET UP).**

**2** **Press (2) (SET UP) repeatedly until the desired setting mode appears.**
Each time you press (2) (SET UP), the item changes as follows:
**Clock → CT → D.Info → Amber/Green → Dimmer → Contrast → Beep → RM → Loud → A.Scrl**

**3** **Press (4) (→) to select the desired setting (for example: "on" or "off").**
For the "Contrast" setting, pressing (4) (→) makes the contrast higher, and pressing (1) (←) makes the contrast lower.

**4** **Press (SHIFT).**
When the mode setting is complete, the normal playback mode appears.

## Playing a CD or MD

**1** **Press (SOURCE) repeatedly to select the CD or MD.**

**2** **Press (MODE) until the desired changer indication appears in the display.**
CD/MD playback starts.

### Changing the displayed item

Each time you press (DSPL) during CD/MD playback, the item changes as follows:

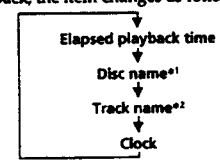


*1 *If you have not labeled the CD, "NO Name" appears in the display. If there is no prerecorded name for an MD, "NO D. Name" appears in the display.*
*2 *If the track name of an MD is not prerecorded, "NO T. Name" appears in the display.*

*Tip*
*If the name of the MD is too long, you can scroll it across the display by pressing (SHIFT), then (1) (←).*

### Automatically scrolling a disc name — Auto Scroll

If the disc name or track name on an MD exceeds 10 characters and the Auto Scroll function is on, the name automatically scrolls on the display as follows.
- *The disc name appears when the disc has changed (if the disc name is selected).*
- *The track name appears when the track has changed (if the track name is selected).*
- *The disc or track name appears depending on the setting when you press (SOURCE) to select an MD.*

If you press (DSPL) to change the display item, the disc or track name of the MD is scrolled automatically whether you set the function on or off.

**1** **Press (SHIFT), then press (2) (SET UP) repeatedly until "A.Scrl" appears.**

**2** **Press (4) (→) to select "A.Scrl on."**

**3** **Press (SHIFT).**

To cancel Auto Scroll, select "A.Scrl off" in step 2 above.

### Displaying the recording date of the currently selected MD

**Press (DSPL) for two seconds during MD playback.**
The recording date of the track is displayed for about three seconds.

### Locating a specific track — Automatic Music Sensor (AMS)

**During playback, press either side of (SEEK/AMS) once for each track you wish to skip.**

**To locate succeeding tracks**

**To locate preceding tracks**

### Locating a specific point in a track — Manual Search

**During playback, press and hold either side of (SEEK/AMS). Release the button when you have found the desired point.**

**To search forward**

**To search backward**

### Locating a disc by disc number — Direct Disc Selection

**Press the number button that corresponds with the desired disc number.**
The desired disc in the currently selected changer begins playback.

## Scanning the tracks — Intro Scan

You can play the first 10 seconds of all the tracks on the current disc.

**1** **During playback, press (SHIFT), then press (3) (PLAY MODE) repeatedly until "Intro" appears.**

**2** **Press (4) (→) repeatedly until "Intro on" appears.**
Intro Scan starts.

**3** **Press (SHIFT).**

To go back to the normal playback mode, select "Intro off" in step 2 above.

## Playing tracks repeatedly — Repeat Play

You can select:
- Repeat 1 to repeat a track.
- Repeat 2 to repeat a disc.
- Repeat 3 to repeat all the discs in the current changer when you connect two or more changers.

**1** **During playback, press (SHIFT), then press (6) (REP) repeatedly until "Repeat" appears.**

**2** **Press (6) (REP) repeatedly until the desired setting appears.**
**→ Repeat 1 → Repeat 2 → Repeat 3 → Repeat off →**
Repeat play starts.

**3** **Press (SHIFT).**

To go back to the normal playback mode, select "Repeat off" in step 2 above.

## Playing tracks in random order — Shuffle Play

You can select:
- Shuf 1 to play the tracks on the current disc in random order.
- Shuf 2 to play the tracks in the current changer in random order.
- Shuf 3 to play all the tracks in random order when you connect two or more changers.

**1** **During playback, press (SHIFT), then press (7) (SHUF) repeatedly until "Shuf" appears.**

**2** **Press (7) (SHUF) repeatedly until the desired setting appears.**
**→ Shuf 1 → Shuf 2 → Shuf 3 → Shuf off →**
Shuffle play starts.

**3** **Press (SHIFT).**

To go back to the normal playback mode, select "Shuf off" in step 2 above.

www.manualscenter.com



EN

## Creating a programme

### — Programme Memory (CD changer with programme memory function)

You can play tracks in the order you want by making your own programme. You can make two programmes: Programme 1 and Programme 2. You can select up to 12 tracks for each programme. You can store the programmes in memory.

**1 Press (SHIFT), then press (3) (PLAY MODE) for two seconds.**

Programme edit mode

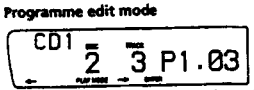


"P1" shows Programme 1 is selected.

If you have labeled the disc, the bank edit mode appears. Press (3) (PLAY MODE) to display "P1" above.

To select Programme 2, press (4) (→) repeatedly until "P2" appears.

**2 Select the track you want.**

❶ Press (SOURCE) repeatedly to select the CD.

❷ Press (MODE) repeatedly to select the changer.

❸ Press (SHIFT), then press the number button to select the disc.

❹ Press (SHIFT).

❺ Press either side of (SEEK/AMS) to select the track.

**3 Press (5) (ENTER) momentarily.**

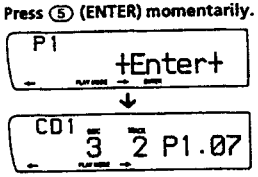


**4 To continue entering tracks, repeat steps 2 and 3.**

**5 When you finish entering tracks, press (3) (PLAY MODE) for two seconds.**

**6 Press (SHIFT).**

*Notes*
- *"*Wait*" appears in the display while the unit is reading the data, or when a disc has not been put into the unit.*
- *"*Mem full*" appears in the display when you try to enter more than 12 tracks into a programme.*

### Playing the stored programme

Changing the disc order in the changer will not affect programme memory play.

You can select:
- PGM 1 to play Programme 1.
- PGM 2 to play Programme 2.
- PGM 1+2 to play Programmes 1 and 2.

**1 Press (SHIFT).**

**2 Press (3) (PLAY MODE) repeatedly until "PGM" appears.**

**3 Press (4) (→) repeatedly until the desired programme appears.**
Programme play starts.

Programme 1 Playback

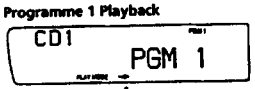


Programme 2 Playback

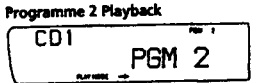


Programmes 1 and 2 Playback

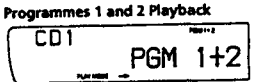


Normal Playback

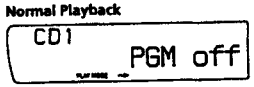


**4 Press (SHIFT).**

To go back to the normal playback mode, select "PGM off" in step 3 above.

*Notes*
- *If you press a number button during programme memory play, programme memory play is interrupted, and playback of the selected disc starts.*
- *"NO Data" appears in the display if no track is stored in the programme.*
- *If a track stored into the programme memory is not in the disc magazine, the track will be skipped.*
- *When the disc magazine contains not a single track stored into the programme memory, or when the programme information has not been loaded yet, "Not Ready" appears.*



### Erasing the entire programme

**1 Press (SHIFT), then press (3) (PLAY MODE) for two seconds.**
If you have labeled the disc, the bank edit mode appears. Press (3) (PLAY MODE) to display "P1" above.

**2 Press (1) (←) repeatedly until "DEL" appears.**

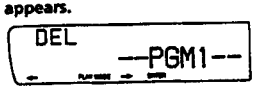


To erase Programme 2, press (4) (→) repeatedly until "P2" appears.

**3 Press (5) (ENTER) for two seconds.**

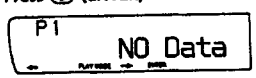


The entire programme is erased.

**4 When you finish erasing programmes, press (3) (PLAY MODE) for two seconds.**

**5 Press (SHIFT).**

### Adding tracks to the programme

**1 Press (SHIFT), then press (3) (PLAY MODE) for two seconds.**
If you have labeled the disc, the bank edit mode appears. Press (3) (PLAY MODE) to display "P1" above.

To select Programme 2, press (4) (→) repeatedly until "P2" appears.

**2 Press (1) (←) or (4) (→) to select the track slot number where you want to insert a track.**

Track slot number

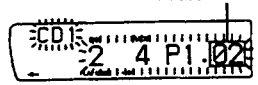


**3 Press either side of (SEEK/AMS) to select the track you want to insert.**

**4 Press (5) (ENTER) momentarily to enter the track.**
The current track in that slot number and the succeeding tracks shift down.
To continue inserting tracks, repeat steps 2 through 4.

*Note*
*Once all 12 slots have been filled, "*Mem full*" appears in the display, and you cannot insert tracks.*

**5 When you finish inserting tracks, press (3) (PLAY MODE) for two seconds.**

**6 Press (SHIFT).**

### Erasing the tracks in the programme

**1 Press (SHIFT), then press (3) (PLAY MODE) for two seconds.**
If you have labeled the disc, the bank edit mode appears. Press (3) (PLAY MODE) to display "P1" above.

To select Programme 2, press (4) (→) repeatedly until "P2" appears.

**2 Press (1) (←) or (4) (→) to select the track you want to erase.**

Track Slot Number

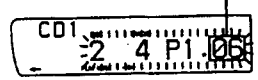


The track currently registered in slot 6 of Programme 1.

**3 Press (5) (ENTER) for two seconds.**
When you erase a track from a slot number, the succeeding tracks shift up to fill the gap.

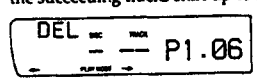


**4 To continue erasing tracks, repeat steps 2 and 3.**

**5 When you finish erasing tracks, press (3) (PLAY MODE) for two seconds.**

**6 Press (SHIFT).**

EN

## Labeling a CD

**— Disc Memo/Custom File (CD changer with custom file function)**

You can label each disc with a personalized name. You can enter up to 8 characters for a disc. If you label a CD, you can locate a disc by name (page 19) and select the specific tracks for playback (page 19).

**1 Play the CD and press (PTY/LIST) for two seconds.**

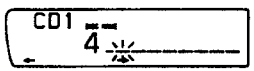


**2 Enter the characters.**

**❶ Rotate the dial clockwise direction to select the desired characters.**
**(A → B → C → ··· Z → 0 → 1 → 2 → ··· 9 → + → – → * → / → \ → > → < → . → _)**

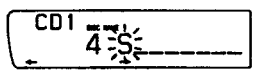


If you rotate the dial counterclockwise, the characters appear in reverse order. If you want to put a blank space between characters, select "_" (under-bar).

**❷ Press (4) (→) after locating the desired character.**
The flashing cursor moves to the next space.

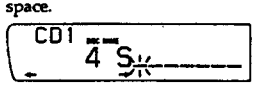


If you press (1) (←), the flashing cursor moves to the left.

**❸ Repeat steps ❶ and ❷ to enter the entire name.**

**3 To return to the normal CD playback mode, press (PTY/LIST) for two seconds.**

*Tip*
*To erase/correct a name, enter "_" (under-bar) for each character.*

### Displaying the disc memo

**During playback, press (DSPL).**

Each time you press (DSPL) during CD playback, the item changes as follows:

→ Elapsed playback time → Disc name → Clock →

### Erasing the disc memo

**1 Press (SOURCE) repeatedly to select CD.**

**2 Press (MODE) repeatedly to select the CD changer.**

**3 Press (PTY/LIST) for two seconds.**

**4 Press (DSPL) for two seconds.**
"Delete" and the disc memo appear in the display.

**5 Rotate the dial to select the name you want to erase.**

**6 Press (5) (ENTER) for two seconds.**
The name is erased.
Repeat steps 5 and 6 if you want to erase other names.

**7 Press (PTY/LIST) for two seconds.**
The unit returns to the normal CD playback mode.



## Locating a disc by name

**— List-up (CD changer with custom file function or MD changer)**

You can use this function for the discs that have been assigned a personalized name. For more information on disc names, refer to "Labeling a CD" (page 18).

**1 Press (PTY/LIST) momentarily.**
The names assigned to the disc currently playing and the next disc to be played appear in the display. The name assigned to currently playing disc is flashing.

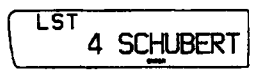


**2 Press (PTY/LIST) repeatedly until you find the desired disc.**

**3 Press (5) (ENTER) to play back the disc.**

*Notes*
- *To go back to the normal display, press (DSPL). Once a disc name has been displayed for five seconds, the display goes back to the normal playback mode.*
- *The track names are not displayed during MD playback.*
- *If there are no discs in the magazine, "NO Disc" appears in the display.*
- *If a disc has not been assigned a custom file, "********" appears in the display.*
- *If the disc information has not been read by the unit, "?" appears in the display. To load the disc, first press a number button, then choose a disc that has not been loaded.*
- *The information appears only in upper cases. There are also some letters which cannot be displayed (during MD playback).*

## Selecting the specific tracks for playback

**— Bank/Custom File (CD changer with custom file function)**

If you label the disc, you can set the unit to skip tracks and play only the tracks you want.

**1 Start playing the disc and press (SHIFT). Then press (3) (PLAY MODE) for two seconds.**

Bank edit mode

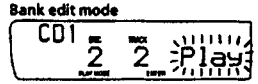


*Note*
*If you have not labeled the disc, the bank edit mode does not appear and the programme edit mode appears. To go back to the normal playback mode, press (3) (PLAY MODE) for two seconds.*

**2 Press either side of (SEEK/AMS) to select the track number you want to skip and press (5) (ENTER).**

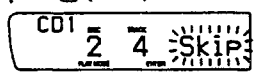


The indication changes from "Play" to "Skip." If you want to return to "Play," press (5) (ENTER) again.

**3 Repeat step 2 to set the "Play" or "Skip" mode on all the tracks.**

**4 Press (3) (PLAY MODE) for two seconds.**

**5 Press (SHIFT).**

*Notes*
- *You can set the "Play" and "Skip" modes on up to 24 tracks.*
- *You cannot set the "Skip" mode on all the tracks.*

### Playing the specific tracks only

You can select:
- Bank on to play the tracks with the "Play" setting.
- Bank inv (inverse) to play the tracks with the "Skip" setting.

**1 During playback, press (SHIFT), then press (3) (PLAY MODE) repeatedly until "Bank" appears.**

**2 Press (4) (→) repeatedly until the desired setting appears.**

→ Bank on → Bank inv → Bank off →

Playback starts from the track following the current one.

**3 Press (SHIFT).**

To go back to the normal playback mode, select "Bank off" in step 2 above.

# Connections

## Caution

- This unit is designed for negative ground 12 V DC operation only.
- Connect the power connecting cord ⓑ to the unit and speakers before connecting it to the auxiliary power connector.
- **Run all ground wires to a common ground point.**
- Connect the yellow cord to a free car circuit rated higher than the unit's fuse rating. If you connect this unit in series with other stereo components, the car circuit they are connected to must be rated higher than the sum of the individual components' fuse rating. If there are no car circuits rated as high as the unit's fuse rating, connect the unit directly to the battery. If no car circuits are available for connecting this unit, connect the unit to a car circuit rated higher than the unit's fuse rating in such a way that if the unit blows its fuse, no other circuits will be cut off.

## If your car has no accessory position on the ignition key switch — POWER SELECT switch

The illumination on the front panel is factory set to be turned on even while the unit is not in use. However, this setting may cause some car battery wear **if your car has no accessory position on the ignition key switch. To avoid this battery wear, set the POWER SELECT switch located on the bottom of the unit to the ⓑ position, then press the reset button.** The illumination is reset to stay off while the unit is not in use.

***Note***

*The caution alarm for the front panel is not activated when the POWER SELECT switch is set to the ⓑ position.*

# Conexiones

## Precauciones

- Esta unidad ha sido diseñada para alimentarse con 12 V CC, negativo a masa, solamente.
- Conecte el cable de conexión de alimentación ⓑ a la unidad y los altavoces antes de conectarlo al conector de alimentación auxiliar.
- **Conecte todos los conductores de puesta a masa a un punto común.**
- Conecte el cable amarillo a un circuito libre de automóvil de potencia nominal superior a la del fusible de la unidad. Si conecta esta unidad en serie con otros componentes estéreo, la potencia nominal del circuito del automóvil a los que dichos componentes estén conectados debe ser superior a la suma de la potencia nominal del fusible de los componentes. Si no existen circuitos de automóvil de potencia nominal igual a la del fusible de la unidad, conecte ésta directamente a la batería. Si no hay circuitos de automóvil disponibles para conectar esta unidad, conecte la misma a un circuito de automóvil de potencia nominal superior a la del fusible de la unidad de forma que no se desactiven otros circuitos si el fusible de dicha unidad se funde.

## Si el automóvil no dispone de posición para accesorios en la llave de encendido

**— Selector POWER SELECT**

La iluminación del panel frontal ha sido ajustada en fábrica para que esté activada aunque la unidad no se encuentre en funcionamiento. Sin embargo, este ajuste puede provocar cierta descarga de la batería del automóvil **si éste no dispone de posición para accesorios en la llave de encendido. Para evitar esto, ponga el selector POWER SELECT, situado en la base de la unidad, en la posición ⓑ y, después, presione el botón de reposición.** La iluminación estará desactivada cuando la unidad no se encuentre en funcionamiento.

***Nota***

*La alarma de precaución del panel frontal no se activará cuando el selector POWER SELECT se encuentre en la posición ⓑ.*

# Anslutning

## Säkerhetsföreskrifter

- Denna bilstereo är endast avsedd för anslutning till ett negativt jordat, 12 V bilbatteri.
- Anslut strömkabeln ⓑ till enheten och högtalarna innan du ansluter den till den yttre strömanslutning.
- **Dra samtliga jordledningar till en och samma jordningspunkt.**
- Anslut den gula kabeln till en ledig bilkrets med en högre ampere än enhetens. Om du seriekopplar enheten till andra stereokomponenter måste den bilkrets de kopplas till ha en högre ampere än summan av de enskilda delarnas amperestyrka. Om det inte finns några bilkretsar med en så hög amperestyrka som enhetens ska du ansluta enheten direkt till batteriet. Om inga bilkretsar finns för anslutning till enheten ska du ansluta enheten till en bilkrets med en högra ampere än enhetens styrka så att inga andra säkringar går om enhetens säkring smälter.

## Montera bilstereon i en bil vars tändlås inte har något strömläge

**— Omkopplaren POWER SELECT**

Innan bilstereon levererades från fabriken ställdes belysningen i teckenfönstret in så att den lyser också när bilstereon inte används. Detta kan emellertid orsaka urladdning av batteriet när du använder bilstereon i en bil, **vars tändlås saknar läget ACC (strömläge). Skjut omkopplaren POWER SELECT på bilstereons undersida till läge ⓑ, och tryck sedan på återställningsknappen** för att undvika att bilbatteriet laddas ur. Nu lyser inte längre belysningen i teckenfönstret när bilstereon inte används.

***Observera***

*Varningssignalen, som varnar om du inte har tagit loss frontpanelen, ljuder inte när omkopplaren POWER SELECT står i läge ⓑ.*

# Ligações

## Advertência

- Este aparelho foi concebido para funcionar somente com corrente contínua de 12 V com massa negativa.
- Ligue o cabo de alimentação de corrente ⓑ ao aparelho e aos alifalantes antes de o ligar ao conector de corrente auxiliar.
- **Ligue todos os fios de terra num ponto de massa comum.**
- Ligue o cabo amarelo a um circuito eléctrico livre do automóvel, cuja tensão seja superior à dos fusíveis do aparelho. Se ligar este aparelho em série com outros componentes estéreo, a tensão do circuito eléctrico do automóvel onde os ligar tem de ser superior à soma das tensões dos fusíveis de todos os componentes individuais. Se não houver nenhum circuito eléctrico do automóvel com uma tensão tão elevada como a dos fusíveis do aparelho, ligue-o directamente à bateria. Se não estiver disponível nenhum circuito eléctrico do automóvel para ligação deste aparelho, ligue-o a um circuito eléctrico do automóvel com uma tensão superior à dos fusíveis do aparelho, de tal modo que, se o aparelho rebentar os fusíveis respectivos, nenhum outro circuito seja cortado.

## Se o seu automóvel não estiver equipado com uma chave de ignição com posição acessórios

**— Interruptor POWER SELECT**

A iluminação do painel frontal é regulada na fábrica para se manter acesa, mesmo quando o aparelho não estiver ligado. No entanto, esta regulação pode provocar a descarga da bateria **se o aparelho for utilizado em automóveis sem chave de ignição com posição acessórios.** Para evitar a descarga da bateria, **regule o interruptor POWER SELECT, situado na base do aparelho, para a posição ⓑ. Em seguida, carregue no botão de reinicialização.** A iluminação é regulada para ficar apagada enquanto o aparelho estiver desligado.

***Nota***

*O alarme de advertência do painel frontal não é activado quando o interruptor POWER SELECT estiver regulado para a posição ⓑ.*

**Change the position with a jeweler's screwdriver, etc.**

**Cambie la posición con un destornillador de relojero, etc.**

**Använd en skruvmejsel för finmekaniker eller att liknande verktyg för att ändra på omkopplarläget.**

**Altere a posição do interruptor com uma chave de fendas de precisão, etc.**

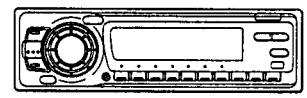

*When you change the position of the switch, be sure to press the reset button after the connections are completed.*

*Cuando cambie la posición del selector, cerciórese de presionar los botón de reposición después de haber finalizado las conexiones.*

*Kom ihåg att trycka på återställningsknapp efter slutförda anslutningar när reljäreläget ändrats.*

*Se alterar a posição do selector tem de carregar numa das tecla de reinicialização depois de ter terminado de fazer todas as ligações.*

***Notes on the control leads***

- *The power aerial control lead (blue) supplies +12 V DC when you turn on the tuner or when you activate the ATA (Automatic Tuner Activation), AF (Alternative Frequency) or the TA (Traffic Announcement).*
- *A power aerial without a relay box cannot be used with this unit.*

***Memory hold connection***

*When the yellow power input lead is connected, power will always be supplied to the memory circuit even when the ignition switch is turned off.*

***Notes on speaker connection***

- *Before connecting the speakers, turn the unit off.*
- *Use speakers with an impedance of 4 to 8 ohms, and with adequate power handling capacities. Otherwise, the speakers may be damaged.*
- *Do not connect the terminals of the speaker system to the car chassis, and do not connect the terminals of the right speaker with those of the left speaker.*
- *Do not attempt to connect the speakers in parallel.*
- *Do not connect any active speakers (with built-in amplifiers) to the speaker terminals of the unit. Doing so may damage the active speakers. Therefore, be sure to connect passive speakers to these terminals.*

***Warning***

*If you have a power aerial without a relay box, connecting this unit with the supplied power connecting cord ⓑ may damage the aerial.*

***Notas sobre conductores de control***

- *El conductor de control de la antena motorizada (azul) suministrará +12 V CC cuando conecte la alimentación del sintonizador o cuando active la función de activación automática del sintonizador (ATA), frecuencia alternativa (AF) o la de anuncios de tráfico (TA).*
- *Con esta unidad no podrá utilizarse una antena motorizada sin caja de relés.*

***Conexión para protección de la memoria***

*Si conecta el conductor de entrada amarillo, el circuito de la memoria recibirá siempre alimentación, incluso aunque ponga la llave de encendido en la posición OFF.*

***Notas sobre la conexión de los altavoces***

- *Antes de conectar los altavoces, desconecte la alimentación de la unidad.*
- *Utilice altavoces con una impedancia de 4 a 8 ohmios, y con la potencia máxima admisible adecuada, ya que de lo contrario podría dañarlos.*
- *No conecte los terminales del sistema de altavoces al chasis del automóvil, ni los del altavoz izquierdo a los del derecho.*
- *No intente conectar los altavoces en paralelo.*
- *No conecte altavoces activos (con amplificadores incorporados) a los terminales de altavoces de la unidad. Si lo hiciese, podría dañar tales altavoces. Por lo tanto, cerciórese de conectar altavoces pasivos a estos terminales.*

***Advertencia***

*Si dispone de una antena motorizada sin dispositivo de relé, la conexión de esta unidad con el cable de conexión de alimentación ⓑ suministrado puede dañar la antena.*

***Att observera angående de olika styrkablarna***

- *Motorantennens styrkabel (blå) leder +12 volts likström när bilradion slås på eller när radiomottagningsautomatik ATA, mottagning av alternativa frekvenser AF eller mottagning av trafikmeddelanden TA.*
- *En motorantenn utan styrreläslosa kan inte anslutas till denna bilstereo.*

***Anslutning för minnesstöd***

*När du anslutit den gula, ingående strömkabeln försörjs minneskretsen med ström hela tiden, även när tändlåset slås ifrån.*

***Att observera angående högtalarnas anslutning***

- *Slå av bilstereon innan du ansluter högtalarna.*
- *Anslut endast högtalare, vars impedans varierar från 4 till 8 ohm och som har tillräcklig effekthanteringskapacitet för att skydda högtalarna mot skador.*
- *Anslut inte något av högtalaruttagen till bilens chassi. Anslut inte heller uttagen på höger högtalare till uttagen på vänster högtalare.*
- *Anslut inte högtalarna parallellt.*
- *Anslut inte aktiva högtalare (med inbyggda slutsteg) till bilstereons högtalaruttag, eftersom de kan skada de aktiva högtalarna.*
  *Var noga med att bara ansluta passiva högtalare till dessa uttag.*

***Varning***

*Om du har en motorantenn utan reläslosa kan antennen skadas om du ansluter enheten med den medföljande strömkabeln ⓑ.*

***Notas sobre os fios de controlo***

- *O fio de controlo da antena eléctrica (azul) fornece +12 V CC quando da ligação do sintonizador ou da activação de função ATA (Activação automática do sintonizador), AF (Frequência Alternativa) ou TA (Boletins de Trifego).*
- *Uma antena motorizada sem um relé não pode ser utilizada com este aparelho.*

***Ligação para alimentação contínua da memória***

*Quando, o fio amarelo de entrada de alimentação for ligado, os circuitos de memória ficarão com alimentação contínua, mesmo se a chave de ignição estiver desligada.*

***Notas sobre a ligação dos altifalantes***

- *Antes de ligar os altifalantes, desligue o aparelho.*
- *Utilize altifalantes com impedância de 4 a 8 ohm, e com capacidade admissível de potência adequada. Caso contrário, os altifalantes poderão sofrer avarias.*
- *Não ligue os terminais do sistema à altifalantes ao chassis do automóvel, e não ligue os terminais do altifalante direito aos terminais do altifalante esquerdo.*
- *Não tente ligar os altifalantes em paralelo.*
- *Não ligue nenhum sistema de altifalantes activos (com amplificadores incorporados) aos terminais dos altifalantes do aparelho.*
  *Caso o faça, poderá avariar o sistema de altifalantes activos. Portanto, não se esqueça de ligar altifalantes passivos a estes terminais.*

***Atenção***

*Se a antena eléctrica não tiver uma caixa de relé, o facto de ligar esta aparelho com a cabo de alimentação ⓑ fornecido, pode provocar danos na antena.*

www.manualscenter.com

## Connections example / Ejemplo de conexiones / Anslutningarna enligt exemplet / Exemplo de ligações

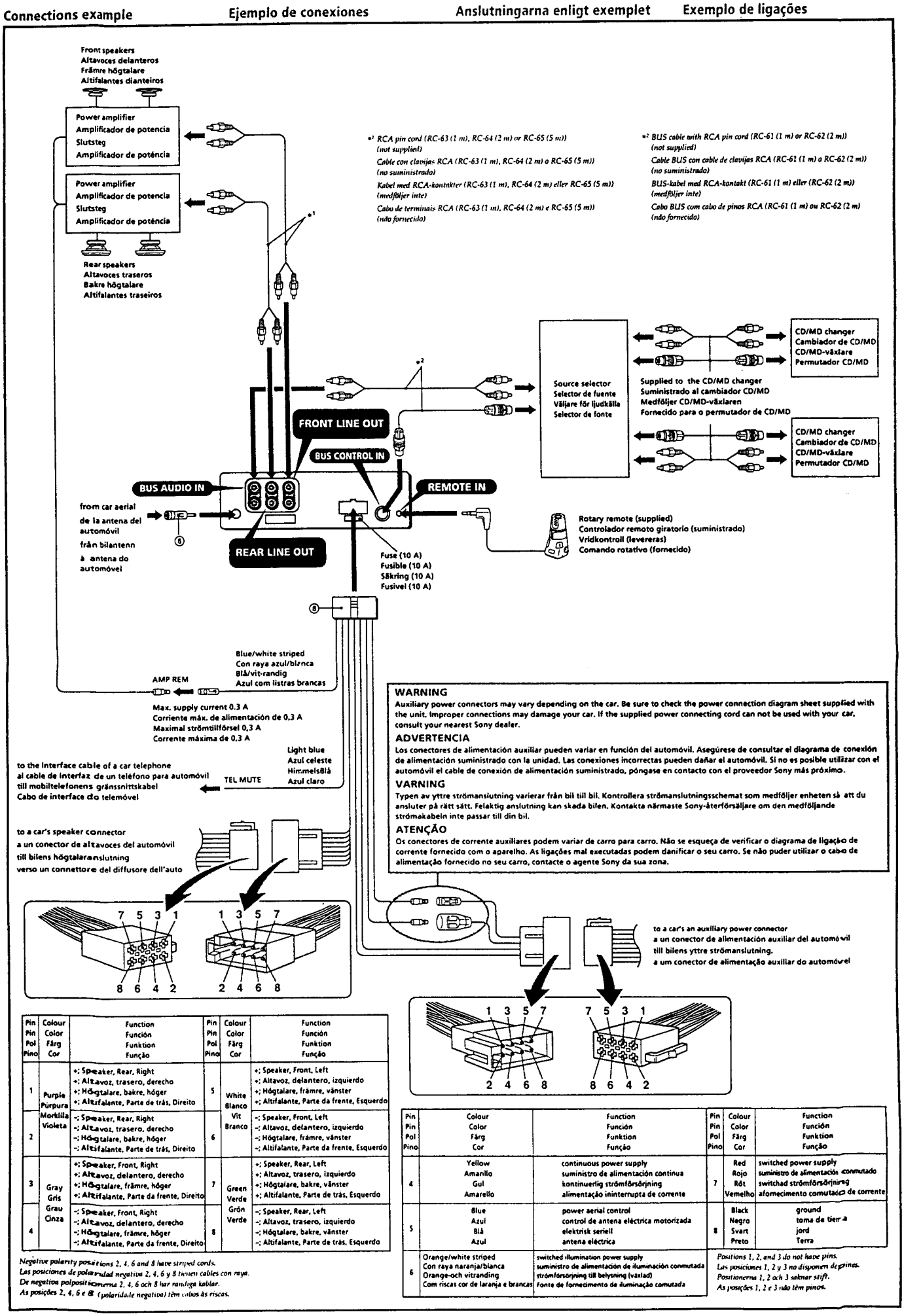


**WARNING**
Auxiliary power connectors may vary depending on the car. Be sure to check the power connection diagram sheet supplied with the unit. Improper connections may damage your car. If the supplied power connecting cord can not be used with your car, consult your nearest Sony dealer.

**ADVERTENCIA**
Los conectores de alimentación auxiliar pueden variar en función del automóvil. Asegúrese de consultar el diagrama de conexión de alimentación suministrado con la unidad. Las conexiones incorrectas pueden dañar el automóvil. Si no es posible utilizar con el automóvil el cable de conexión de alimentación suministrado, póngase en contacto con el proveedor Sony más próximo.

**VARNING**
Typen av yttre strömanslutning varierar från bil till bil. Kontrollera strömanslutningsschemat som medföljer enheten så att du ansluter på rätt sätt. Felaktig anslutning kan skada bilen. Kontakta närmaste Sony-återförsäljare om den medföljande strömkabeln inte passar till din bil.

**ATENÇÃO**
Os conectores de corrente auxiliares podem variar de carro para carro. Não se esqueça de verificar o diagrama de ligação de corrente fornecido com o aparelho. As ligações mal executadas podem danificar o seu carro. Se não puder utilizar o cabo de alimentação fornecido no seu carro, contacte o agente Sony da sua zona.

| Pin Pin Pol Pino | Colour Color Färg Cor | Function Función Funktion Função | Pin Pin Pol Pino | Colour Color Färg Cor | Function Función Funktion Função |
|---|---|---|---|---|---|
| 1 | Purple Púrpura | +; Speaker, Rear, Right<br>+; Altavoz, trasero, derecho<br>+; Högtalare, bakre, höger<br>+; Altifalante, Parte de trás, Direito | 5 | White Blanco Vit Branco | +; Speaker, Front, Left<br>+; Altavoz, delantero, izquierdo<br>+; Högtalare, främre, vänster<br>+; Altifalante, Parte da frente, Esquerdo |
| 2 | Mörklila Violeta | -; Speaker, Rear, Right<br>-; Altavoz, trasero, derecho<br>-; Högtalare, bakre, höger<br>-; Altifalante, Parte de trás, Direito | 6 | | -; Speaker, Front, Left<br>-; Altavoz, delantero, izquierdo<br>-; Högtalare, främre, vänster<br>-; Altifalante, Parte da frente, Esquerdo |
| 3 | Gray Gris | +; Speaker, Front, Right<br>+; Altavoz, delantero, derecho<br>+; Högtalare, främre, höger<br>+; Altifalante, Parte da frente, Direito | 7 | Green Verde Grön Verde | +; Speaker, Rear, Left<br>+; Altavoz, trasero, izquierdo<br>+; Högtalare, bakre, vänster<br>+; Altifalante, Parte de trás, Esquerdo |
| 4 | Grau Cinza | -; Speaker, Front, Right<br>-; Altavoz, delantero, derecho<br>-; Högtalare, främre, höger<br>-; Altifalante, Parte da frente, Direito | 8 | | -; Speaker, Rear, Left<br>-; Altavoz, trasero, izquierdo<br>-; Högtalare, bakre, vänster<br>-; Altifalante, Parte de trás, Esquerdo |

*Negative polarity positions 2, 4, 6 and 8 have striped cords.*
*Las posiciones de polaridad negativa 2, 4, 6 y 8 tienen cables con raya.*
*De negativa polpositionerna 2, 4, 6 och 8 har randiga kablar.*
*As posições 2, 4, 6 e 8 (polaridade negativa) têm cabos às riscas.*

| Pin Pin Pol Pino | Colour Color Färg Cor | Function Función Funktion Função | Pin Pin Pol Pino | Colour Color Färg Cor | Function Función Funktion Função |
|---|---|---|---|---|---|
| 4 | Yellow Amarillo Gul Amarello | continuous power supply<br>suministro de alimentación continua<br>kontinuerlig strömförsörjning<br>alimentação ininterrupta de corrente | 7 | Red Rojo Rött Vermelho | switched power supply<br>suministro de alimentación conmutado<br>switchad strömförsörjning<br>afornecimento comutado de corrente |
| 5 | Blue Azul Blå Azul | power aerial control<br>control de antena eléctrica motorizada<br>elektrisk seriell<br>antena eléctrica | 8 | Black Negro Svart Preto | ground<br>toma de tierra<br>jord<br>Terra |
| 6 | Orange/white striped Con raya naranja/blanca Orange-och vitranding Com riscas cor de laranja e brancas | switched illumination power supply<br>suministro de alimentación de iluminación conmutada<br>strömförsörjning till belysning (växlad)<br>Fonte de fornecimento de iluminação comutada | | | |

*Positions 1, 2, and 3 do not have pins.*
*Las posiciones 1, 2 y 3 no disponen de pines.*
*Positionerna 1, 2 och 3 saknar stift.*
*As posições 1, 2 e 3 não têm pinos.*

# SECTION 2
# DISASSEMBLY

**Note :** Follow the disassembly procedure in the numerical order given.

## 2-1. COVER ASSY

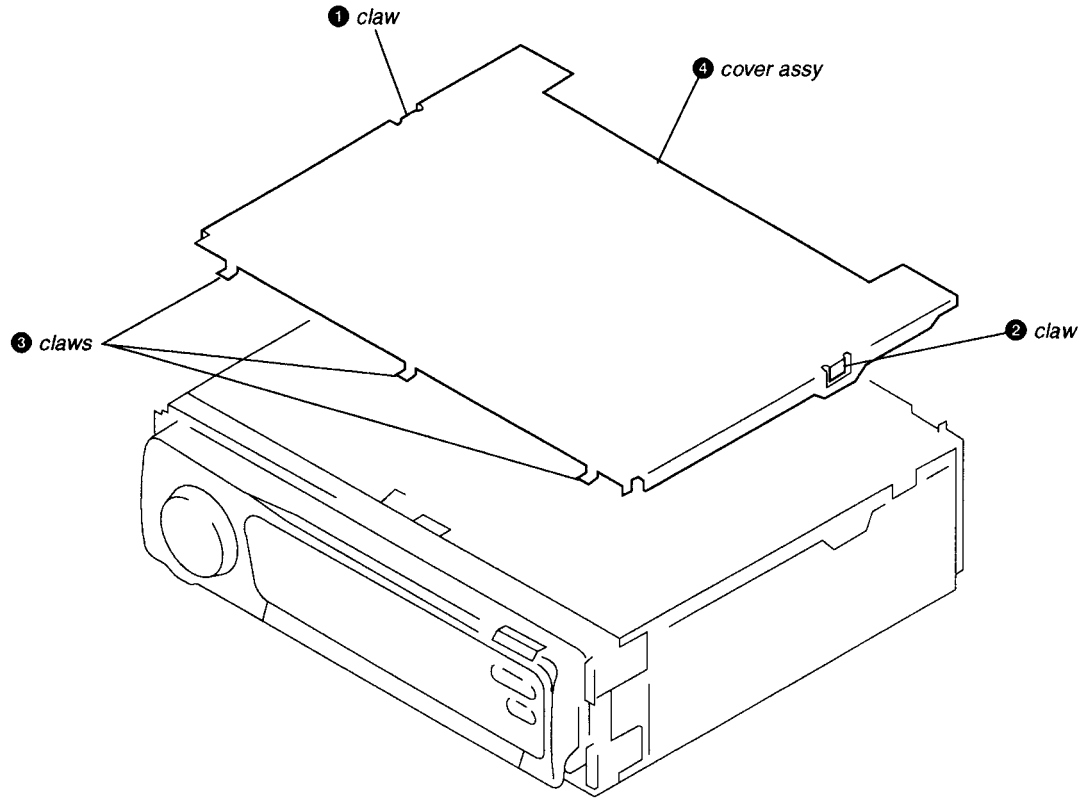


## 2-2. FRONT PANEL ASSY

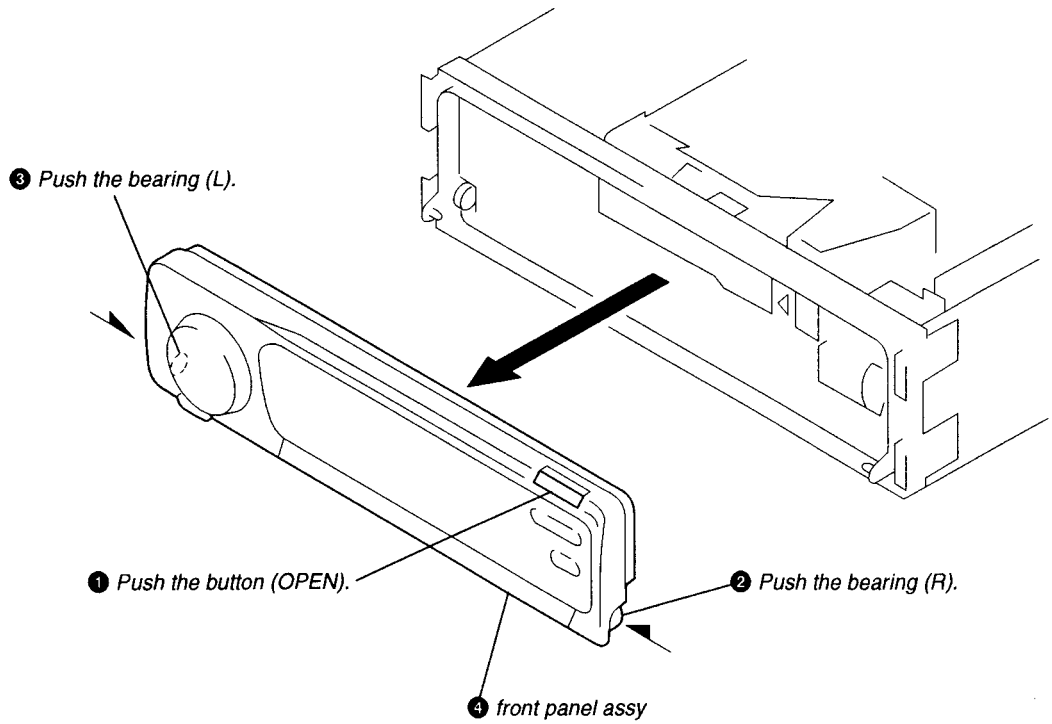

## 2-3. SUB PANEL ASSY

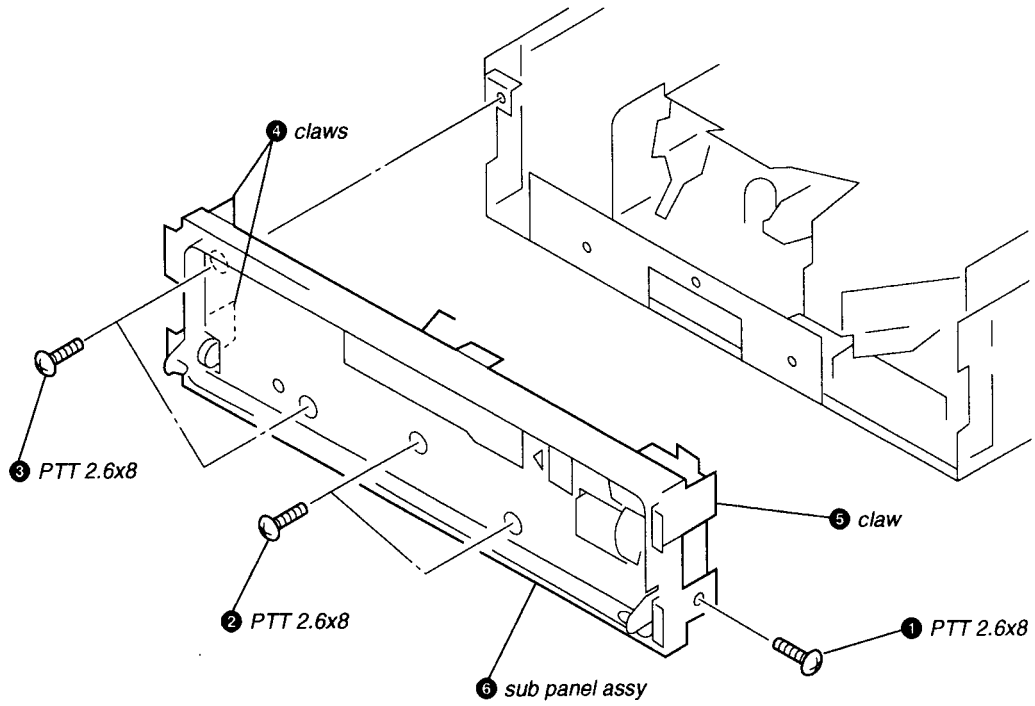


## 2-4. MECHANISM DECK BLOCK

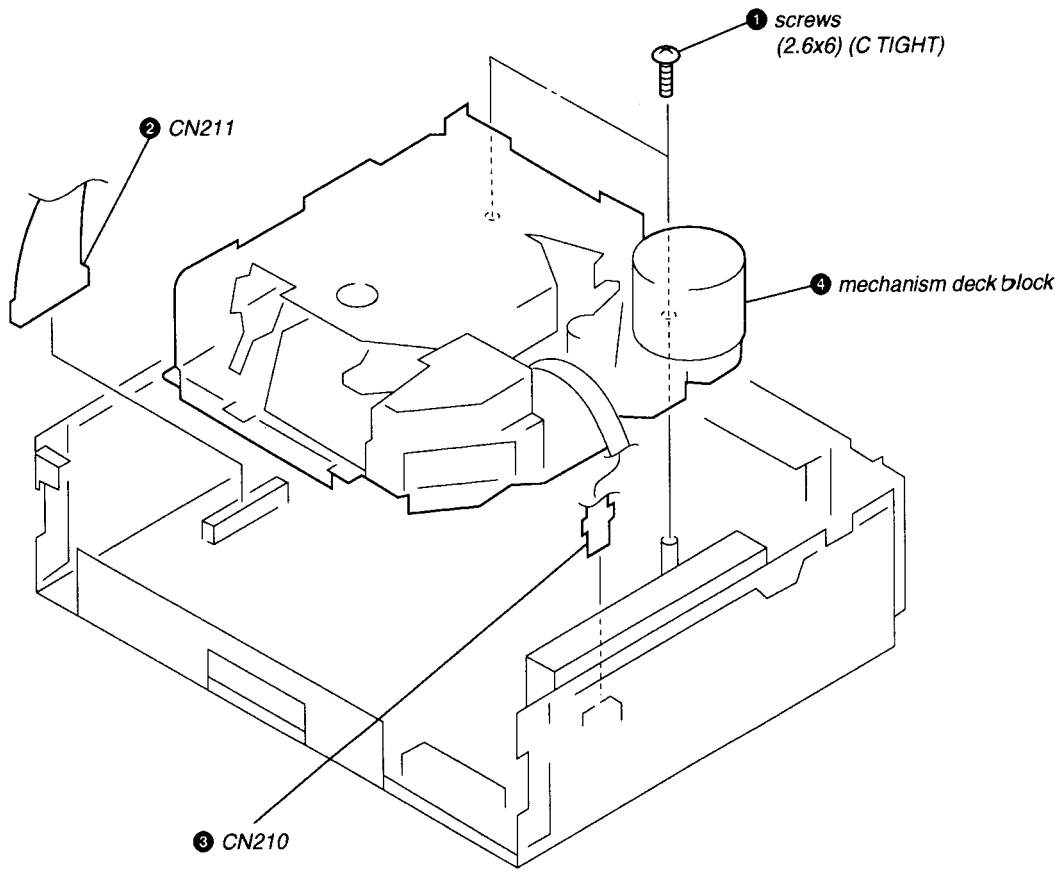

## 2-5. HEAT SINK

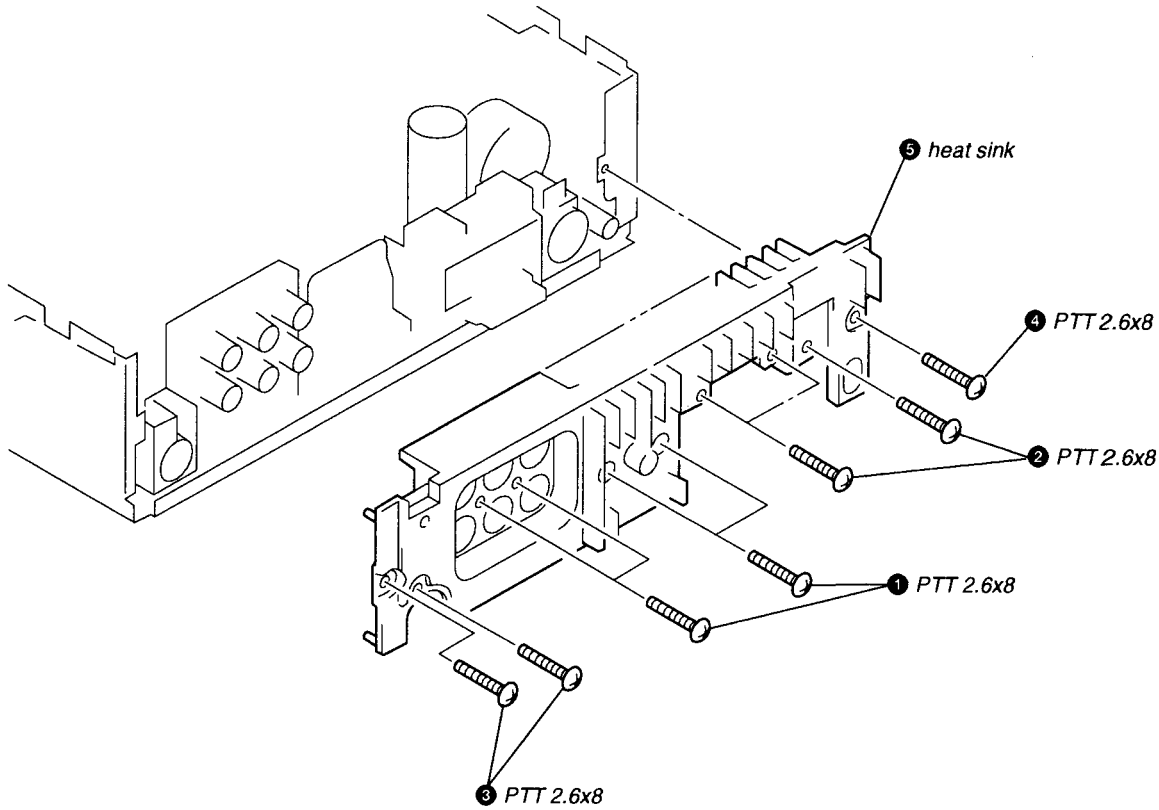


## 2-6. MAIN BOARD

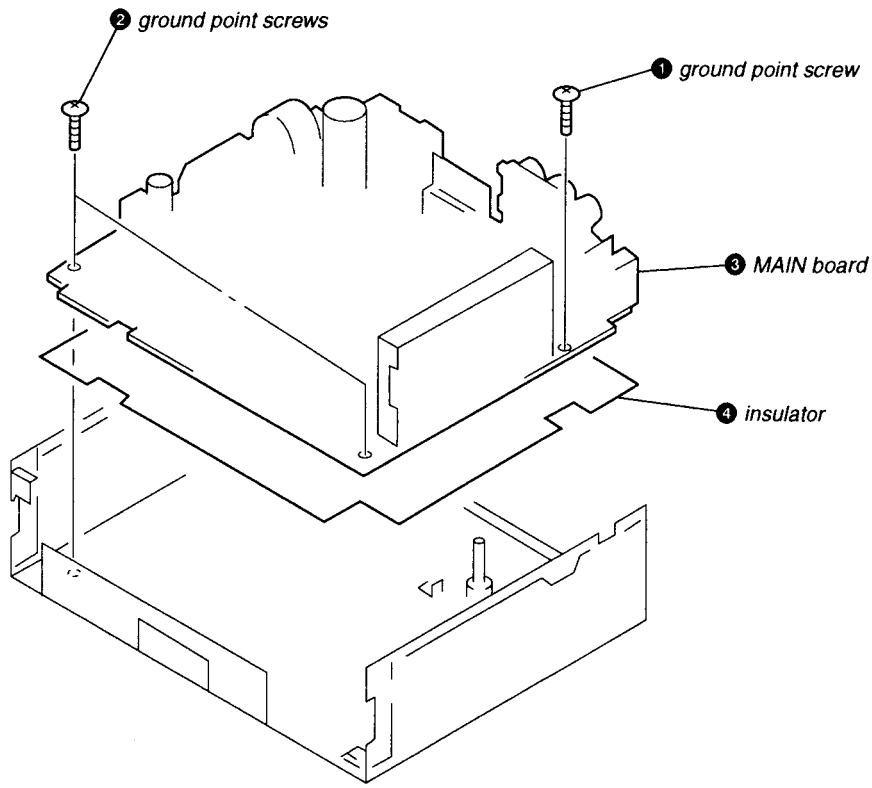

# SECTION 3
# ASSEMBLY OF MECHANISM DECK

**Note :** Follow the assembly procedure in the numerical order given.

## ALIGNMENT OF ROTARY SWITCH

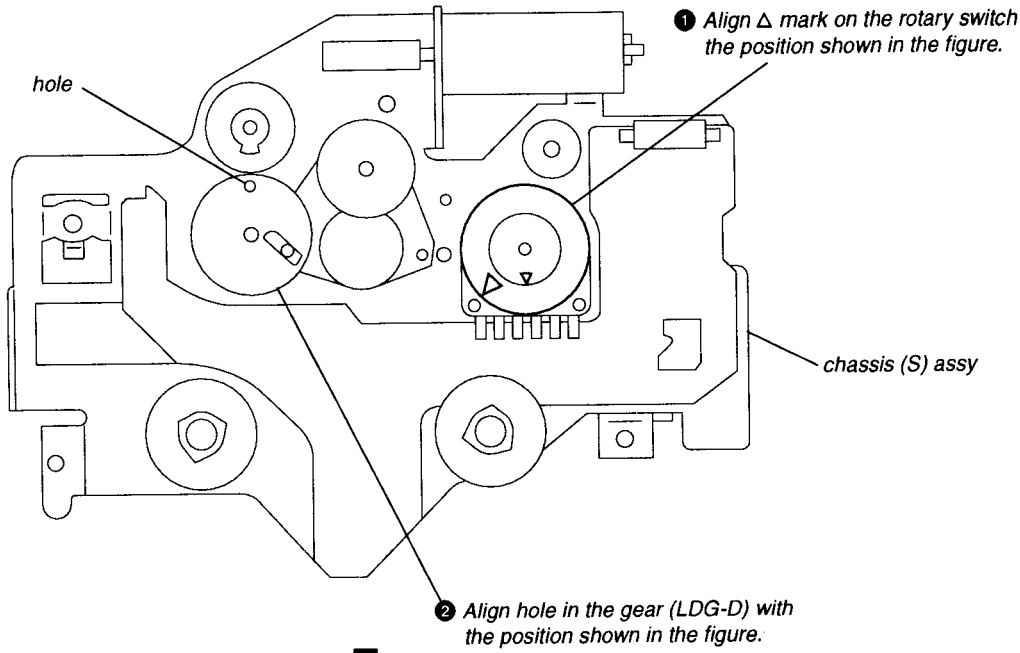


## GEAR (LDG-E)

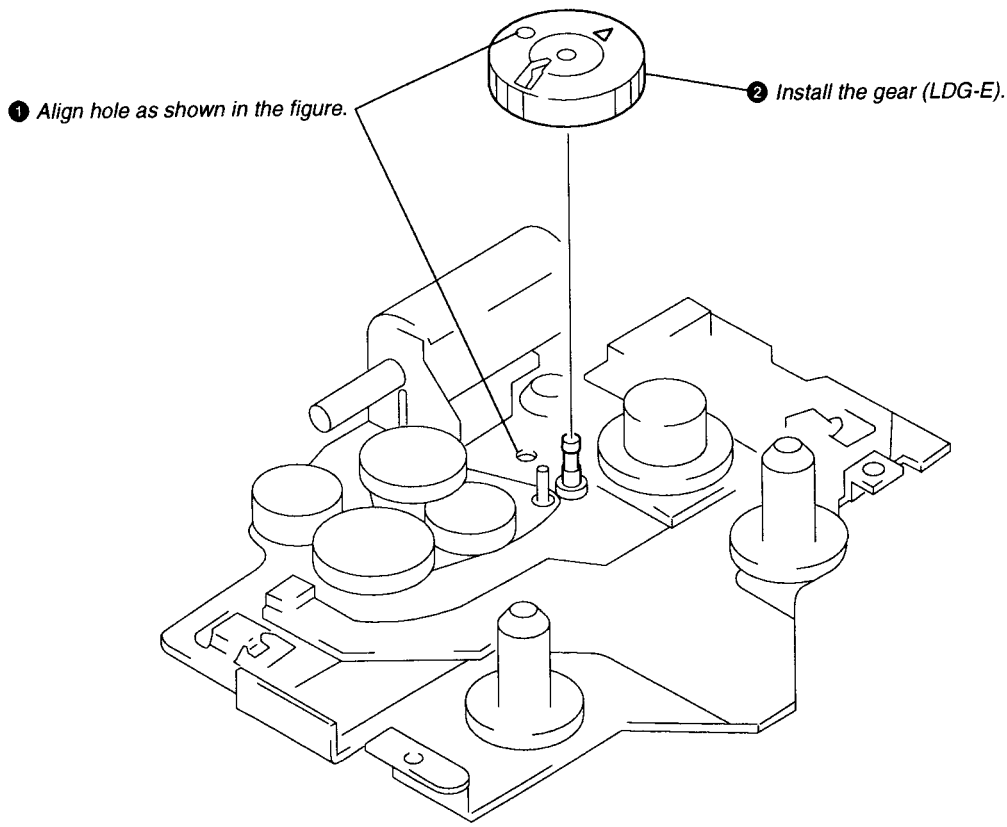

## CHASSIS (S) ASSY

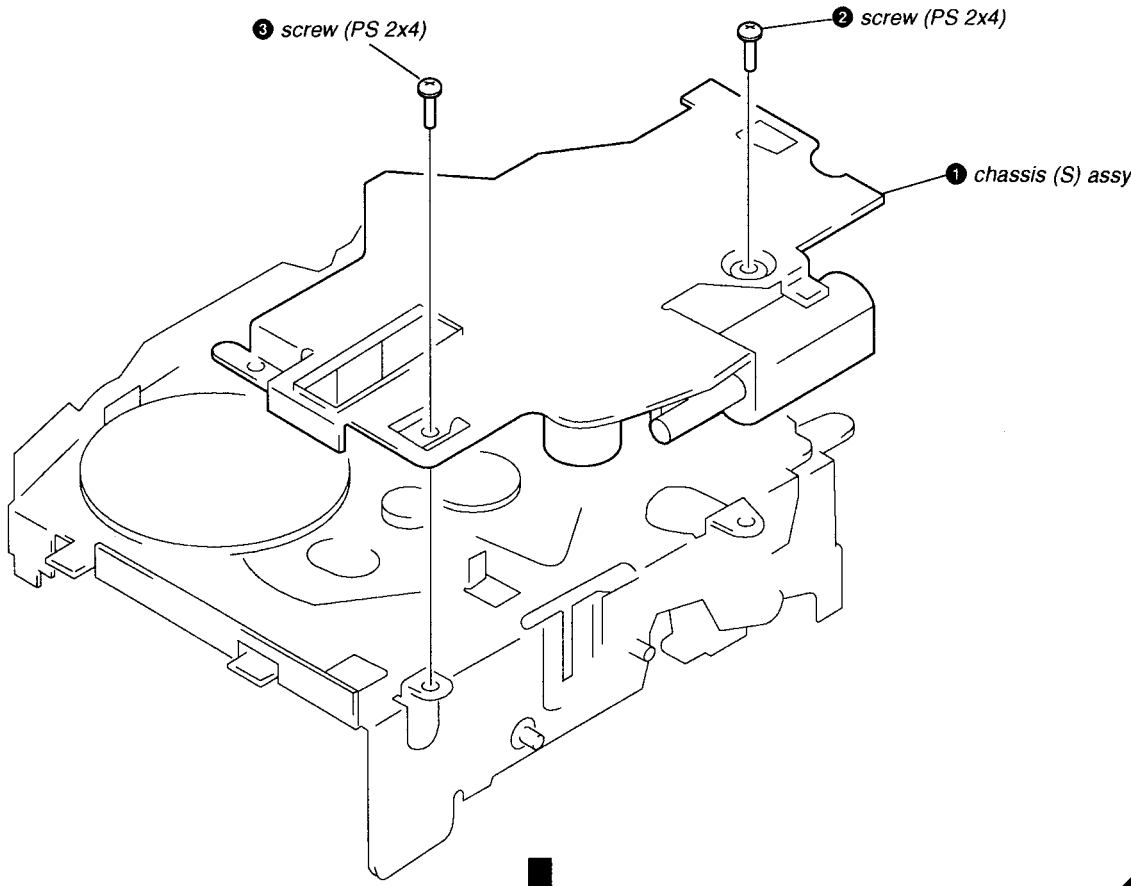


## LEVER (MODE)

1. Align △ mark on the rotary switch with hole in the lever (mode).
2. Fit on positions Ⓐ, Ⓑ and Ⓒ and install the lever (mode).

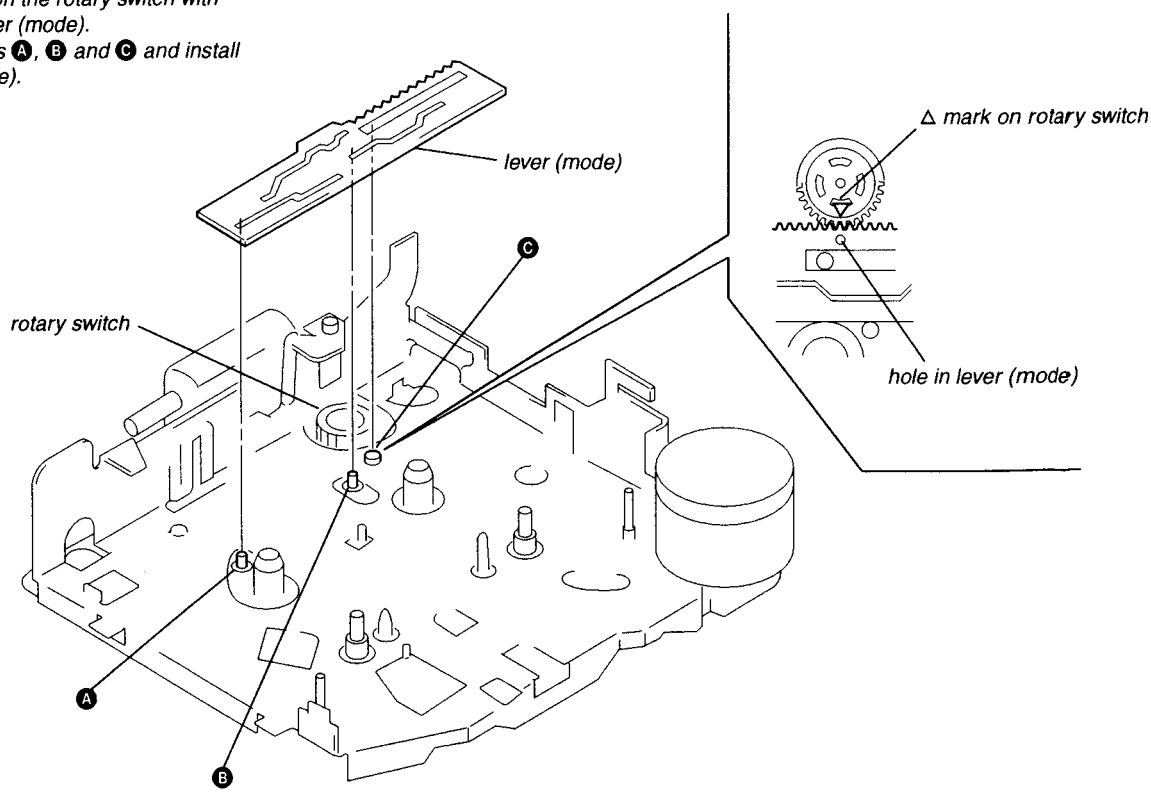

## LEVER (PINCH SELECTION)

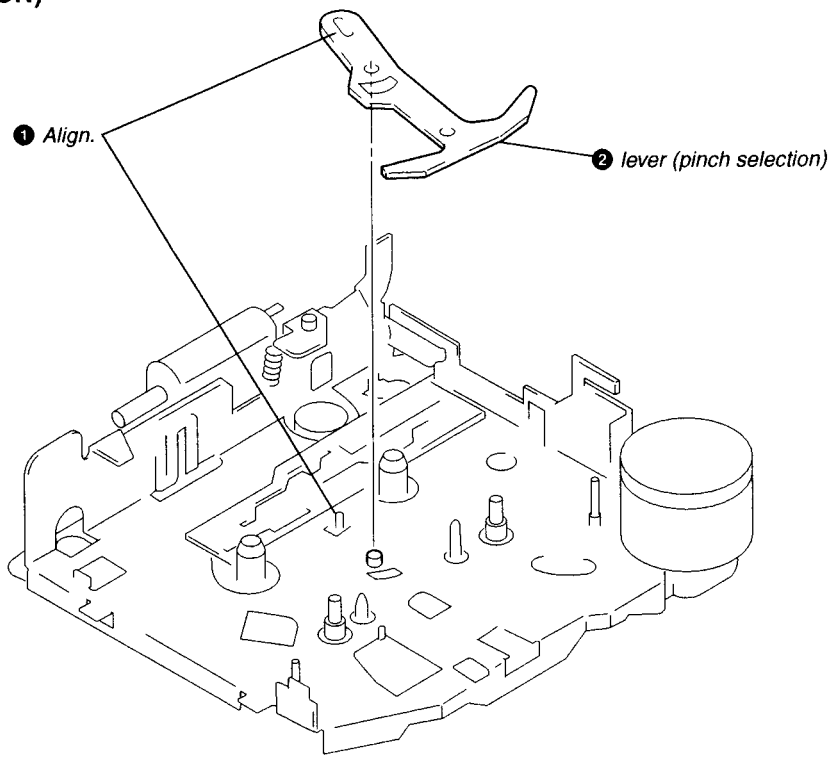


## HEAD PLATE ASSY

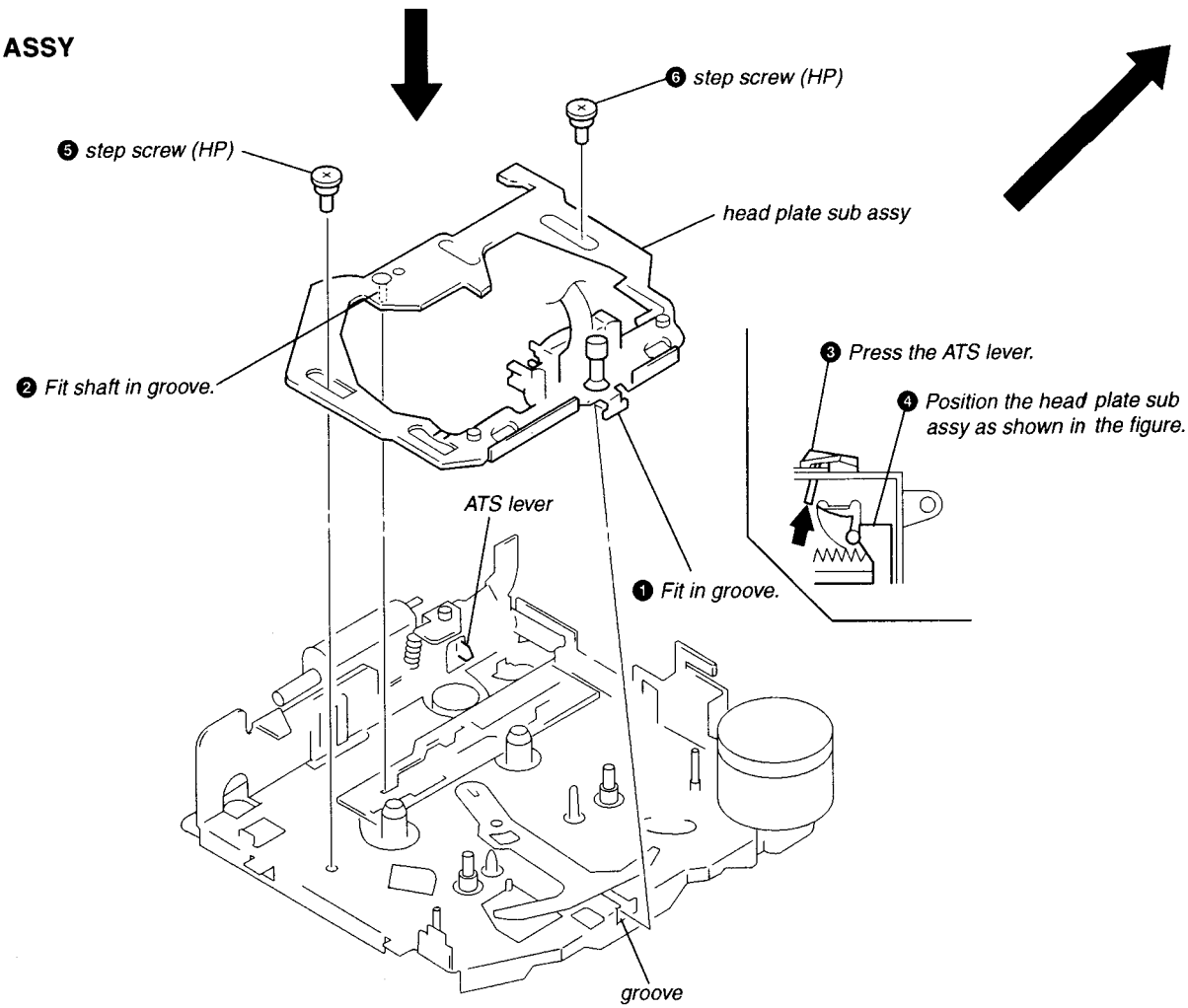

## LEVER (PINCH) ASSY

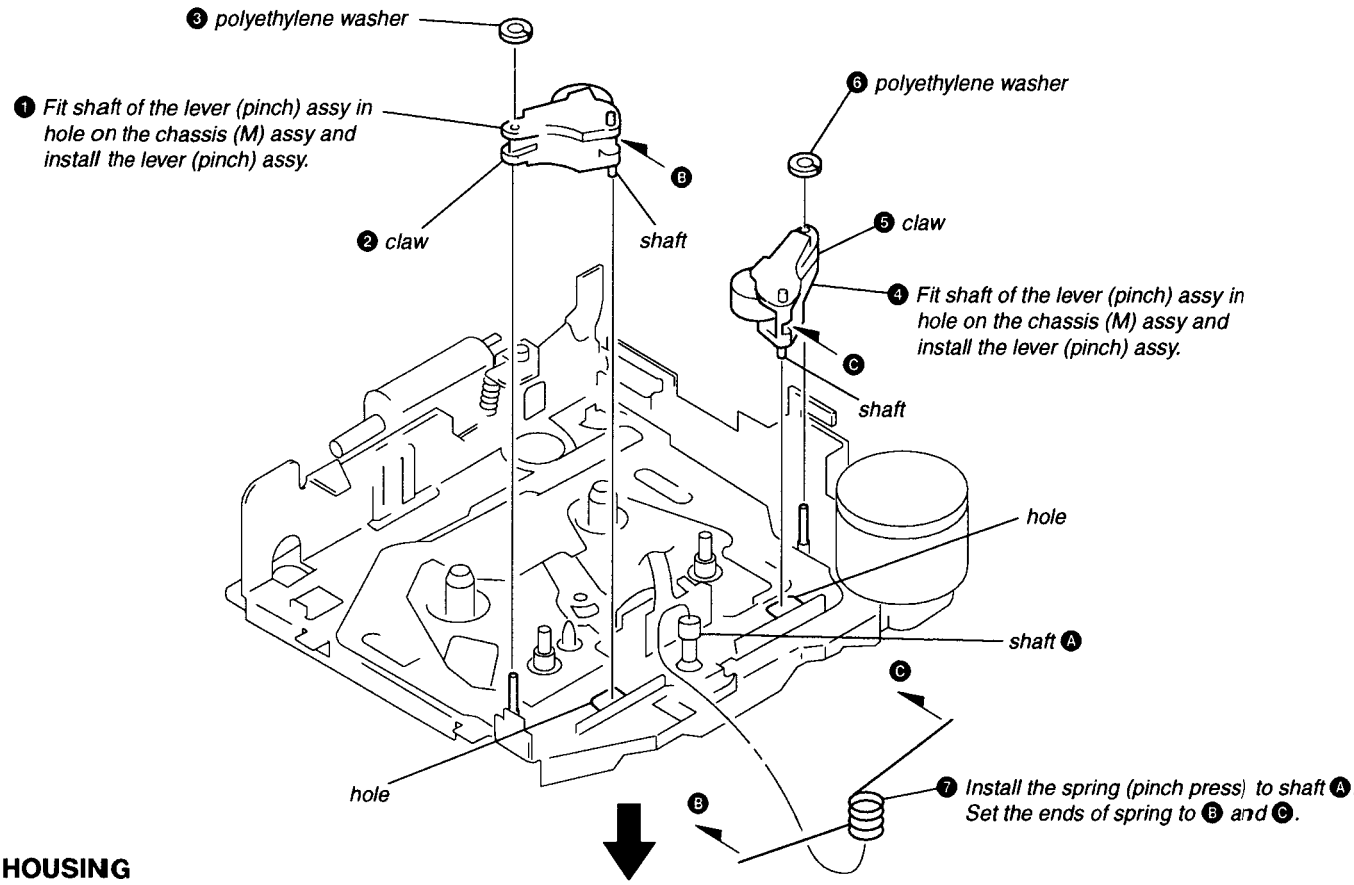


## HOUSING

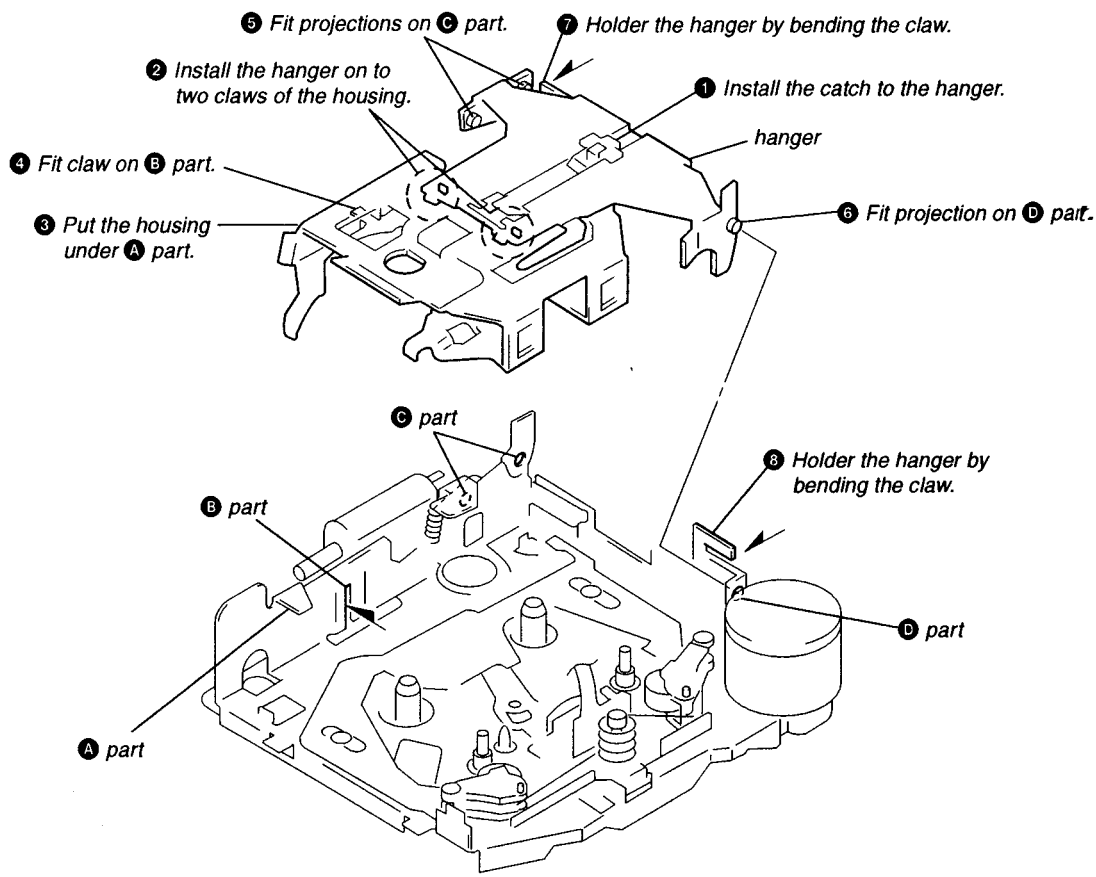

## ARM (SUCTION)

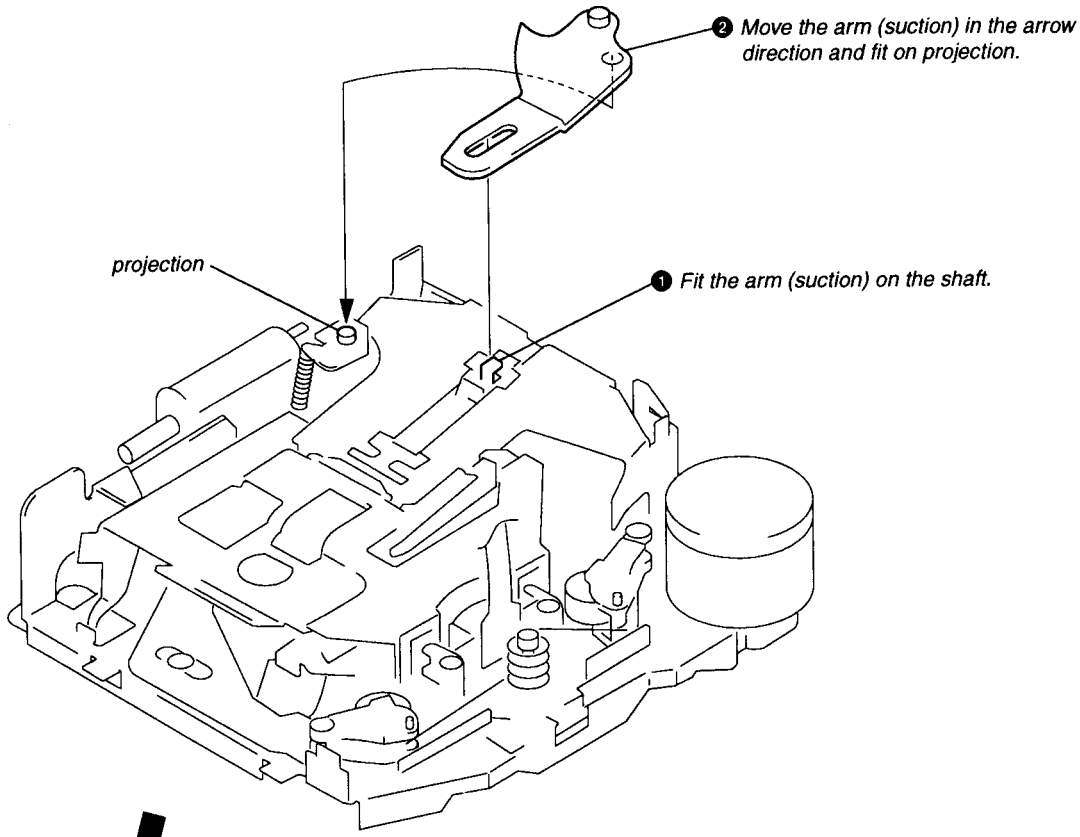


## LEVER (LDG-A) / (LDG-B)

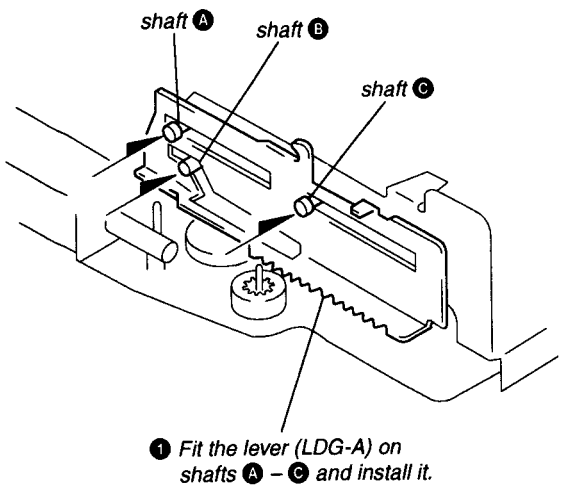


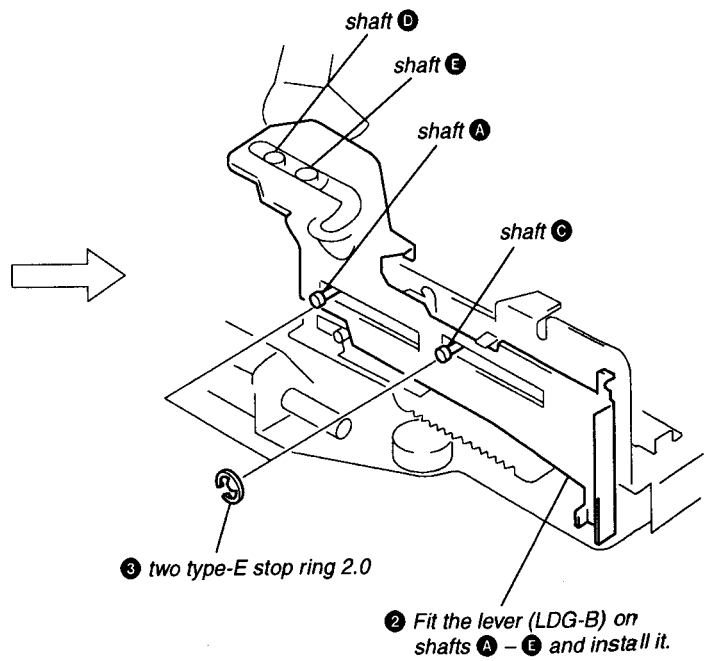

# SECTION 4
# MECHANICAL ADJUSTMENTS

## PRECAUTION

1. Wipe the following components with an absorbent cotton cloth moistened with alcohol before adjustment :
   PB head　　Pinch roller
   Idler　　Rubber belt
   Capstan
2. Demagnetize the PB head using a head demagnetizer.
3. Be careful not to use a magnetized screwdriver.
4. After the adjustment is completed, lock the adjustment parts using screws.
5. Unless otherwise specified, make adjustments at the specified voltage (14.4 V).

### Torque Measurement

| Mode | Torque Meter | Meter Reading |
|---|---|---|
| FWD | CQ-102C | 35 – 65 g • cm (0.49 – 0.90 oz • inch) |
| FWD Back Tension | | 0.5 – 5.0 g • cm (0.01 – 0.07 oz • inch) |
| REV | CQ-102RC | 35 – 65 g • cm (0.49 – 0.90 oz • inch) |
| REV Back Tension | | 0.5 – 5.0 g • cm (0.01 – 0.07 oz • inch) |
| FF, REW | CQ-201B | 60 – 200 g • cm (0.83 – 2.78 oz • inch) |

### Tape Tension Measurement

| Mode | Tension Meter | Meter Reading |
|---|---|---|
| FWD | CQ-403A | more than 60 g (more than 2.12 oz) |
| REV | CQ-403R | |

# SECTION 5
# ELECTRICAL ADJUSTMENTS

See the adjustment location from on page 26 for the adjustment.

**DECK SECTION**　**0 dB = 0.775 V**

### Tape Speed Adjustment

**Procedure :**

1. Put the set into the FWD PB mode.

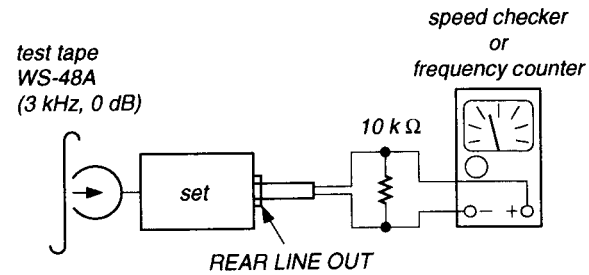


**Specification :** Constant speed

| Speed checker | Frequency counter |
|---|---|
| – 1.5 to + 2.5 % | 2,955 to 3,075 Hz |

**Adjustment Location :** See page 26.

### DOLBY Level Adjustment

**setting :**

| | |
|---|---|
| SHIFT button | : ON (light up SET UP and PLAY MODE) |
| Preset 3 (PLAY MODE) button | : NR off |
| SOUND (BAS) button | : Center |
| SOUND (TRE) button | : Center |
| SOUND (BAL) button | : Center |
| SOUND (FAD) button | : Center |
| SOUND (VOL) button | : Maximum |

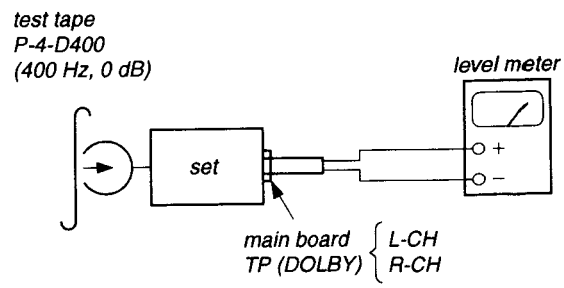


**Procedure :**

1. Put the set into the FWD PB mode.
2. Adjust RV231 (L-CH) and RV241 (R-CH) so that level meter reading is – 6 ± 1 dB (0.35 to 0.44 V).

**Adjustment Location :** See page 26.

## GEAR (LDG-FT)

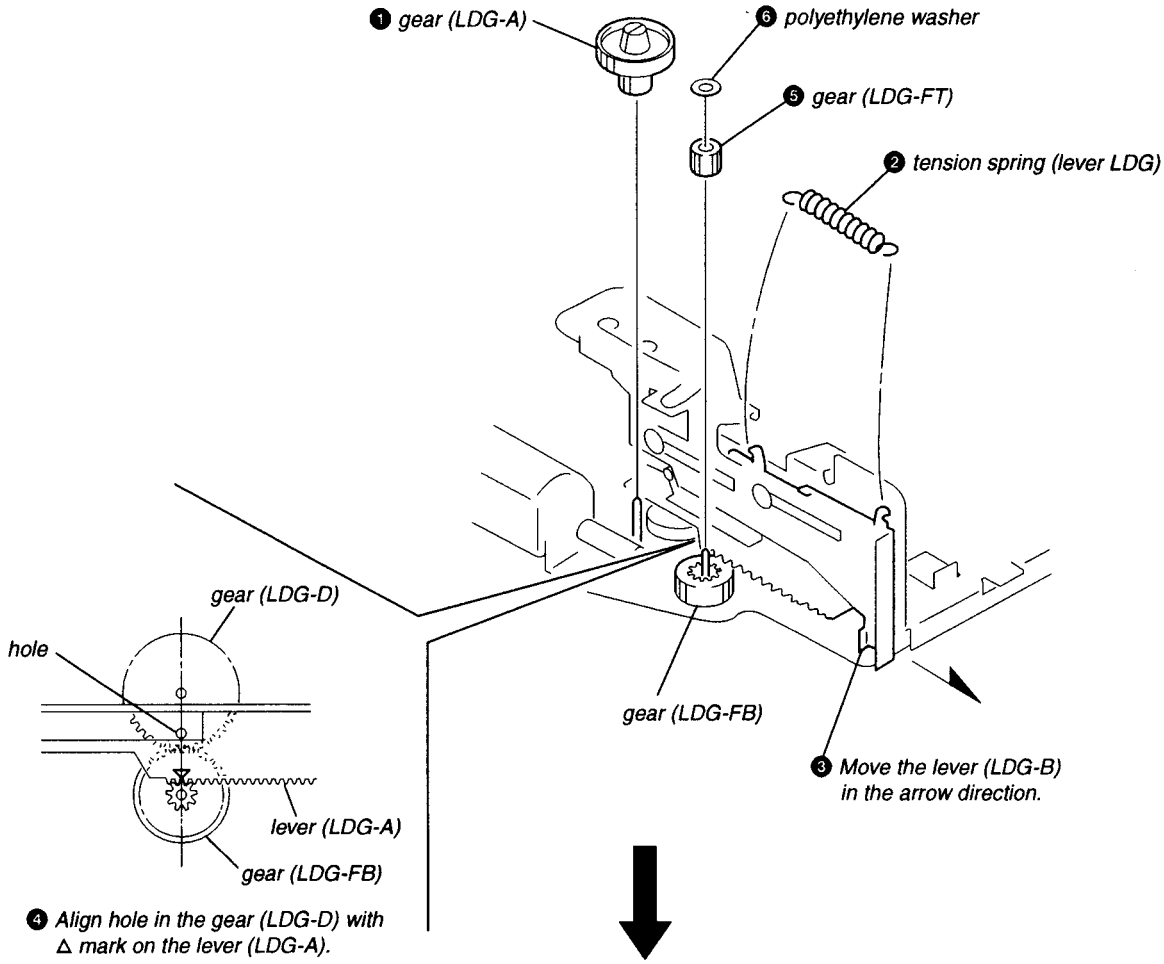


## GUIDE (C)

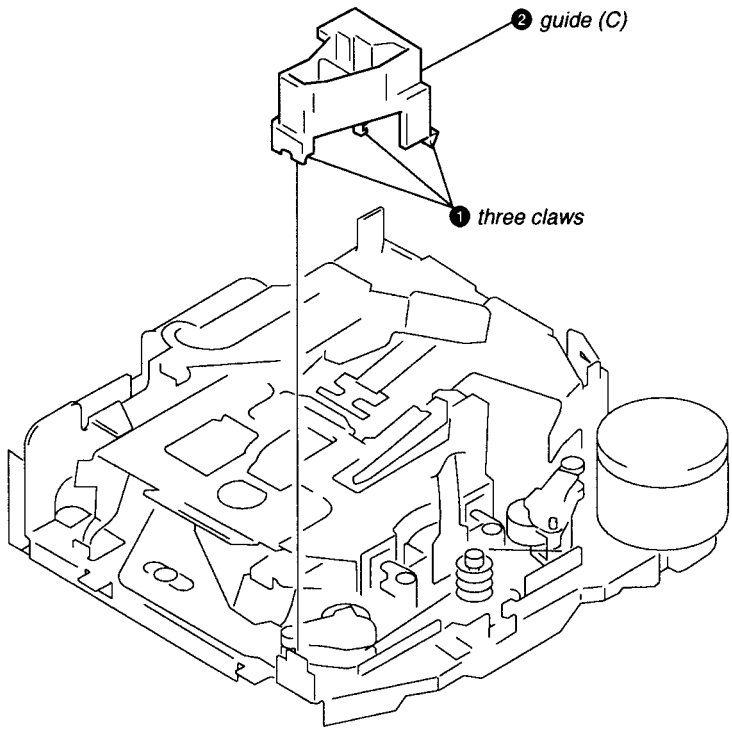

**TUNER SECTION** **0 dB = 1 μV**

**Cautions during repair**
When the tuner unit is defective, replace it by a new one because its internal block is difficult to repair.

## TEST MODE

This set have the test mode function. In the test mode, FM Auto Scan/Stop Level and MW Auto Scan/Stop Level adjustments can be performed easier than it in ordinary procedure.

<Set the Test Mode>
1. Set the "OFF" mode.
2. Push the preset [4] button.
3. Push the preset [5] button.
4. Press the preset [1] button for more than two seconds.
5. Then the display indicates all lights, the test mode is set.

<Release the Test Mode>
1. Push the [OFF] button.

### Note on Adjustment

The adjustments of tuner section, should be performed according to the following sequence.
1. FM Auto Scan/Stop Level Adjustment
2. FM Stereo Separation Adjustment
3. FM Noise Focus Adjustment
4. FM RDS S-Meter Adjustment
5. MW Auto Scan/Stop Level Adjustment

### FM Auto Scan/Stop Level Adjustment

**Setting :**
SOURCE button : FM

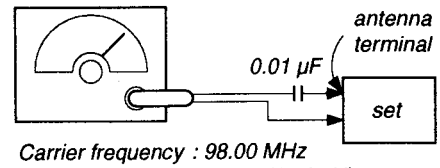


*Carrier frequency : 98.00 MHz*
*Output level : 22 dB (12.6 μV)*
*Mode : mono*
*Modulation : 1 kHz, 22.5 kHz deviation (30%)*

**Procedure :**
1. Set to the test mode.
2. Push the [SOURCE] button and set to FM.

Display

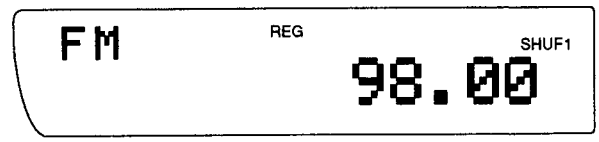


3. Push the preset [3] button.

Display

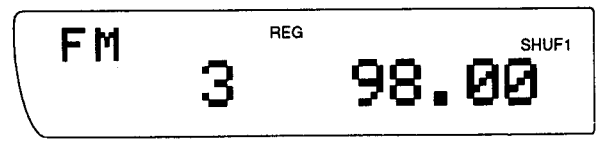


4. Adjust with the volume RV2 on TU10 so that the "FM" indication turns to "FM0" indication on the display window.
But, in case of already indicated "FM0", turn the RV2 so that put out light "0" indication and adjustment.

Display

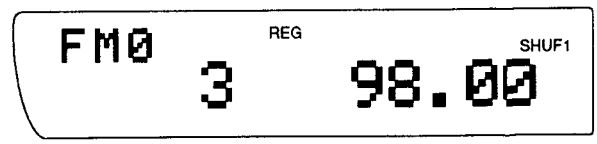


**Adjustment Location :** See page 26.


www.manualscenter.com

### FM Stereo Separation Adjustment

**Setting :**

SOURCE button : FM

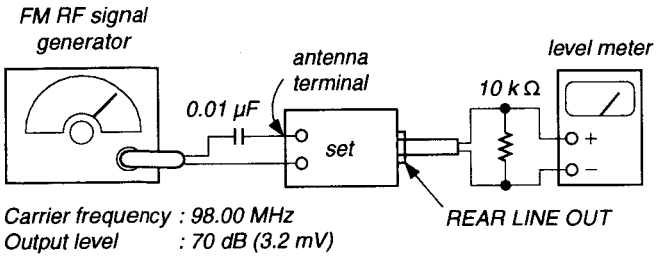


*Carrier frequency : 98.00 MHz*
*Output level : 70 dB (3.2 mV)*
*Mode : stereo*
*Modulation : main : 1 kHz, 20 kHz deviation (26.5%)*
*sub : 1 kHz, 20 kHz deviation (26.5%)*
*19 kHz pilot : 7.5 kHz deviation (10%)*

**Procedure :**

| FM stereo signal generator output channel | Level meter connection | Level meter reading (dB) |
|---|---|---|
| L-CH | L-CH | Ⓐ |
| R-CH | L-CH | Ⓑ Adjust RV4 on TU10 for minimum reading. |
| R-CH | R-CH | Ⓒ |
| L-CH | R-CH | Ⓓ Adjust RV4 on TU10 for minimum reading. |

L-CH stereo separation : Ⓐ – Ⓑ
R-CH stereo separation : Ⓒ – Ⓓ
The separations of both channels should be equal.

**Specification :** Separation more than 26 dB

**Adjustment Location :** See page 26.

### FM Noise Focus Adjustment

**Setting :**

SOURCE button : FM

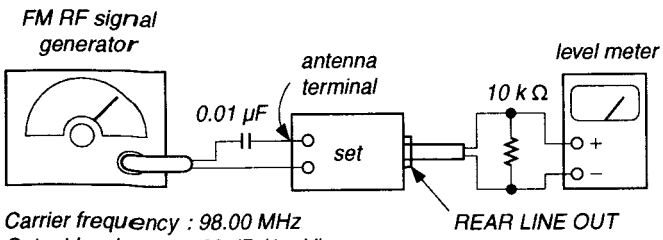


*Carrier frequency : 98.00 MHz*
*Output level : 60 dB (1 mV)*
*Mode : mono*
*Modulation : 1 kHz, 75 kHz deviation (100%)*

**Procedure :**

1. Tune the 98.00 MHz.
2. The then output level is supposing that 0 dB.
3. Adjust with the volume RV3 on TU10 so that the output level is – 32 ± 2 dB then signal generator input set to – 20 dB.

**Adjustment Location :** See page 26.

### FM RDS S-Meter Adjustment

**Setting :**

SOURCE button : FM

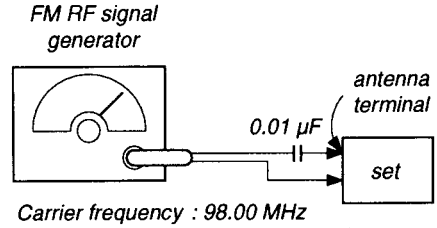


*Carrier frequency : 98.00 MHz*
*Output level : 35 dB (56.2 μV)*
*Mode : mono*
*Modulation : no modulation*

**Procedure :**

1. Set to the test mode. (See page 23.)
2. Push the [SOURCE] button and set to FM.

Display

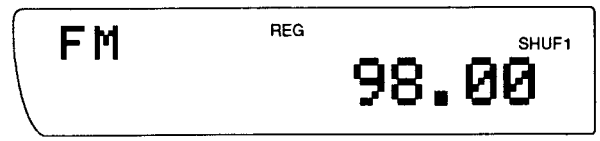


3. Push the preset [3] button.

Display

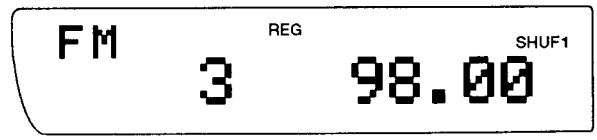


4. Push the preset [10] button.
5. Adjust RV110 so that the display indication is "16.0".

Display

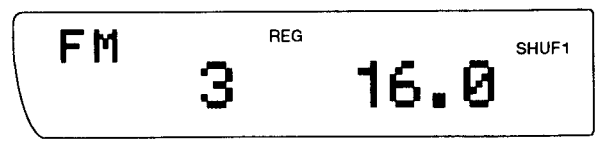


**Specification :** Display indication : 15.8 to 16.2.

**Adjustment Location :** See page 26.

**MW Auto Scan/Stop Level Adjustment**

**Setting :**

SOURCE → MODE button : MW

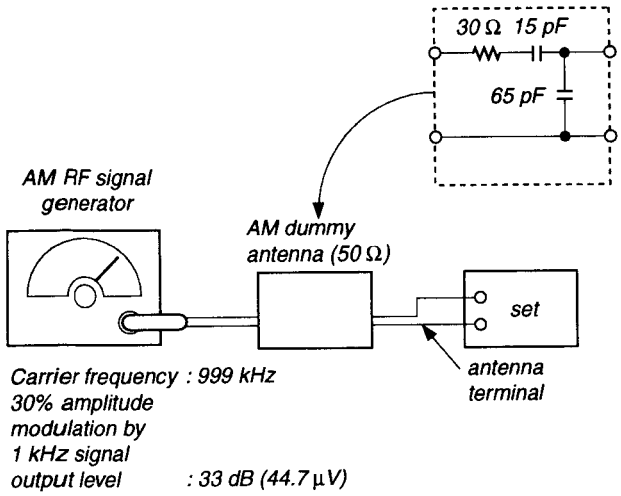


**Procedure :**

1. Set to the test mode. (See page 23.)
2. Push the [SOURCE] button.
3. Push the [MODE] button and set to MW.

Display

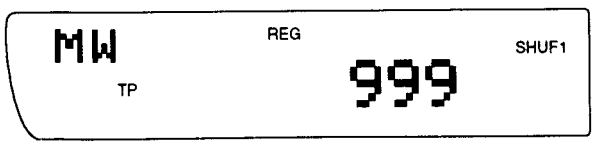


4. Push the preset [3] button.

Display

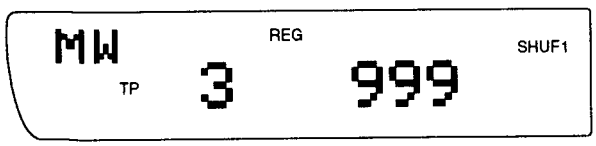


5. Adjust with the volume RV1 on TU10 so that the "MW" indication turns to "MW0" indication on the display window. But, in case of already indicated "MW0", turn the RV1 so that put out light "0" indication and adjustment.

Display

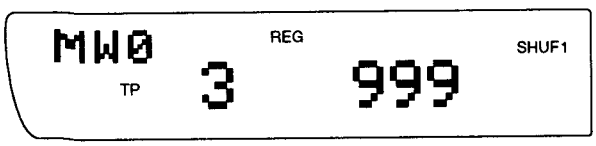


**Adjustment Location :** See page 26.



www.manualscenter.com

**Adjustment Location :** tuner unit (TU10)

*–set upper view–*

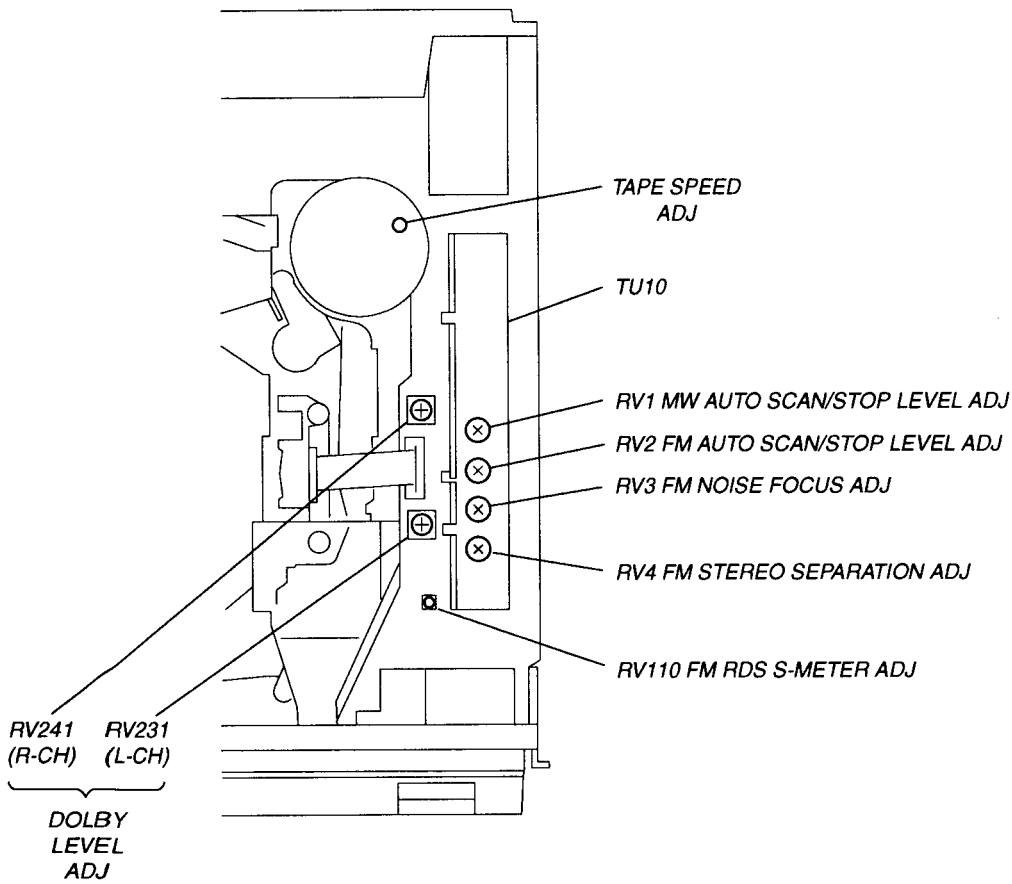


*–set bottom view–*

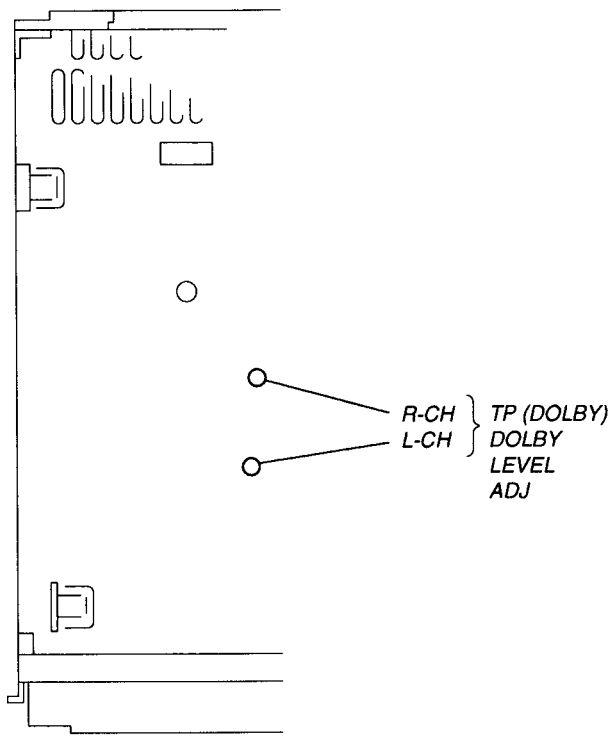

# SECTION 6
# DIAGRAMS

## 6-1. IC PIN DESCRIPTIONS

### • IC101 MN1884820Y5F (TUNER SYSTEM CONTROL)

| Pin No. | Pin Name | I/O | Pin Description |
|---|---|---|---|
| 1 – 6 | — | — | Not used. |
| 7 | VDD | — | Power supply pin |
| 8 | X1 | I | Ceramic oscillator connection input pin (8 MHz) |
| 9 | X2 | O | Ceramic oscillator connection output pin (8 MHz) |
| 10 | GND | — | GND |
| 11 | XI | I | Connect to GND. |
| 12 | — | — | Not used. |
| 13 | XO | — | Connect to GND. |
| 14 | RESET | I | Reset input pin |
| 15 | RDSCKI | I | RDS clock input pin |
| 16 | BU IN | I | Back-up detection input pin |
| 17 | BUSON | I | Bus interface bus on input pin |
| 18 – 21 | POS3 – POS0 | I | Position signal detection input pin |
| 22 | — | — | Connect to GND. |
| 23 | MTLIN | I | Auto metal detection input pin |
| 24 | AMSIN | I | At AMS, music with/without detection input pin |
| 25 | TAPIN | I | Connect to GND. |
| 26 | DOLON | I/O | DOLBY control input/output pin |
| 27 | — | — | Not used. |
| 28 | TAPMUT | O | TAPE mute control output pin |
| 29 | MTLON | O | METAL control output pin |
| 30 | RDSSI | I | RDS data input pin |
| 31 | — | — | Connect to GND. |
| 32 | CM-ON | O | Capstan motor control output pin |
| 33 | TAP-ON | O | TAPE power control output pin |
| 34 | LMEJ | O | Loading motor control output pin (Eject direction) |
| 35 | LMLOD | O | Loading motor control output pin (Loading direction) |
| 36 | — | — | Connect to GND. |
| 37 | REEL | I | Rotation detection input pin of reel table. |
| 38 | PLL-DI | I | PLL data input pin |
| 39 | PLL-DO | O | PLL data output pin |
| 40 | PLL-CLK | O | PLL clock output pin |
| 41 | CE | O | PLL chip enable output pin |
| 42 | RQ | O | Bus interface request output pin |
| 43 | LINK-OFF | O | Bus interface link output pin |
| 44 | SCK | I | Bus interface serial clock-in input pin |
| 45 | SI | I | Bus interface serial data-in input pin |
| 46 | SO | I/O | Bus interface serial data-out input/output pin |
| 47 | VDD | — | Power supply pin |
| 48 | AVDD | — | Power supply pin for A/D conversion input. |
| 49 | VREF | — | Reference voltage input pin for A/D conversion input. (+ side) |
| 50 – 52 | — | I | Connect to GND. |
| 53 | MUTE-SEL | I | Connect to GND. |
| 54, 55 | DIST-SEL1, 0 | I | Destination select setting pin (Fixed at "L" .) |
| 56 | S-METER(AM) | I | MW S-meter voltage detection input pin |
| 57 | S-METER(FM) | I | FM S-meter voltage detection input pin |

www.manualscenter.com

| Pin No. | Pin Name | I/O | Pin Description |
|---|---|---|---|
| 58 – 60 | — | — | Connect to GND. |
| 61 | MODE2 | O | TUNER-ON output pin |
| 62 | — | O | Not used. |
| 63 | RECEIVE | O | SEEK OUT output pin |
| 64 | AM-ON | O | AM-ON output pin |
| 65 | MODE1 | O | FM-ON output pin |
| 66 | TUNER-MUTE | O | MUTE output pin |
| 67 | AF-SEEK | O | Connect to GND. |
| 68 | — | — | Not used. |
| 69 | — | O | Fixed at "H". |
| 70 | ST-IN/MONO | I/O | Used in conjunction with ST indicator input/MONO output. |
| 71 | SD-IN | I | Signal detecter input pin |
| 72 | — | — | Not used. |
| 73 | $\overline{\text{FWD}}$/REV | O | $\overline{\text{Forward}}$/Reverse detection output pin |
| 74 | AMSON | O | TAPE AMS control output pin |
| 75 – 80 | — | — | Not used. |

| Pin No. | Pin Name | I/O | Pin Description |
|---|---|---|---|
| 60 | $\overline{\text{RESET}}$ | I | Reset input |
| 61 | SIRCS | I | Remote commander input |
| 62 | BU-IN | I | Back-up power detection input |
| 63 | $\overline{\text{DOORSW}}$ | I | Door open/close switch |
| 64 | $\overline{\text{ACCIN}}$ | I | Accessory power detection input |
| 65 | $\overline{\text{NOSESW}}$ | I | Detachable panel detection input |
| 66 | $\overline{\text{TELMUT}}$ | I | Telephone mute detection input |
| 67 | KEYACK | I | Key input acknowledge |
| 68 | VDD | — | Power supply for microcomputer. |
| 69 | OSCOUT | O | Main ceramic oscillator output pin (5 MHz) |
| 70 | OSCIN | I | Main ceramic oscillator input pin (5 MHz) |
| 71 | GND | — | GND for microcomputer. |
| 72 | XT-OUT | O | Sub crystal oscillator output pin (32.768 kHz) |
| 73 | XT-IN | I | Sub crystal oscillator input pin (32.768 kHz) |
| 74 | AVDD | — | Power supply for A/D conversion. |
| 75 | AVREF | — | Reference power supply for A/D conversion. |
| 76, 77 | KEYIN0, 1 | I | Key input 0, 1 |
| 78, 79 | KEYSEL0, 1 | I | Key function select setting input 0, 1 |
| 80 | DESTSEL | I | Fixed at "L". |

www.manualscenter.com

• **IC501 μPD78058GC-462-3B9 (SYSTEM CONTROL)**

| Pin No. | Pin Name | I/O | Pin Description |
|---|---|---|---|
| 1 | RC-IN0 | I | Rotary commander A/D conversion input 0 |
| 2 | $\overline{\text{ILL-IN}}$ | I | Illumination line detection input |
| 3 | NIL | I | Connect to GND. |
| 4 | AVSS | — | GND for A/D conversion. |
| 5 | LCDANG | O | Output for LCD view angle adjustment. |
| 6 | NIL | I | Connect to GND. |
| 7 | AVREF | — | Reference voltage for D/A conversion. |
| 8 | RE-0 | I | Rotary encoder input 0 |
| 9 | RE-1 | I | Rotary encoder input 1 |
| 10 | SUB-F | O | Connect to GND. |
| 11 | COLSEL | O | Connect to GND. |
| 12 | LCDSO | O | LCD serial data output |
| 13 | LCDCKO | O | LCD serial clock output |
| 14 | LCDCE | O | LCD serial chip enable output |
| 15 | $\overline{\text{LCDINH}}$ | O | LCD blank display control output |
| 16 | UNISI | I | Serial data input |
| 17 | UNISO | O | Serial data output |
| 18 | UNICKI | I | Serial clock input |
| 19 | UNICKO | O | Serial clock output |
| 20 | $\overline{\text{BUSON}}$ | O | BUS ON control output |
| 21 | $\overline{\text{SYSRST}}$ | O | System reset control output |
| 22 | AMPON | O | Power amplifier power control output |
| 23, 24 | — | — | Not used. |
| 25 | PW-ON | O | System power control output |
| 26 | ILL-ON | O | Illumination power control output |
| 27 | COLOR | I/O | Illumination color select control input/output |
| 28 | — | — | Not used. |
| 29 – 32 | — | I | Connect to GND. |
| 33 | GND | — | GND of microcomputer. |
| 34, 35 | — | I | Connect to GND. |
| 36 – 39 | — | — | Not used. |
| 40 | AD-ON | O | Power control output for A/D conversion. |
| 41 | — | — | Not used. |
| 42 | PW-SEL | I | Power select initial setting input |
| 43 | RC-IN1 | I | Rotary commander A/D conversion input 1 |
| 44 | $\overline{\text{TEST}}$ | I | TEST mode setting input |
| 45 | $\overline{\text{EQ-SEL}}$ | I | Equalizer connection with/without initial setting input |
| 46 | BEEP | O | Buzzer control output |
| 47 | MUT | O | System mute control output |
| 48 | VOLCE | O | Electric volume serial chip enable output |
| 49 | — | — | Not used. |
| 50 | VOLCKO | O | Electric volume serial clock output |
| 51 | — | — | Not used. |
| 52 | VOLSO | O | Electric volume serial data output |
| 53 – 56 | — | — | Not used. |
| 57 | $\overline{\text{DIMMER}}$ | I/O | Dimmer control input/output |
| 58, 59 | — | — | Not used. |

## 6-2. BLOCK DIAGRAM — TC SECTION —

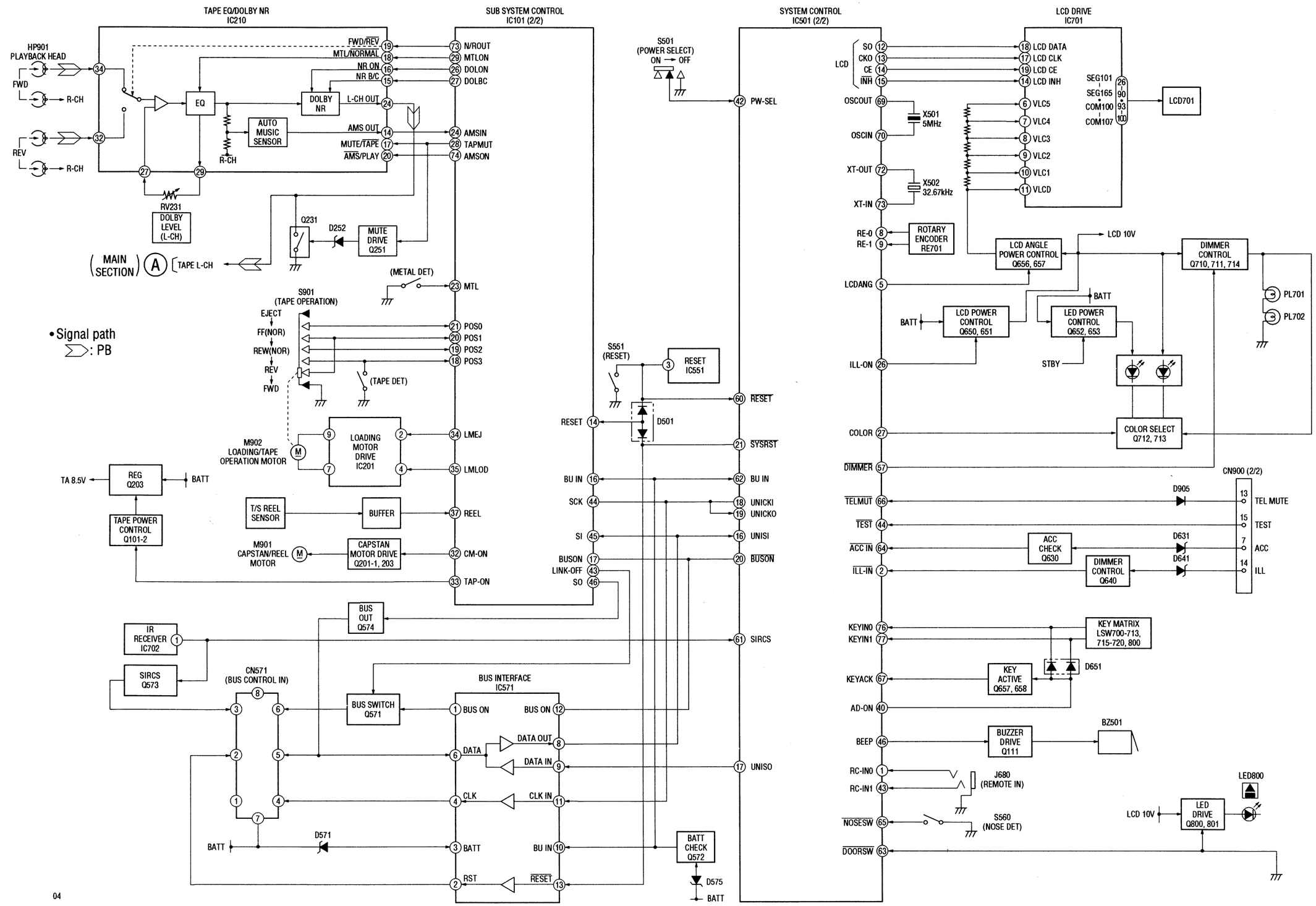






www.manualscenter.com

## 6-3. BLOCK DIAGRAM — MAIN SECTION —

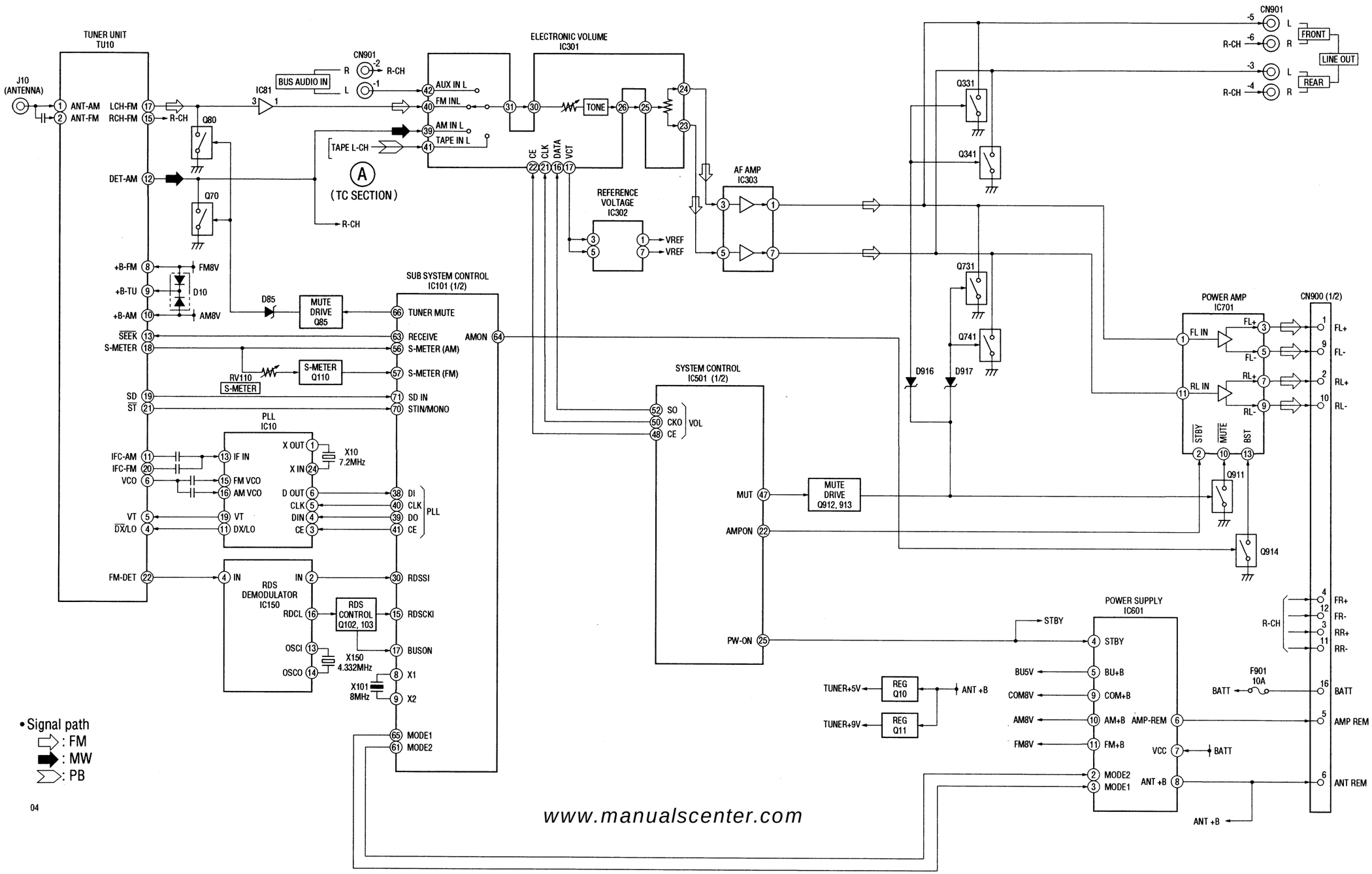


www.manualscenter.com

## 6-4. PRINTED WIRING BOARDS — MAIN SECTION —

• **Semiconductor Location**

| Ref. No. | Location | Ref. No. | Location |
|---|---|---|---|
| D10 | E-13 | IC201 | G-20 |
| D11 | D-9 | IC210 | F-8 |
| D12 | E-9 | IC301 | E-6 |
| D85 | H-10 | IC302 | E-16 |
| D110 | F-16 | IC303 | C-15 |
| D111 | F-5 | IC404 | C-14 |
| D201 | F-21 | IC501 | G-4 |
| D202 | G-21 | IC551 | I-3 |
| D251 | F-14 | IC571 | D-2 |
| D252 | G-7 | IC601 | D-21 |
| D501 | G-3 | IC701 | B-17 |
| D551 | E-2 | | |
| D552 | E-2 | Q10 | D-9 |
| D553 | I-20 | Q11 | E-9 |
| D560 | I-16 | Q70 | F-11 |
| D571 | D-3 | Q80 | H-9 |
| D572 | D-3 | Q85 | G-8 |
| D573 | C-21 | Q90 | H-9 |
| D574 | C-21 | Q101 | G-7 |
| D575 | C-2 | Q102 | H-6 |
| D576 | D-2 | Q103 | H-6 |
| D577 | D-3 | Q110 | F-5 |
| D578 | C-3 | Q111 | H-20 |
| D630 | E-4 | Q201 | G-21 |
| D631 | E-4 | Q202 | F-1 |
| D640 | E-4 | Q203 | F-2 |
| D641 | E-4 | Q231 | F-7 |
| D650 | H-21 | Q241 | F-7 |
| D651 | I-8 | Q251 | G-7 |
| D652 | G-21 | Q331 | B-15 |
| D661 | I-7 | Q341 | B-14 |
| D662 | I-7 | Q431 | B-15 |
| D664 | I-7 | Q441 | B-14 |
| D667 | I-7 | Q571 | C-3 |
| D669 | I-7 | Q572 | C-2 |
| D670 | I-7 | Q573 | E-2 |
| D671 | I-7 | Q574 | D-3 |
| D672 | I-7 | Q630 | E-4 |
| D673 | I-7 | Q640 | E-4 |
| D680 | B-21 | Q650 | H-1 |
| D682 | C-21 | Q651 | H-21 |
| D683 | C-22 | Q652 | G-21 |
| D705 | C-17 | Q653 | H-2 |
| D901 | C-20 | Q655 | G-20 |
| D905 | E-3 | Q656 | H-20 |
| D911 | C-4 | Q657 | I-8 |
| D912 | C-4 | Q658 | I-7 |
| D915 | D-4 | Q731 | B-8 |
| D916 | D-5 | Q741 | B-9 |
| D917 | D-5 | Q751 | B-9 |
| | | Q761 | B-7 |
| IC10 | E-10 | Q911 | D-5 |
| IC81 | H-8 | Q912 | D-4 |
| IC101 | G-6 | Q913 | D-4 |
| IC150 | H-5 | Q914 | C-4 |

**Note :**
- ○— : parts extracted from the component side.
- ● : Through hole.
- ▒ : Pattern on the side which is seen.
  (The other layer's patterns are not indicated.)

www.manualscenter.com

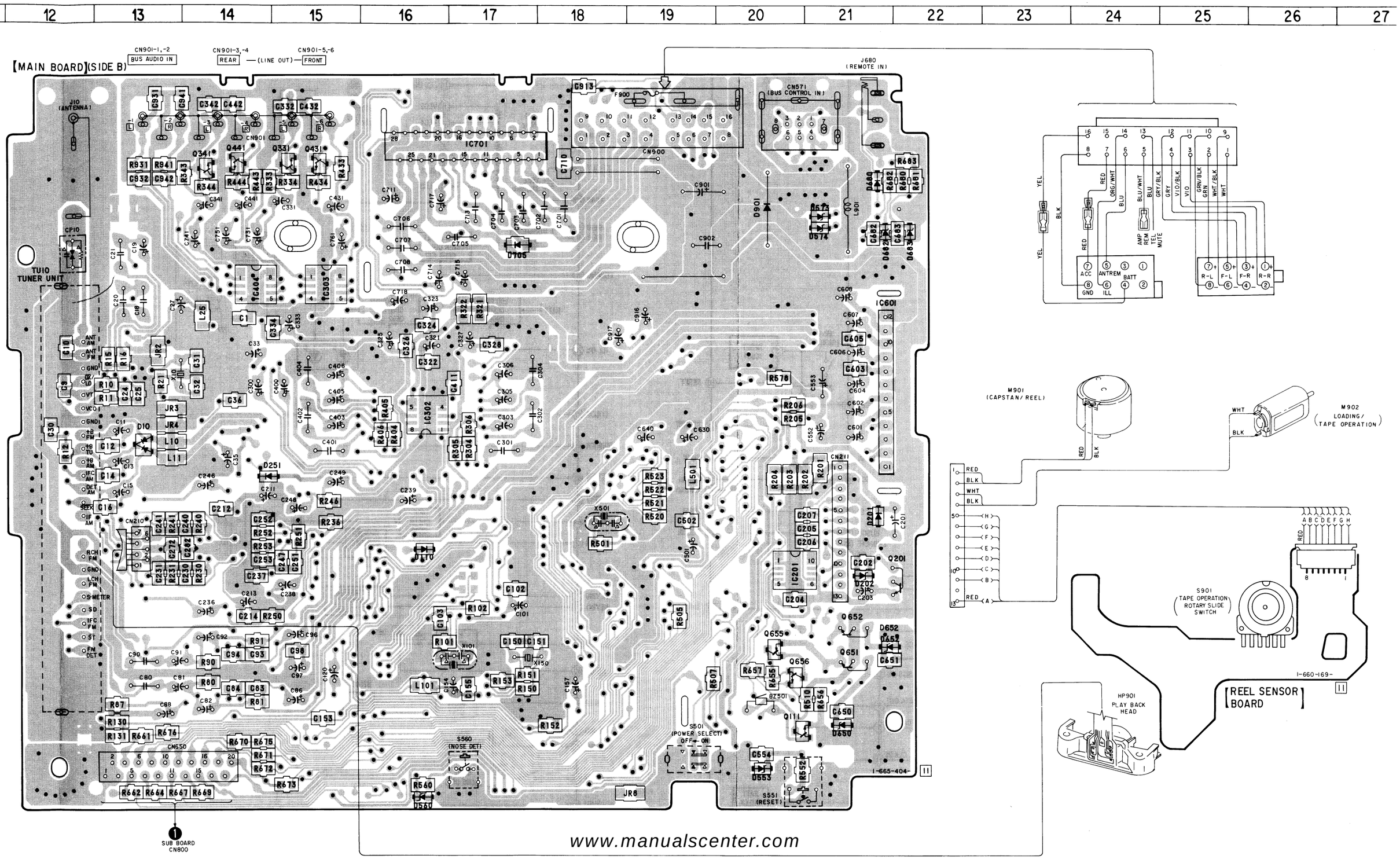


www.manualscenter.com

## 6-5. SCHEMATIC DIAGRAM — MAIN SECTION — • Refer to page 49 for IC Block Diagrams.

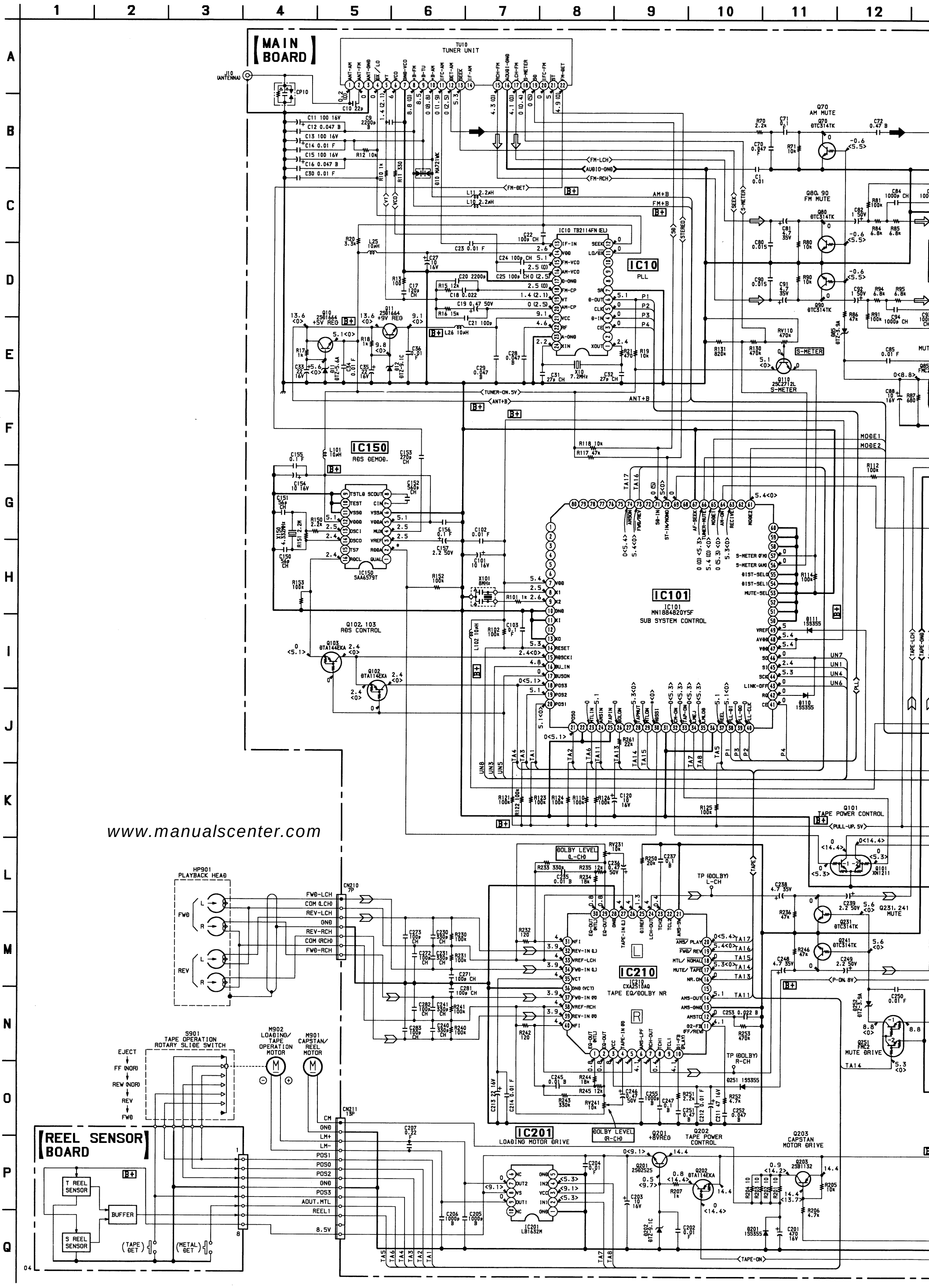


www.manualscenter.com

www.manualscenter.com

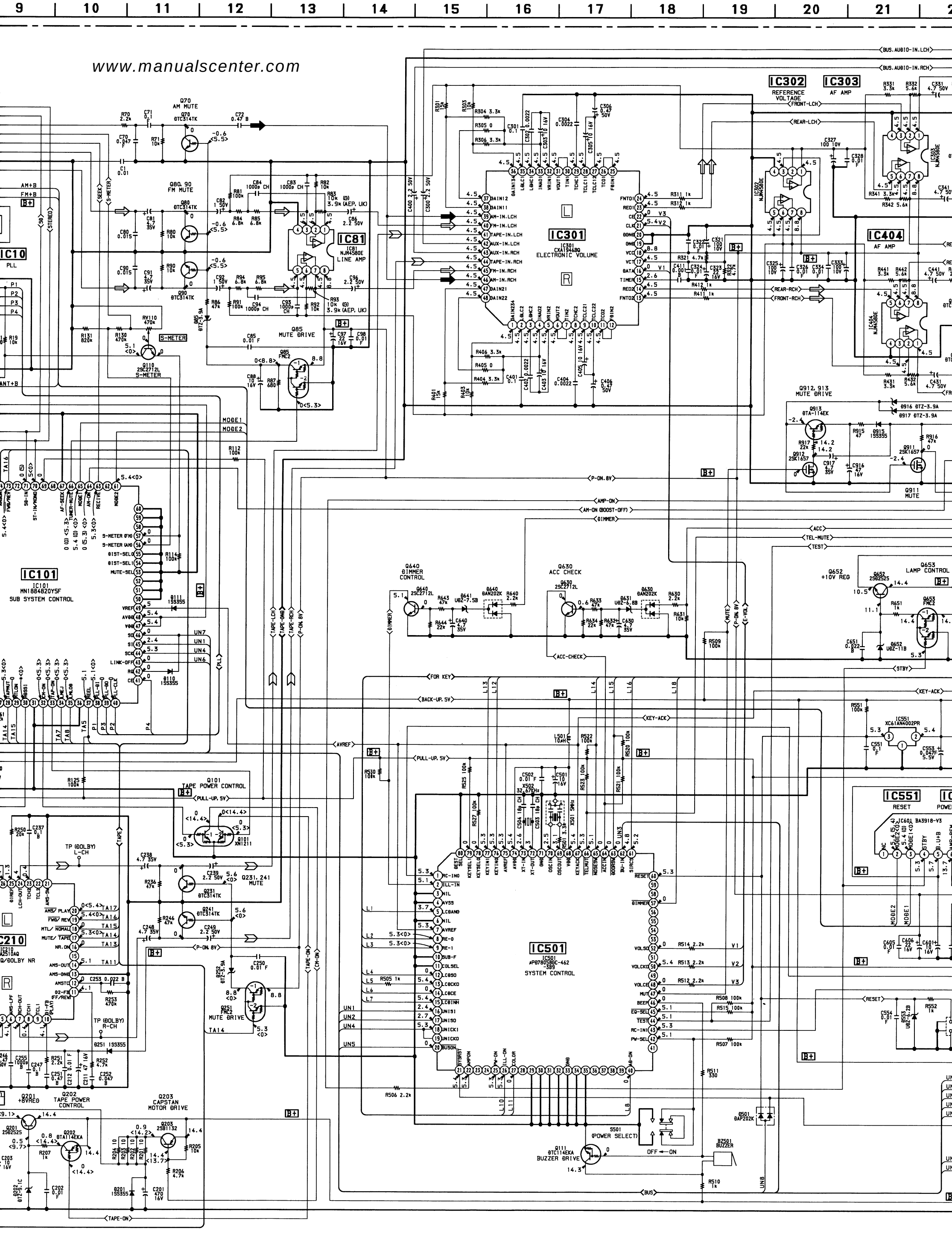

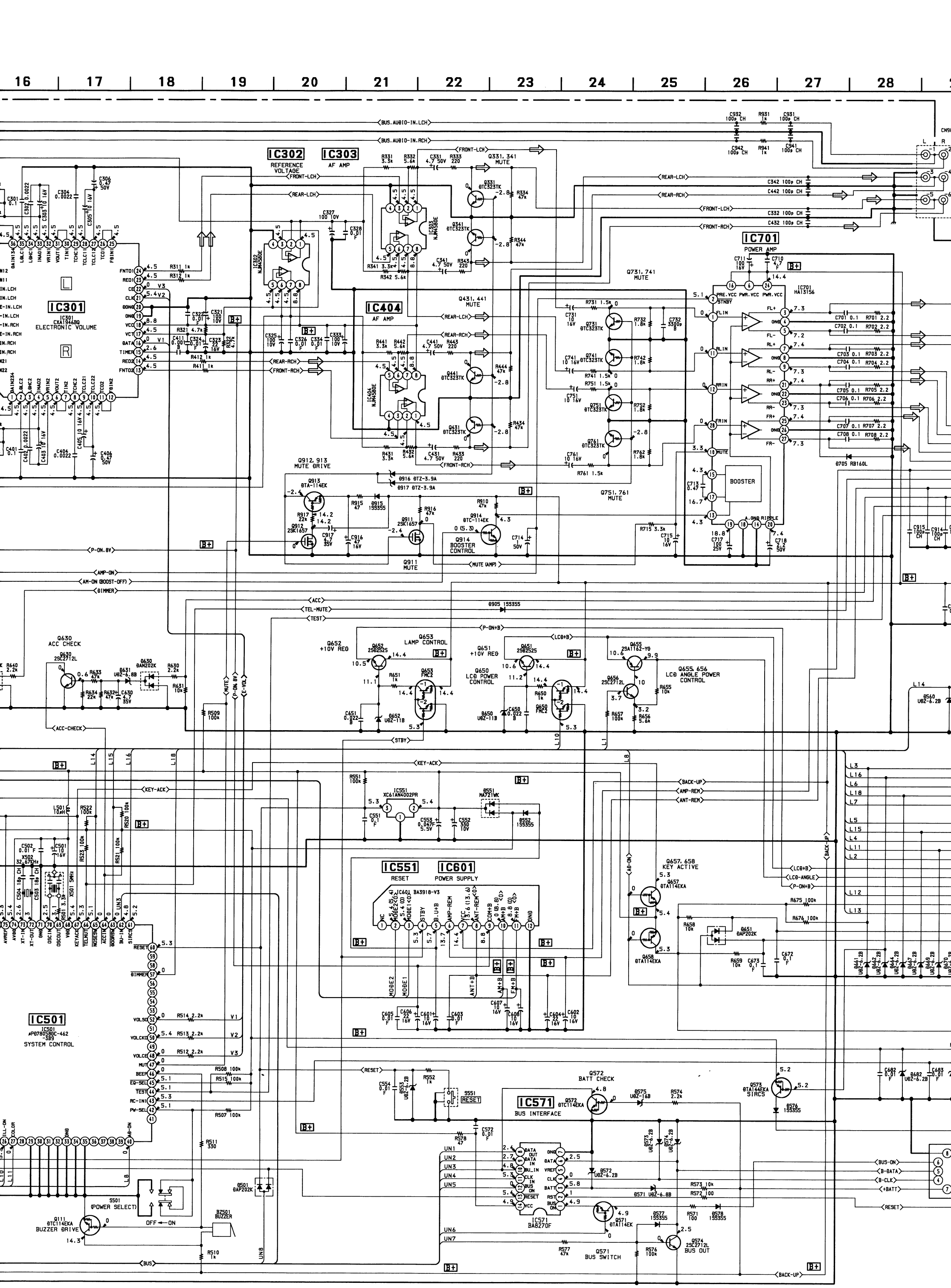




www.manualscenter.com

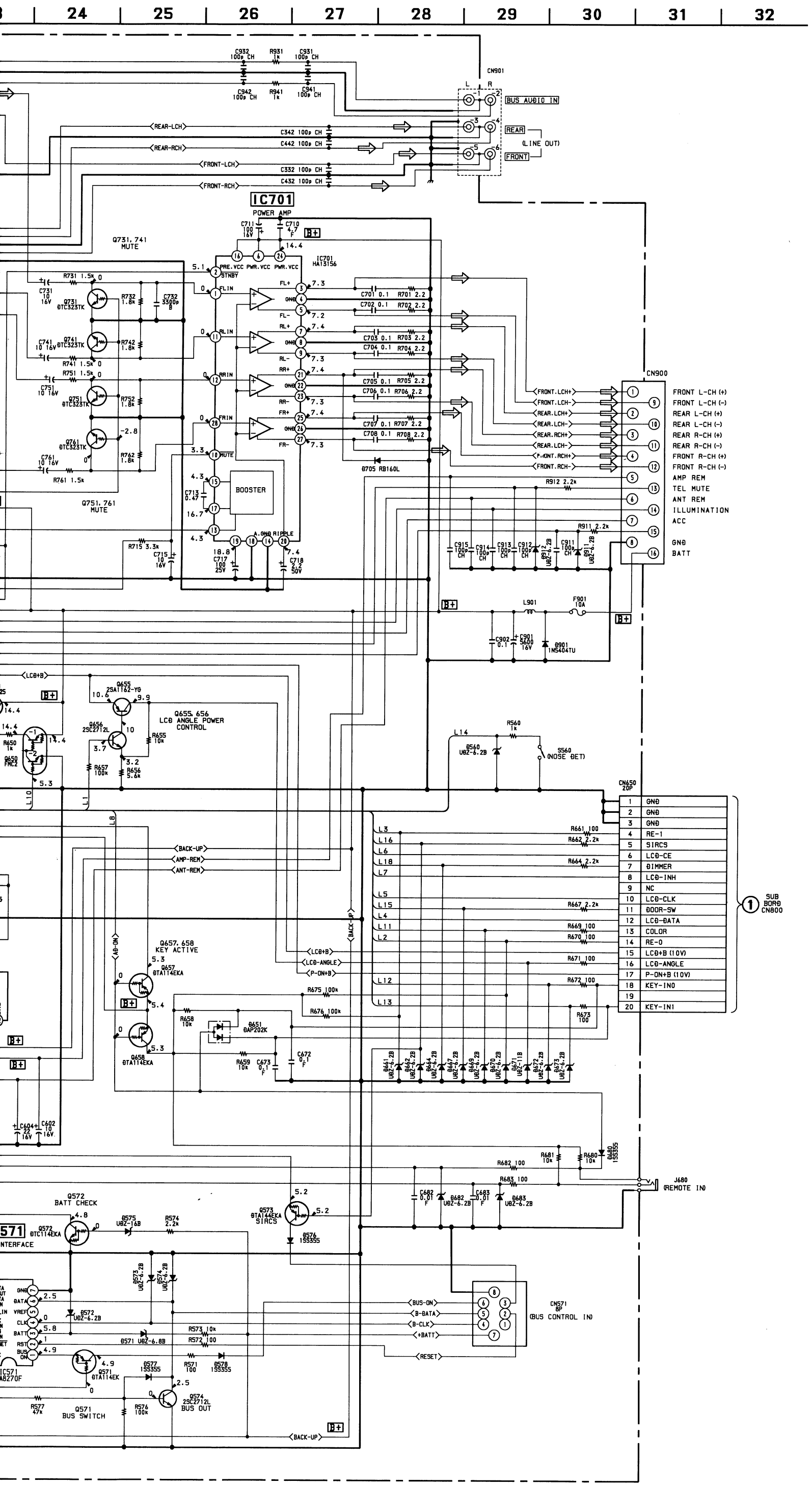


**Note :**

- All capacitors are in μF unless otherwise noted. pF : μμF 50 WV or less are not indicated except for electrolytics and tantalums.
- All resistors are in Ω and 1/4 W or less unless otherwise specified.
- △ : internal component.
- B+ : B+ Line.
- ▭ : adjustment for repair.
- Power voltage is dc 14.4 V and fed with regulated dc power supply from ACC and BATT terminals.
- Voltage is dc with respect to ground under no-signal (detuned) conditions.
- no mark : FM
  ( ) : MW
  < > : PB
  ✱ : impossible measurement point.
- Voltage are taken with a VOM (Input Impedance 10MΩ). Voltage variations may be noted due to normal production tolerance.
- Signal path.
  ⇨ : FM
  ➡ : MW
  ▷ : PB
- Abbreviation
  G : German model



www.manualscenter.com

## 6-6. PRINTED WIRING BOARDS — PANEL SECTION —

• **Semiconductor Location**

| Ref. No. | Location |
|---|---|
| D710 | F-3 |
| D770 | F-8 |
| D771 | E-10 |
| D773 | E-2 |
| D800 | C-13 |
| D801 | C-13 |
| D802 | C-13 |
| D803 | C-13 |
| IC701 | B-6 |
| IC702 | B-10 |
| LED761 | C-2 |
| LED762 | B-2 |
| LED763 | A-2 |
| LED764 | A-3 |
| LED765 | B-3 |
| LED766 | C-3 |
| LED773 | B-2 |
| LED774 | B-2 |
| LED800 | A-11 |
| Q710 | F-2 |
| Q711 | F-4 |
| Q712 | F-2 |
| Q713 | F-3 |
| Q714 | F-3 |
| Q800 | C-12 |
| Q801 | C-12 |

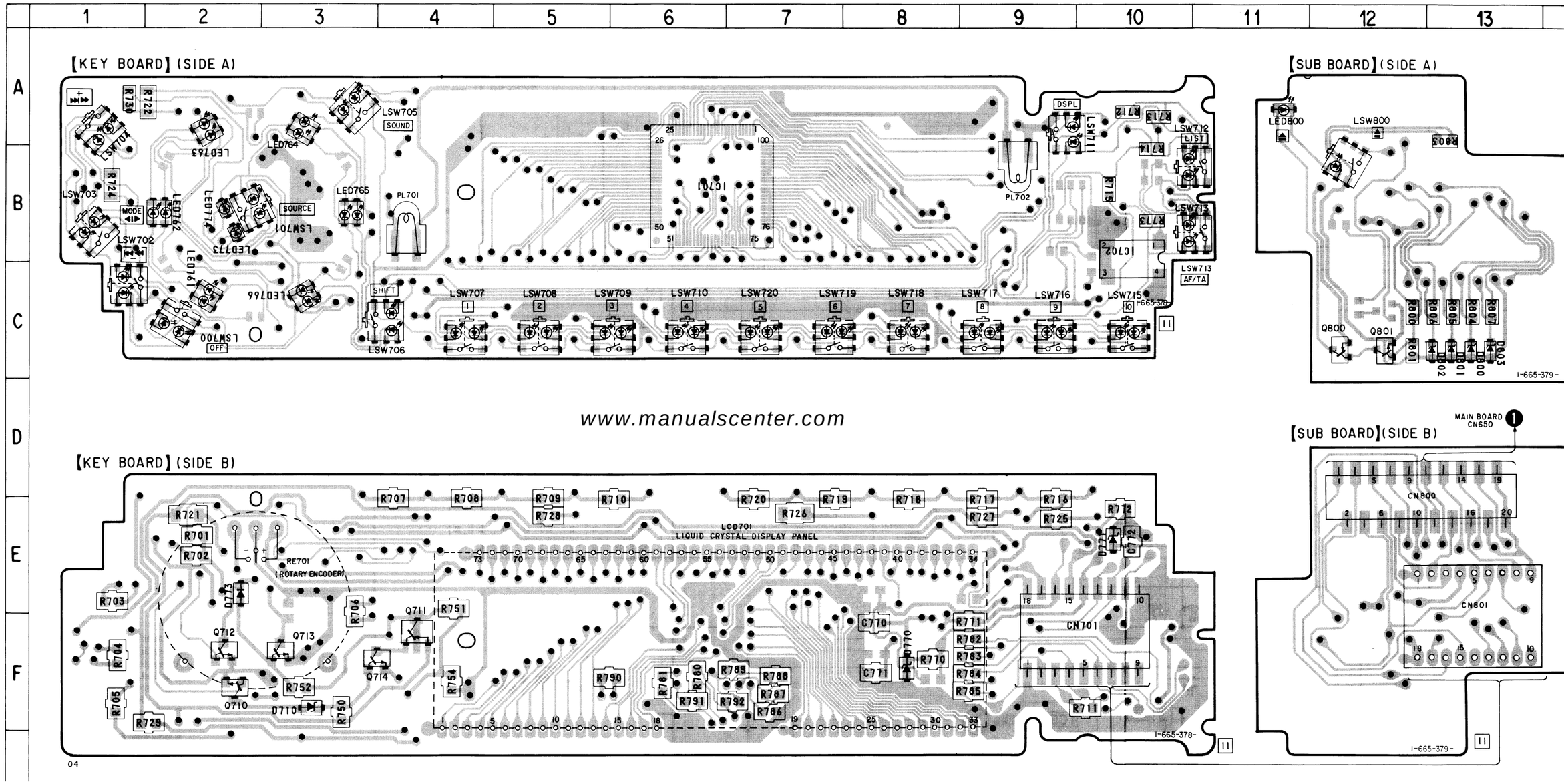


www.manualscenter.com

**Note :**
- ● : Through hole.
- ▒ : Pattern on the side which is seen.
(The other layer's patterns are not indicated.)

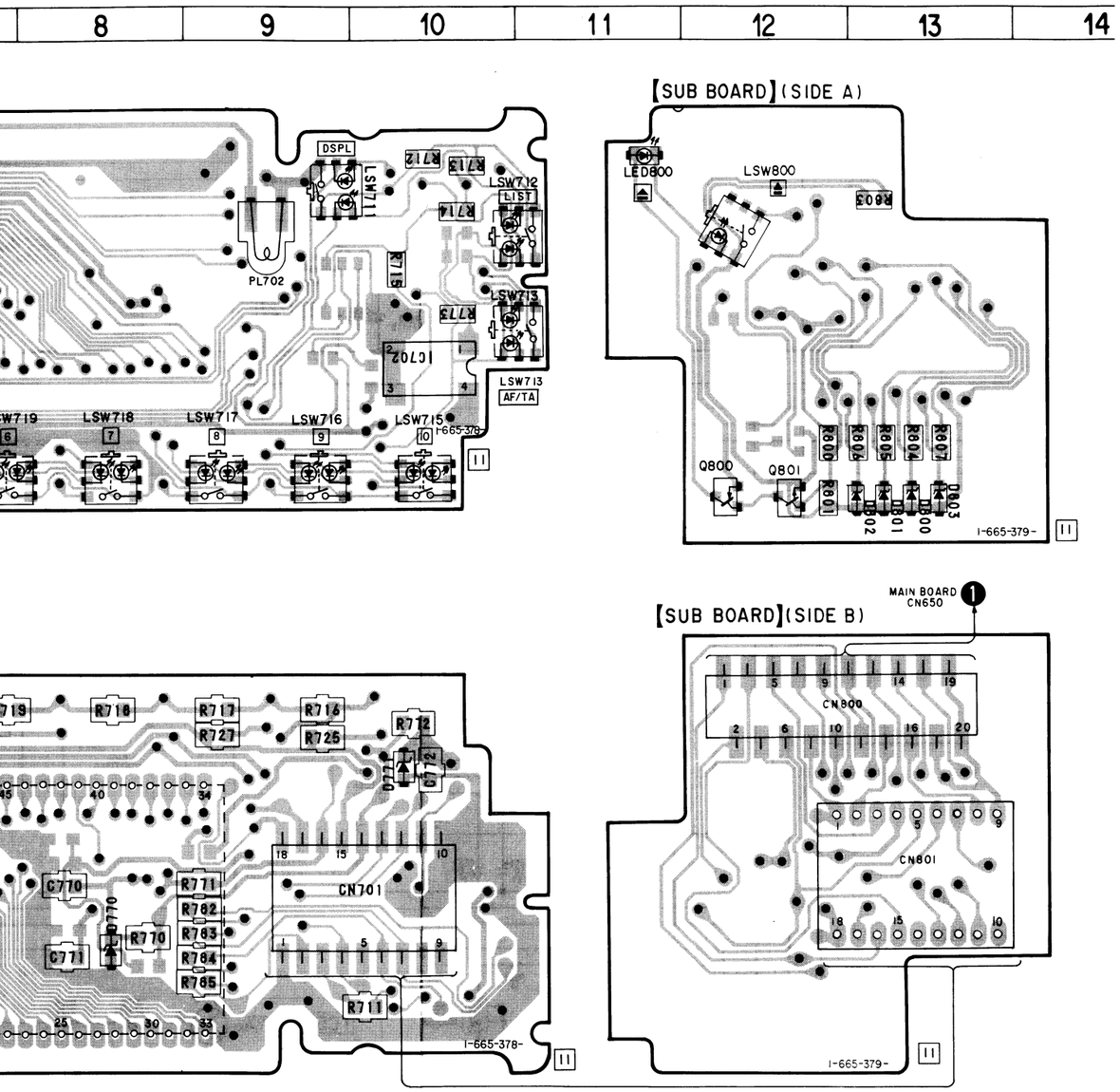


## 6-7. SCHEMATIC DIAGRAM — PANEL SECTION —

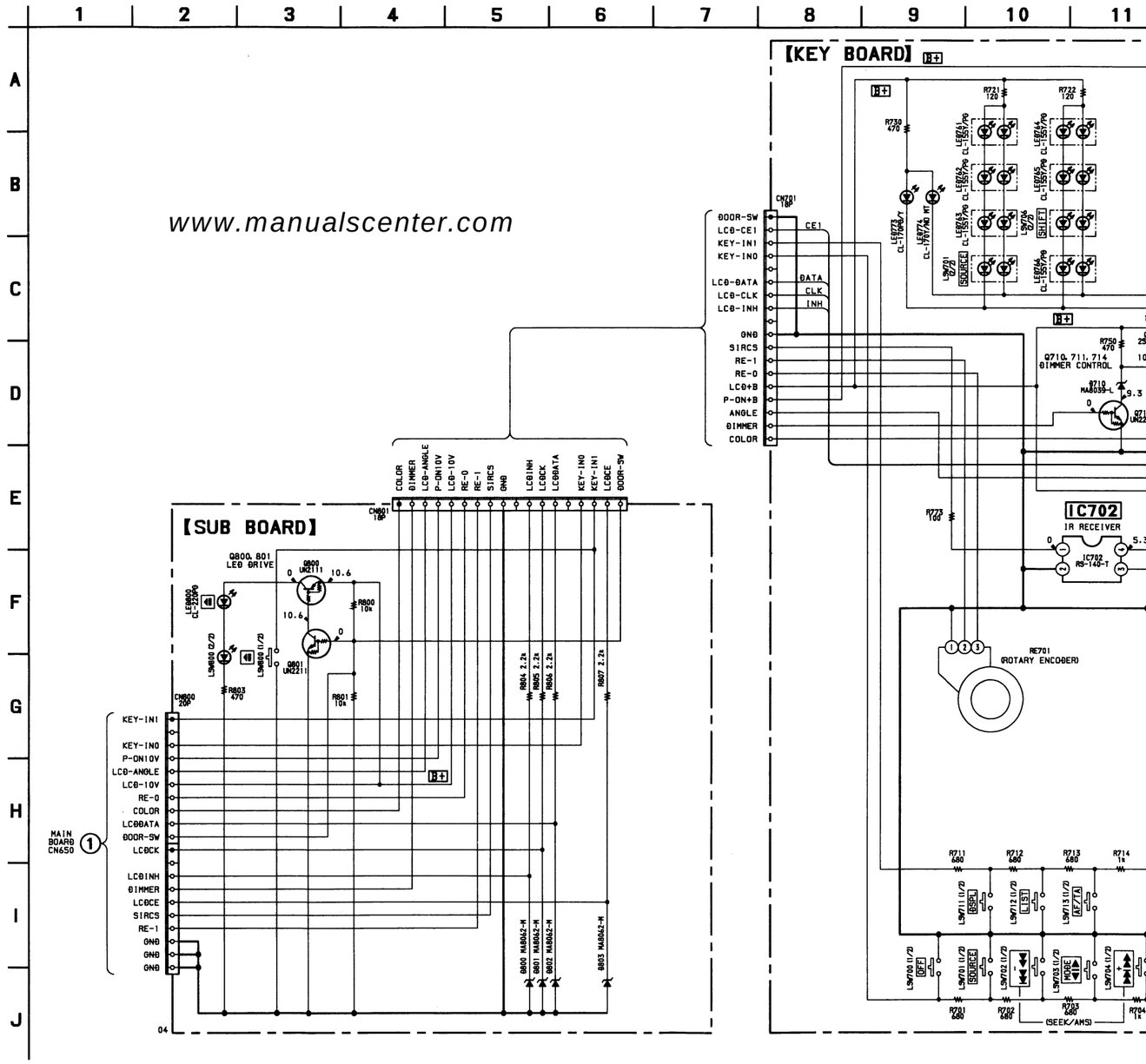


www.manualscenter.com

## TIC DIAGRAM — PANEL SECTION —

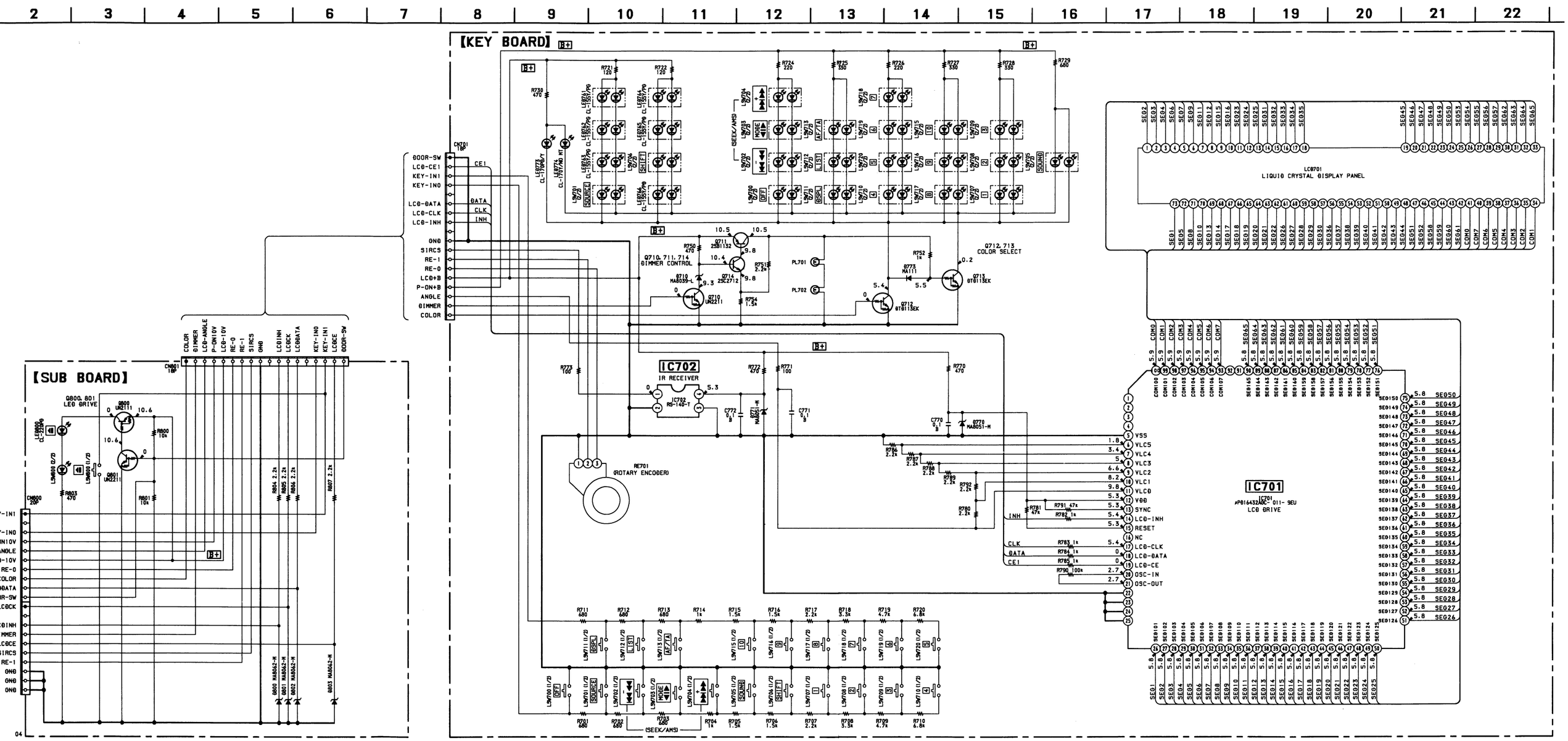


www.manualscenter.com

**Note :**

- All capacitors are in μF unless otherwise noted. pF : μμF 50 WV or less are not indicated except for electrolytics and tantalums.
- All resistors are in Ω and 1/4 W or less unless otherwise specified.
- B+ : B+ Line.
- Power voltage is dc 14.4 V and fed with regulated dc power supply from ACC and BATT terminals.
- Voltage is dc with respect to ground under no-signal (detuned) conditions.
- Voltage are taken with a VOM (Input Impedance 10MΩ). Voltage variations may be noted due to normal production tolerance.

• **IC Block Diagrams**

**IC10 TB2114FN**

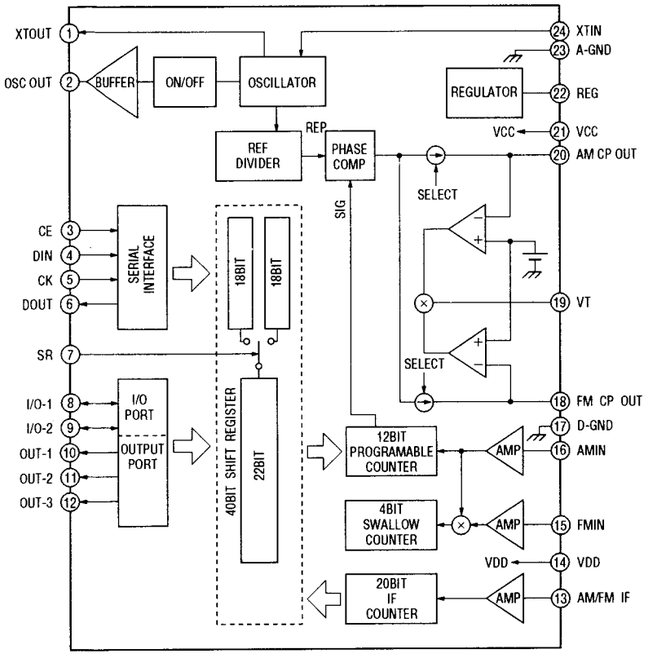


**IC210 CXA2510AQ**

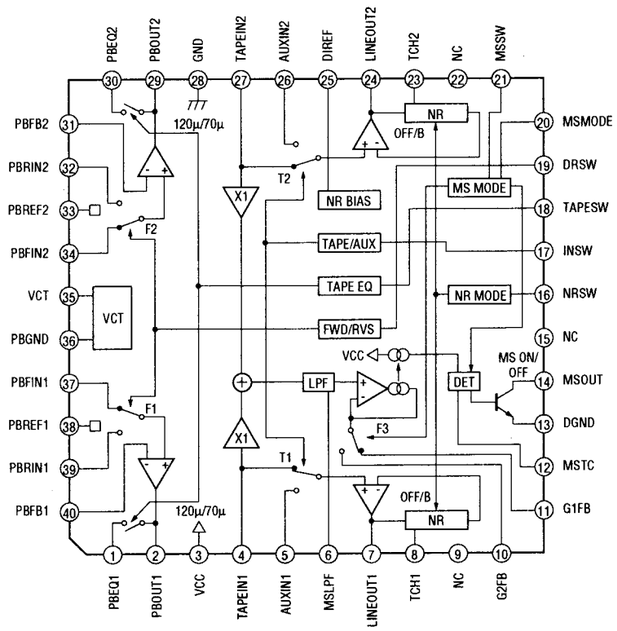


**IC301 CXA1946AQ**

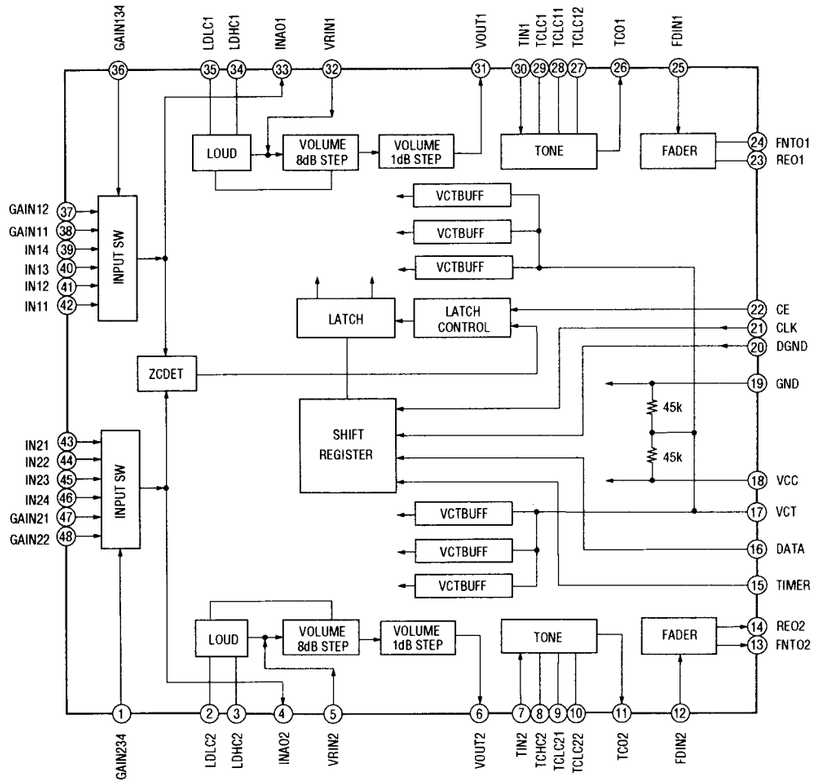


**IC150 SAA6579T**

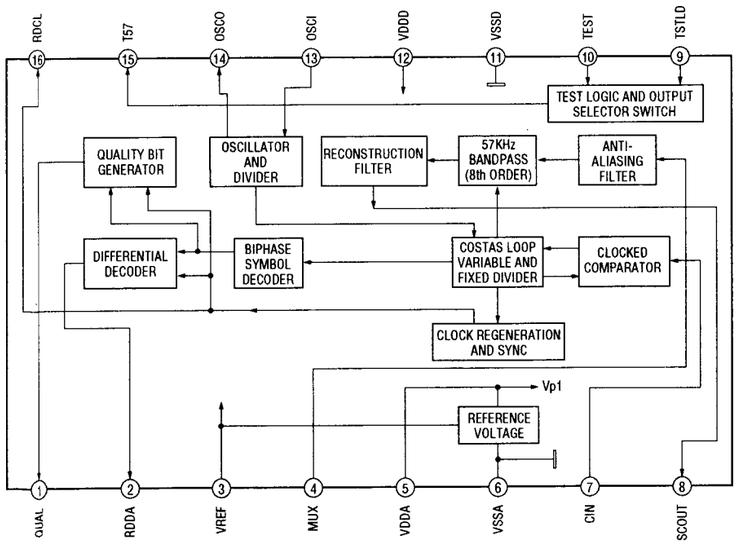


**IC201 LB1638M**

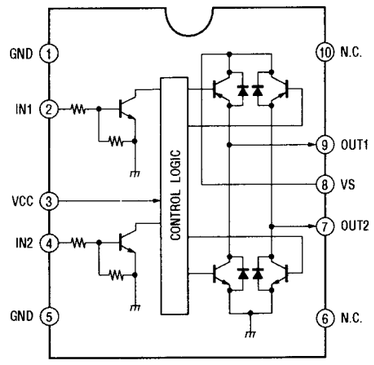


**IC571 BA8270F**

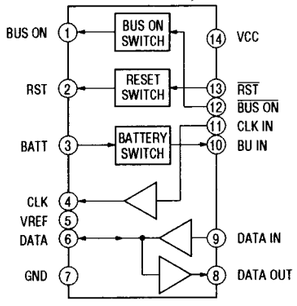


**IC601 BA3918-V3**

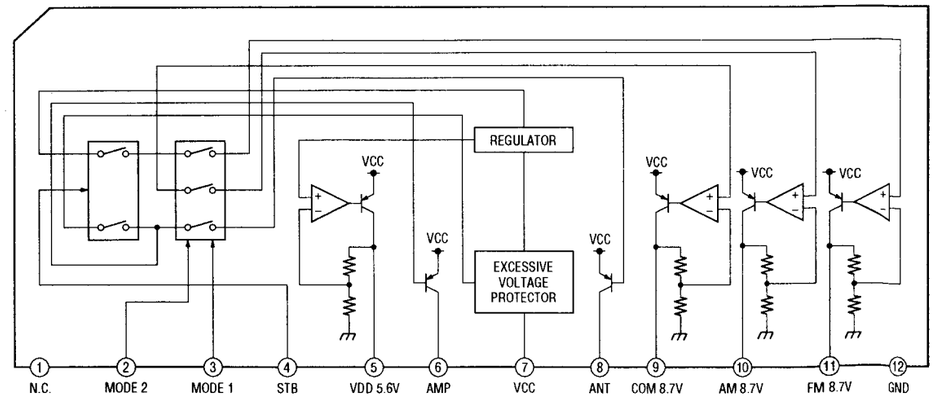


www.manualscenter.com

# SECTION 7
# EXPLODED VIEWS

NOTE:
- The mechanical parts with no reference number in the exploded views are not supplied.
- Items marked "*" are not stocked since they are seldom required for routine service. Some delay should be anticipated when ordering these items.
- Abbreviation
  G : German model
- -XX and -X mean standardized parts, so they may have some difference from the original one.
- Color Indication of Appearance Parts
  Example :
  KNOB, BALANCE (WHITE) ... (RED)
  ↑ Parts Color ↑ Cabinet's Color
- Hardware (# mark) list and accessories and packing materials are given in the last of this parts list.

## 7-1. CHASSIS SECTION

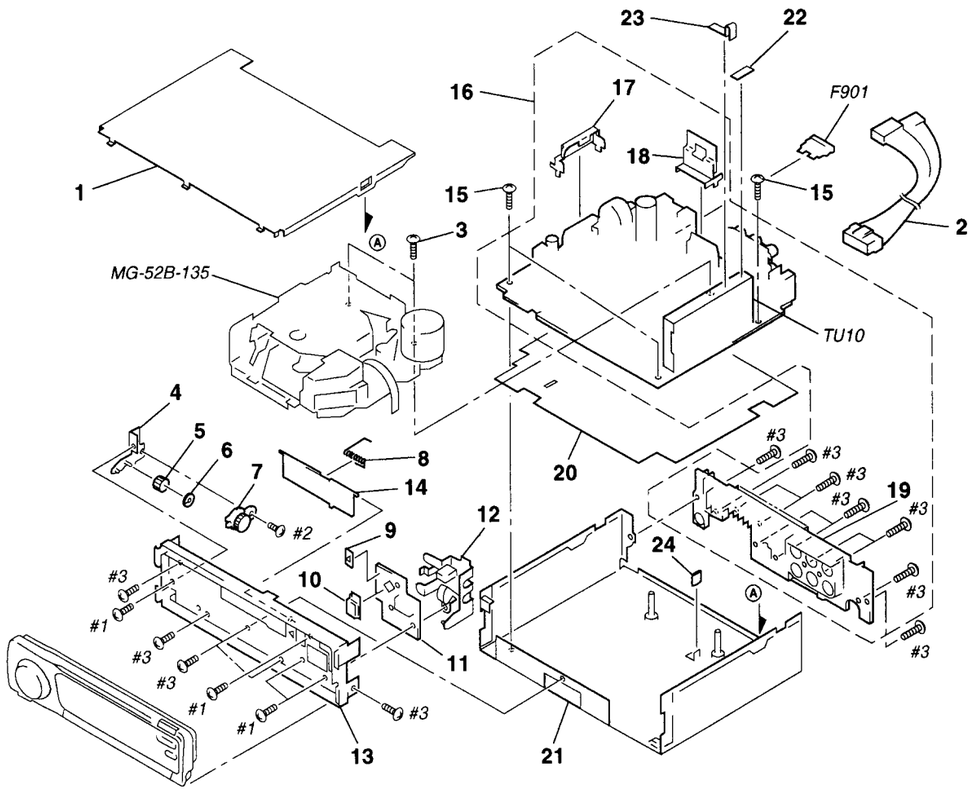


| Ref. No. | Part No. | Description | Remark |
|---|---|---|---|
| * 1 | X-3373-362-1 | COVER ASSY | |
| 2 | 1-776-527-41 | CORD (WITH CONNECTOR) (ISO) (POWER) | |
| 3 | 3-919-171-01 | SCREW (2.6X6) (C TIGHT) | |
| 4 | X-3373-376-1 | BRACKET (GEAR) ASSY | |
| 5 | 3-011-170-01 | GEAR (HOLDER) | |
| 6 | 3-341-752-11 | WASHER, POLYETHYLENE | |
| 7 | 3-953-235-31 | DAMPER, OIL | |
| 8 | 3-913-076-01 | SPRING (C DOOR), TORSION | |
| 9 | 3-010-993-11 | PLATE (C DOOR), LIGHT GUIDE | |
| 10 | 3-010-996-01 | BUTTON (EJECT) | |
| * 11 | 1-665-379-11 | SUB BOARD | |
| 12 | X-3373-831-1 | LOCK ASSY | |
| 13 | X-3373-897-1 | PANEL ASSY, SUB | |
| 14 | 3-922-165-91 | DOOR, CASSETTE | |

| Ref. No. | Part No. | Description | Remark |
|---|---|---|---|
| 15 | 3-915-923-01 | SCREW, GROUND POINT | |
| * 16 | A-3309-968-A | MAIN BOARD, COMPLETE (AEP,UK) | |
| * 16 | A-3309-974-A | MAIN BOARD, COMPLETE (G) | |
| * 17 | 3-011-078-01 | BRACKET (POWER IC) | |
| * 18 | 3-011-090-01 | BRACKET (AMP) | |
| * 19 | 3-011-077-11 | HEAT SINK | |
| * 20 | 3-012-196-01 | INSULATOR | |
| * 21 | X-3373-384-1 | CHASSIS ASSY | |
| 22 | 9-911-840-XX | CUSHION (U) | |
| 23 | 3-355-209-01 | PLATE (B), GROUND | |
| 24 | 3-012-860-01 | CAP (52), RUBBER | |
| F901 | 1-532-877-11 | FUSE (BLADE TYPE) (AUTO FUSE) 10A | |
| TU10 | A-3282-012-A | TUNER UNIT (TUX-006 (E)) | |



## 7-2. FRONT PANEL SECTION

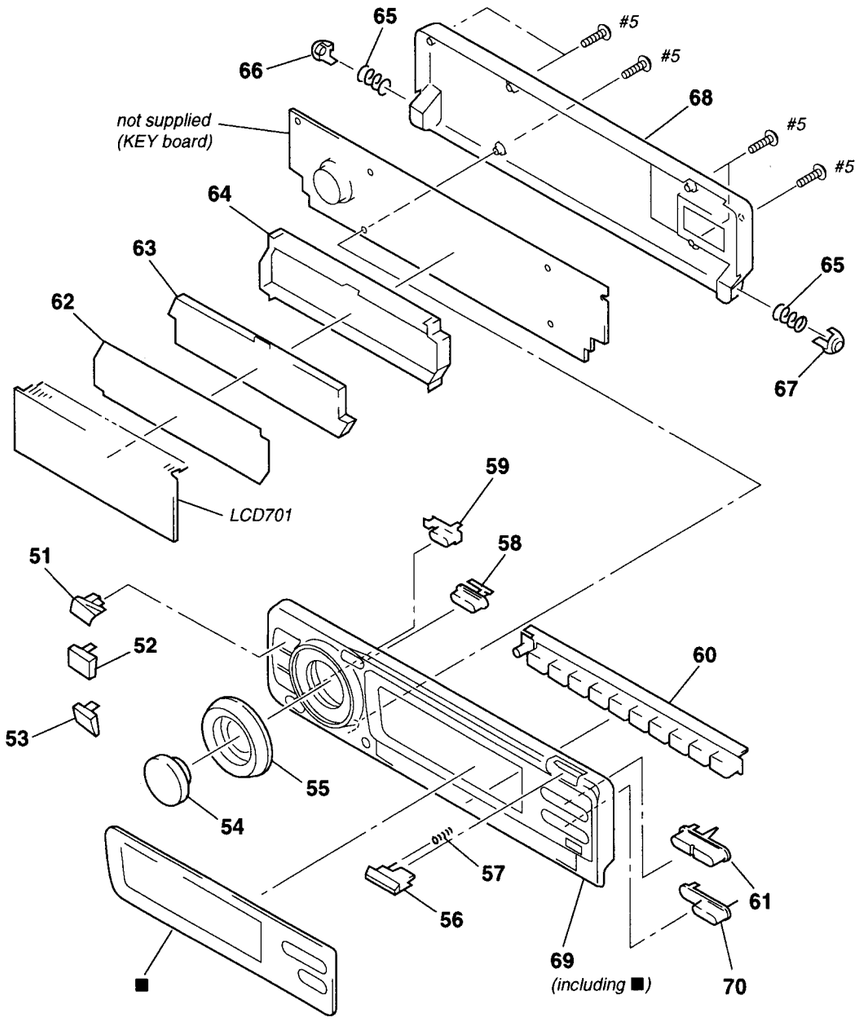


| Ref. No. | Part No. | Description | Remark |
|---|---|---|---|
| 51 | 3-010-985-01 | BUTTON (+) | |
| 52 | 3-010-986-01 | BUTTON (MODE) | |
| 53 | 3-010-987-01 | BUTTON (-) | |
| 54 | X-3373-830-1 | BUTTON (SOURCE) ASSY | |
| 55 | 3-010-989-11 | KNOB (VOL) | |
| 56 | 3-010-983-21 | BUTTON (OPEN) | |
| 57 | 3-010-997-01 | SPRING (OPEN) | |
| 58 | 3-010-982-01 | BUTTON (SOUND) | |
| 59 | 3-010-981-01 | BUTTON (OFF) | |
| 60 | 3-010-980-01 | BUTTON (10 KEY) | |
| 61 | 3-011-459-01 | BUTTON (PTY) | |

| Ref. No. | Part No. | Description | Remark |
|---|---|---|---|
| * 62 | 3-010-995-01 | ILLUMINATOR (LCD) | |
| * 63 | 3-010-991-11 | PLATE (LCD), LIGHT GUIDE | |
| * 64 | 3-010-994-11 | HOLDER (LCD) | |
| 65 | 3-010-998-01 | SPRING (BEARING) | |
| 66 | 3-010-999-11 | BEARING (L) | |
| 67 | 3-011-000-11 | BEARING (R) | |
| 68 | 3-010-977-21 | PANEL, FRONT BACK | |
| 69 | X-3373-708-1 | PANEL SUB ASSY, FRONT | |
| 70 | 3-011-004-01 | BUTTON (AF/TA) | |
| LCD701 | 1-801-679-11 | DISPLAY PANEL, LIQUID CRYSTAL | |

## 7-3. MECHANISM DECK SECTION-1 (MG-52B-135)

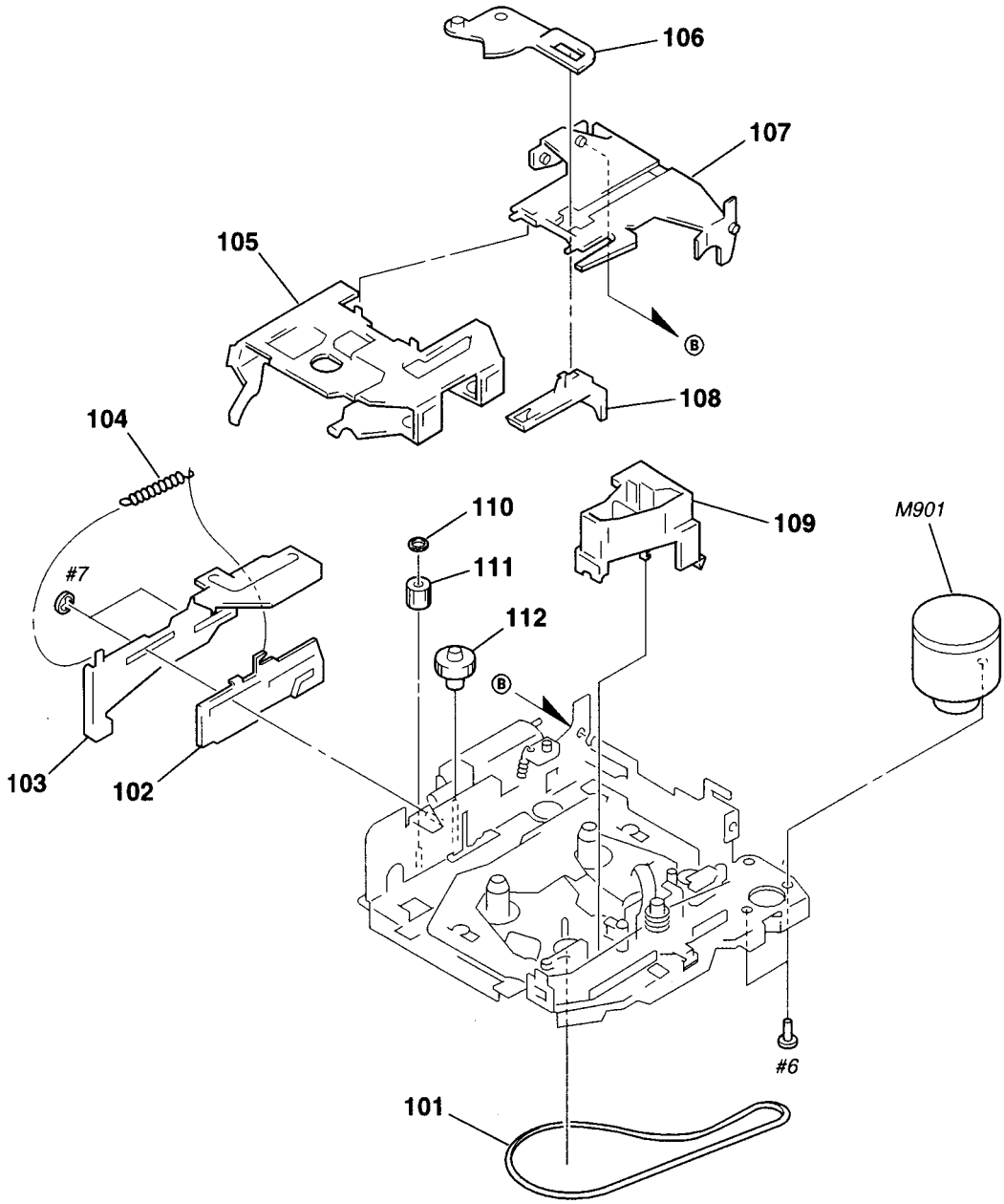


| Ref. No. | Part No. | Description | Remark |
|---|---|---|---|
| 101 | 3-928-675-01 | BELT (52) | |
| * 102 | 3-928-673-01 | LEVER (LDG-A) | |
| 103 | 3-928-674-01 | LEVER (LDG-B) | |
| 104 | 3-933-341-01 | SPRING (LEVER LDG), TENSION | |
| 105 | 3-928-671-01 | HOUSING | |
| * 106 | 3-933-347-01 | ARM (SUCTION) | |
| 107 | 3-933-340-01 | HANGER | |
| 108 | 3-933-346-01 | CATCHER | |
| 109 | 3-933-344-01 | GUIDE (C) | |
| 110 | 3-341-753-11 | WASHER, POLYETHYLENE | |
| 111 | 3-933-335-01 | GEAR (LDG-FT) | |
| 112 | 3-928-667-01 | GEAR (LDG-A) | |
| M901 | A-3291-665-A | MOTOR ASSY, MAIN (CAPSTAN/REEL) | |



www.manualscenter.com

## 7-4. MECHANISM DECK SECTION-2 (MG-52B-135)

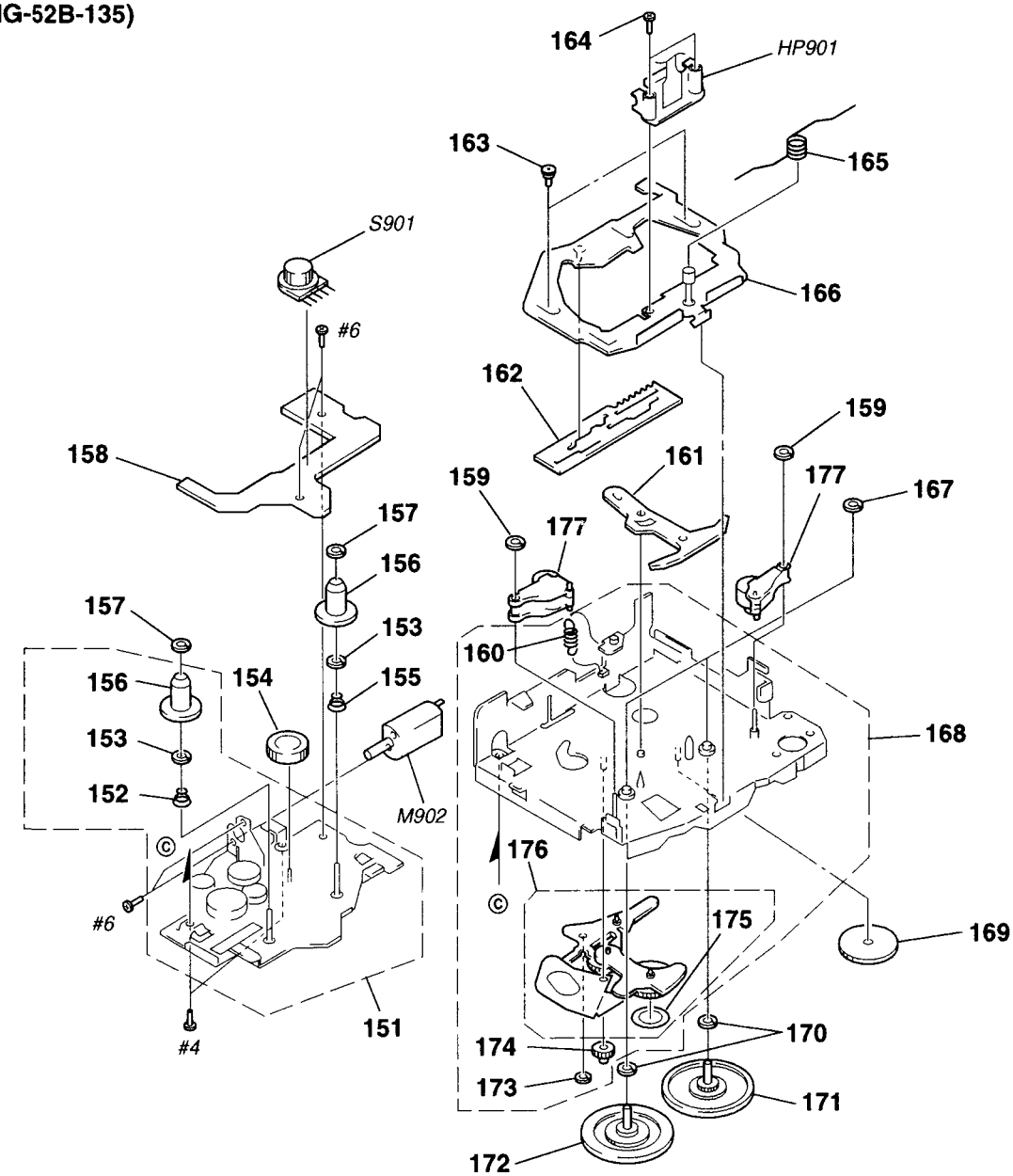


| Ref. No. | Part No. | Description | Remark |
|---|---|---|---|
| 151 | X-3371-710-1 | CHASSIS (S) ASSY | |
| 152 | 3-933-337-01 | SPRING (B-T-R), CONE COIL | |
| 153 | 3-701-437-01 | POLY-SLIDER (A) | |
| 154 | 3-933-333-01 | GEAR (LDG-E) | |
| 155 | 3-933-339-01 | SPRING (B-T-F), CONE COIL | |
| 156 | 3-933-345-01 | GEAR, REEL | |
| 157 | 3-954-807-01 | WASHER | |
| 158 | 1-660-169-11 | REEL BOARD | |
| 159 | 3-341-752-11 | WASHER, POLYETHYLENE | |
| 160 | 3-933-336-01 | SPRING (ARM HANGER), TENSION | |
| 161 | 3-928-669-01 | LEVER (PINCH SELECTION) | |
| 162 | 3-928-668-01 | LEVER (MODE) | |
| 163 | 3-933-338-01 | SCREW (HP), STEP | |
| 164 | 3-927-100-01 | SCREW (+PS 2X10), SPECIAL | |
| 165 | 3-928-670-01 | SPRING (PINCH PRESS) | |

| Ref. No. | Part No. | Description | Remark |
|---|---|---|---|
| * 166 | X-3371-712-1 | PLATE SUB ASSY, HEAD | |
| 167 | 3-364-151-01 | WASHER | |
| * 168 | X-3371-705-1 | CHASSIS (M) ASSY (B) | |
| 169 | X-3371-707-1 | CLUTCH (PLAY) ASSY | |
| 170 | 3-701-437-21 | WASHER | |
| 171 | 3-930-932-01 | FLYWHEEL (F) (SEF) | |
| 172 | A-3291-667-A | CLUTCH (FR) ASSY | |
| 173 | 3-321-813-01 | WASHER, COTTER POLYETHYLENE | |
| 174 | 3-933-343-01 | GEAR (REVERSE) | |
| 175 | 3-933-383-01 | SEAL (32), REFLECTION | |
| 176 | X-3371-703-1 | LEVER (GEAR) ASSY | |
| 177 | X-3371-713-2 | LEVER (PINCH) ASSY | |
| HP901 | 1-500-157-21 | HEAD, MAGNETIC (PLAYBACK) | |
| M902 | A-3291-664-A | MOTOR ASSY, SUB (LOADING/TAPE OPERATION) | |
| S901 | 1-692-885-11 | SWITCH, ROTARY SLIDE (TAPE OPERATION) | |

# SECTION 8
# ELECTRICAL PARTS LIST

**KEY**

NOTE:
- Due to standardization, replacements in the parts list may be different from the parts specified in the diagrams or the components used on the set.
- -XX and -X mean standardized parts, so they may have some difference from the original one.
- RESISTORS
  All resistors are in ohms.
  METAL:Metal-film resistor.
  METAL OXIDE: Metal oxide-film resistor.
  F:nonflammable
- Abbreviation
  G : German model
- Items marked "*" are not stocked since they are seldom required for routine service. Some delay should be anticipated when ordering these items.
- SEMICONDUCTORS
  In each case, u : µ, for example:
  uA.. : µA.. uPA.. : µPA..
  uPB.. : µPB.. uPC.. : µPC.. uPD.. : µPD..
- CAPACITORS
  uF : µF
- COILS
  uH : µH

When indicating parts by reference number, please include the board.

| Ref. No. | Part No. | Description | Remark |
|---|---|---|---|
| | | KEY BOARD<br>********** | |
| * | 3-010-991-11 | PLATE (LCD), LIGHT GUIDE | |
| * | 3-010-994-11 | HOLDER (LCD) | |
| * | 3-010-995-01 | ILLUMINATOR (LCD) | |
| | | < CAPACITOR > | |
| C770 | 1-164-004-11 | CERAMIC CHIP 0.1uF 10% 25V | |
| C771 | 1-164-004-11 | CERAMIC CHIP 0.1uF 10% 25V | |
| C772 | 1-164-004-11 | CERAMIC CHIP 0.1uF 10% 25V | |
| | | < CONNECTOR > | |
| CN701 | 1-778-183-11 | PLUG, CONNECTOR 18P | |
| | | < DIODE > | |
| D710 | 8-719-423-11 | DIODE MA8039-L | |
| D770 | 8-719-420-90 | DIODE MA8051-M | |
| D771 | 8-719-420-90 | DIODE MA8051-M | |
| D773 | 8-719-404-49 | DIODE MA111 | |
| | | < IC > | |
| IC701 | 8-759-331-68 | IC uPD16432AGC-011-9EU | |
| IC702 | 8-749-012-17 | IC RS-140-T | |
| | | < LIQUID CRYSTAL DISPLAY > | |
| LCD701 | 1-801-679-11 | DISPLAY PANEL, LIQUID CRYSTAL | |
| | | < DIODE > | |
| LED761 | 8-719-987-45 | LED CL-155Y/PG-CD | |
| LED762 | 8-719-987-45 | LED CL-155Y/PG-CD | |
| LED763 | 8-719-987-45 | LED CL-155Y/PG-CD | |
| LED764 | 8-719-987-45 | LED CL-155Y/PG-CD | |
| LED765 | 8-719-987-45 | LED CL-155Y/PG-CD | |
| LED766 | 8-719-987-45 | LED CL-155Y/PG-CD | |
| LED773 | 8-719-033-14 | LED CL-170PG-CD-T | |
| LED774 | 8-719-033-13 | LED CL-170Y-CD-T | |

| Ref. No. | Part No. | Description | Remark |
|---|---|---|---|
| | | < SWITCH > | |
| LSW700 | 1-762-620-11 | SWITCH, KEY BOARD (WITH LED) (OFF) | |
| LSW701 | 1-762-620-11 | SWITCH, KEY BOARD (WITH LED) (SOURCE) | |
| LSW702 | 1-762-620-11 | SWITCH, KEY BOARD (WITH LED) (⏮ ◀◀ -(SEEK/AMS)) | |
| LSW703 | 1-762-620-11 | SWITCH, KEY BOARD (WITH LED) (MODE ◀II▶) | |
| LSW704 | 1-762-620-11 | SWITCH, KEY BOARD (WITH LED) (⏭ ▶▶ +(SEEK/AMS)) | |
| LSW705 | 1-762-620-11 | SWITCH, KEY BOARD (WITH LED) (SOUND) | |
| LSW706 | 1-762-620-11 | SWITCH, KEY BOARD (WITH LED) (SHIFT) | |
| LSW707 | 1-762-620-11 | SWITCH, KEY BOARD (WITH LED) (1) | |
| LSW708 | 1-762-620-11 | SWITCH, KEY BOARD (WITH LED) (2) | |
| LSW709 | 1-762-620-11 | SWITCH, KEY BOARD (WITH LED) (3) | |
| LSW710 | 1-762-620-11 | SWITCH, KEY BOARD (WITH LED) (4) | |
| LSW711 | 1-762-620-11 | SWITCH, KEY BOARD (WITH LED) (DSPL) | |
| LSW712 | 1-762-620-11 | SWITCH, KEY BOARD (WITH LED) (LIST) | |
| LSW713 | 1-762-620-11 | SWITCH, KEY BOARD (WITH LED) (AF/TA) | |
| LSW715 | 1-762-620-11 | SWITCH, KEY BOARD (WITH LED) (10) | |
| LSW716 | 1-762-620-11 | SWITCH, KEY BOARD (WITH LED) (9) | |
| LSW717 | 1-762-620-11 | SWITCH, KEY BOARD (WITH LED) (8) | |
| LSW718 | 1-762-620-11 | SWITCH, KEY BOARD (WITH LED) (7) | |
| LSW719 | 1-762-620-11 | SWITCH, KEY BOARD (WITH LED) (6) | |
| LSW720 | 1-762-620-11 | SWITCH, KEY BOARD (WITH LED) (5) | |
| | | < PILOT LAMP > | |
| PL701 | 1-517-630-31 | LAMP, PILOT | |
| PL702 | 1-517-630-31 | LAMP, PILOT | |
| | | < TRANSISTOR > | |
| Q710 | 8-729-421-22 | TRANSISTOR UN2211 | |
| Q711 | 8-729-106-60 | TRANSISTOR 2SB1115A | |
| Q712 | 8-729-904-66 | TRANSISTOR DTD113EK | |
| Q713 | 8-729-904-66 | TRANSISTOR DTD113EK | |
| Q714 | 8-729-230-49 | TRANSISTOR 2SC2712-YG | |
| | | < RESISTOR > | |
| R701 | 1-216-045-00 | METAL CHIP 680 5% 1/10W | |
| R702 | 1-216-045-00 | METAL CHIP 680 5% 1/10W | |
| R703 | 1-216-045-00 | METAL CHIP 680 5% 1/10W | |
| R704 | 1-216-049-11 | METAL GLAZE 1K 5% 1/10W | |



www.manualscenter.com

**KEY** **MAIN**

| Ref. No. | Part No. | Description | | | | Remark |
|---|---|---|---|---|---|---|
| R705 | 1-216-053-00 | METAL CHIP | 1.5K | 5% | 1/10W | |
| R706 | 1-216-053-00 | METAL CHIP | 1.5K | 5% | 1/10W | |
| R707 | 1-216-057-00 | METAL CHIP | 2.2K | 5% | 1/10W | |
| R708 | 1-216-061-00 | METAL CHIP | 3.3K | 5% | 1/10W | |
| R709 | 1-216-065-00 | METAL CHIP | 4.7K | 5% | 1/10W | |
| R710 | 1-216-069-00 | METAL CHIP | 6.8K | 5% | 1/10W | |
| R711 | 1-216-045-00 | METAL CHIP | 680 | 5% | 1/10W | |
| R712 | 1-216-045-00 | METAL CHIP | 680 | 5% | 1/10W | |
| R713 | 1-216-045-00 | METAL CHIP | 680 | 5% | 1/10W | |
| R714 | 1-216-049-11 | METAL GLAZE | 1K | 5% | 1/10W | |
| R715 | 1-216-053-00 | METAL CHIP | 1.5K | 5% | 1/10W | |
| R716 | 1-216-053-00 | METAL CHIP | 1.5K | 5% | 1/10W | |
| R717 | 1-216-057-00 | METAL CHIP | 2.2K | 5% | 1/10W | |
| R718 | 1-216-061-00 | METAL CHIP | 3.3K | 5% | 1/10W | |
| R719 | 1-216-065-00 | METAL CHIP | 4.7K | 5% | 1/10W | |
| R720 | 1-216-069-00 | METAL CHIP | 6.8K | 5% | 1/10W | |
| R721 | 1-216-176-11 | METAL CHIP | 120 | 5% | 1/8W | |
| R722 | 1-216-176-11 | METAL CHIP | 120 | 5% | 1/8W | |
| R724 | 1-216-182-00 | METAL GLAZE | 220 | 5% | 1/8W | |
| R725 | 1-216-037-00 | METAL CHIP | 330 | 5% | 1/10W | |
| R726 | 1-216-182-00 | METAL GLAZE | 220 | 5% | 1/8W | |
| R727 | 1-216-037-00 | METAL CHIP | 330 | 5% | 1/10W | |
| R728 | 1-216-037-00 | METAL CHIP | 330 | 5% | 1/10W | |
| R729 | 1-216-045-00 | METAL CHIP | 680 | 5% | 1/10W | |
| R730 | 1-216-041-00 | METAL CHIP | 470 | 5% | 1/10W | |
| R750 | 1-216-041-00 | METAL CHIP | 470 | 5% | 1/10W | |
| R751 | 1-216-057-00 | METAL CHIP | 2.2K | 5% | 1/10W | |
| R752 | 1-216-049-11 | METAL GLAZE | 1K | 5% | 1/10W | |
| R754 | 1-216-053-00 | METAL CHIP | 1.5K | 5% | 1/10W | |
| R770 | 1-216-041-00 | METAL CHIP | 470 | 5% | 1/10W | |
| R771 | 1-216-025-00 | METAL GLAZE | 100 | 5% | 1/10W | |
| R772 | 1-216-041-00 | METAL CHIP | 470 | 5% | 1/10W | |
| R773 | 1-216-025-00 | METAL GLAZE | 100 | 5% | 1/10W | |
| R780 | 1-216-057-00 | METAL CHIP | 2.2K | 5% | 1/10W | |
| R781 | 1-216-089-00 | METAL GLAZE | 47K | 5% | 1/10W | |
| R782 | 1-216-049-11 | METAL GLAZE | 1K | 5% | 1/10W | |
| R783 | 1-216-049-11 | METAL GLAZE | 1K | 5% | 1/10W | |
| R784 | 1-216-049-11 | METAL GLAZE | 1K | 5% | 1/10W | |
| R785 | 1-216-049-11 | METAL GLAZE | 1K | 5% | 1/10W | |
| R786 | 1-216-057-00 | METAL CHIP | 2.2K | 5% | 1/10W | |
| R787 | 1-216-057-00 | METAL CHIP | 2.2K | 5% | 1/10W | |
| R788 | 1-216-057-00 | METAL CHIP | 2.2K | 5% | 1/10W | |
| R789 | 1-216-057-00 | METAL CHIP | 2.2K | 5% | 1/10W | |
| R790 | 1-216-097-00 | METAL GLAZE | 100K | 5% | 1/10W | |
| R791 | 1-216-089-00 | METAL GLAZE | 47K | 5% | 1/10W | |
| R792 | 1-216-057-00 | METAL CHIP | 2.2K | 5% | 1/10W | |

| Ref. No. | Part No. | Description | | | | Remark |
|---|---|---|---|---|---|---|
| | | < ROTARY ENCODER > | | | | |
| RE701 | 1-475-014-11 | ENCODER, ROTARY | | | | |
| ********** | | | | | | |
| * | A-3309-968-A | MAIN BOARD, COMPLETE (AEP,UK) | | | | |
| * | A-3309-974-A | MAIN BOARD, COMPLETE (G) | | | | |
| | | ********** | | | | |
| * | 3-011-077-11 | HEAT SINK | | | | |
| * | 3-011-078-01 | BRACKET (POWER IC) | | | | |
| * | 3-011-090-01 | BRACKET (AMP) | | | | |
| | 7-685-793-09 | SCREW +PTT 2.6X8 (S) | | | | |
| | | < BUZZER > | | | | |
| BZ501 | 1-504-920-11 | BUZZER | | | | |
| | | < CAPACITOR > | | | | |
| C1 | 1-163-031-11 | CERAMIC CHIP | 0.01uF | | 50V | |
| C9 | 1-164-161-11 | CERAMIC CHIP | 0.0022uF | 10% | 100V | |
| C10 | 1-163-235-11 | CERAMIC CHIP | 22PF | 5% | 50V | |
| C11 | 1-126-933-11 | ELECT | 100uF | 20% | 16V | |
| C12 | 1-104-760-11 | CERAMIC CHIP | 0.047uF | 10% | 50V | |
| C13 | 1-126-933-11 | ELECT | 100uF | 20% | 16V | |
| C14 | 1-163-031-11 | CERAMIC CHIP | 0.01uF | | 50V | |
| C15 | 1-126-933-11 | ELECT | 100uF | 20% | 16V | |
| C16 | 1-104-760-11 | CERAMIC CHIP | 0.047uF | 10% | 50V | |
| C17 | 1-163-253-11 | CERAMIC CHIP | 120PF | 5% | 50V | |
| C18 | 1-136-157-00 | FILM | 0.022uF | 5% | 50V | |
| C19 | 1-124-465-00 | ELECT | 0.47uF | 20% | 50V | |
| C20 | 1-137-366-11 | FILM | 0.0022uF | 5% | 50V | |
| C21 | 1-137-358-11 | FILM | 0.0001uF | 5% | 50V | |
| C22 | 1-163-251-11 | CERAMIC CHIP | 100PF | 5% | 50V | |
| C23 | 1-163-031-11 | CERAMIC CHIP | 0.01uF | | 50V | |
| C24 | 1-163-251-11 | CERAMIC CHIP | 100PF | 5% | 50V | |
| C25 | 1-163-251-11 | CERAMIC CHIP | 100PF | 5% | 50V | |
| C27 | 1-126-157-11 | ELECT | 10uF | 20% | 16V | |
| C28 | 1-104-760-11 | CERAMIC CHIP | 0.047uF | 10% | 50V | |
| C29 | 1-104-760-11 | CERAMIC CHIP | 0.047uF | 10% | 50V | |
| C30 | 1-163-031-11 | CERAMIC CHIP | 0.01uF | | 50V | |
| C31 | 1-163-237-11 | CERAMIC CHIP | 27PF | 5% | 50V | |
| C32 | 1-163-237-11 | CERAMIC CHIP | 27PF | 5% | 50V | |
| C33 | 1-124-234-00 | ELECT | 22uF | 20% | 16V | |
| C34 | 1-163-031-11 | CERAMIC CHIP | 0.01uF | | 50V | |
| C35 | 1-124-234-00 | ELECT | 22uF | 20% | 16V | |
| C36 | 1-163-031-11 | CERAMIC CHIP | 0.01uF | | 50V | |
| C70 | 1-104-760-11 | CERAMIC CHIP | 0.047uF | 10% | 50V | |
| C71 | 1-165-319-11 | CERAMIC CHIP | 0.1uF | | 50V | |
| C72 | 1-107-823-11 | CERAMIC CHIP | 0.47uF | 10% | 16V | |
| C80 | 1-136-155-00 | FILM | 0.015uF | 5% | 50V | |

## MAIN

| Ref. No. | Part No. | Description | | | Remark |
|---|---|---|---|---|---|
| C503 | 1-163-099-00 | CERAMIC CHIP | 18PF | 5% | 50V |
| C504 | 1-163-099-00 | CERAMIC CHIP | 18PF | 5% | 50V |
| C551 | 1-165-319-11 | CERAMIC CHIP | 0.1uF | | 50V |
| C552 | 1-126-924-11 | ELECT | 330uF | 20% | 10V |
| C553 | 1-125-701-11 | DOUBLE LAYERS | 0.047F | | 5.5V |
| C554 | 1-163-031-11 | CERAMIC CHIP | 0.01uF | | 50V |
| C572 | 1-163-031-11 | CERAMIC CHIP | 0.01uF | | 50V |
| C601 | 1-126-157-11 | ELECT | 10uF | 20% | 16V |
| C602 | 1-126-157-11 | ELECT | 10uF | 20% | 16V |
| C603 | 1-163-031-11 | CERAMIC CHIP | 0.01uF | | 50V |
| C604 | 1-124-234-00 | ELECT | 22uF | 20% | 16V |
| C605 | 1-163-031-11 | CERAMIC CHIP | 0.01uF | | 50V |
| C606 | 1-124-234-00 | ELECT | 22uF | 20% | 16V |
| C607 | 1-126-157-11 | ELECT | 10uF | 20% | 16V |
| C608 | 1-126-157-11 | ELECT | 10uF | 20% | 16V |
| C630 | 1-126-163-11 | ELECT | 4.7uF | 20% | 50V |
| C640 | 1-126-163-11 | ELECT | 4.7uF | 20% | 50V |
| C650 | 1-163-037-11 | CERAMIC CHIP | 0.022uF | 10% | 25V |
| C651 | 1-163-037-11 | CERAMIC CHIP | 0.022uF | 10% | 25V |
| C672 | 1-165-319-11 | CERAMIC CHIP | 0.1uF | | 50V |
| C673 | 1-165-319-11 | CERAMIC CHIP | 0.1uF | | 50V |
| C682 | 1-163-031-11 | CERAMIC CHIP | 0.01uF | | 50V |
| C683 | 1-163-031-11 | CERAMIC CHIP | 0.01uF | | 50V |
| C701 | 1-136-165-00 | FILM | 0.1uF | 5% | 50V |
| C702 | 1-136-165-00 | FILM | 0.1uF | 5% | 50V |
| C703 | 1-136-165-00 | FILM | 0.1uF | 5% | 50V |
| C704 | 1-136-165-00 | FILM | 0.1uF | 5% | 50V |
| C705 | 1-136-165-00 | FILM | 0.1uF | 5% | 50V |
| C706 | 1-136-165-00 | FILM | 0.1uF | 5% | 50V |
| C707 | 1-136-165-00 | FILM | 0.1uF | 5% | 50V |
| C708 | 1-136-165-00 | FILM | 0.1uF | 5% | 50V |
| C710 | 1-164-506-11 | CERAMIC CHIP | 4.7uF | | 16V |
| C711 | 1-126-933-11 | ELECT | 100uF | 20% | 16V |
| C713 | 1-136-173-00 | FILM | 0.47uF | 5% | 50V |
| C714 | 1-126-160-11 | ELECT | 1uF | 20% | 50V |
| C715 | 1-126-157-11 | ELECT | 10uF | 20% | 16V |
| C717 | 1-104-665-11 | ELECT | 100uF | 20% | 25V |
| C718 | 1-124-257-00 | ELECT | 2.2uF | 20% | 50V |
| C731 | 1-126-157-11 | ELECT | 10uF | 20% | 16V |
| C732 | 1-164-182-11 | CERAMIC CHIP | 0.0033uF | 10% | 50V |
| C741 | 1-126-157-11 | ELECT | 10uF | 20% | 16V |
| C751 | 1-126-157-11 | ELECT | 10uF | 20% | 16V |
| C761 | 1-126-157-11 | ELECT | 10uF | 20% | 16V |
| C901 | 1-111-233-11 | ELECT | 5600uF | 20% | 16V |
| C902 | 1-136-165-00 | FILM | 0.1uF | 5% | 50V |
| C911 | 1-163-251-11 | CERAMIC CHIP | 100PF | 5% | 50V |
| C912 | 1-163-251-11 | CERAMIC CHIP | 100PF | 5% | 50V |
| C913 | 1-163-251-11 | CERAMIC CHIP | 100PF | 5% | 50V |
| C914 | 1-163-251-11 | CERAMIC CHIP | 100PF | 5% | 50V |
| C915 | 1-163-251-11 | CERAMIC CHIP | 100PF | 5% | 50V |
| C916 | 1-124-589-11 | ELECT | 47uF | 20% | 16V |
| C917 | 1-126-163-11 | ELECT | 4.7uF | 20% | 50V |
| C931 | 1-163-251-11 | CERAMIC CHIP | 100PF | 5% | 50V |
| C932 | 1-163-251-11 | CERAMIC CHIP | 100PF | 5% | 50V |
| C941 | 1-163-251-11 | CERAMIC CHIP | 100PF | 5% | 50V |
| C942 | 1-163-251-11 | CERAMIC CHIP | 100PF | 5% | 50V |
| | | < CONNECTOR > | | | |
| CN210 | 1-766-260-11 | CONNECTOR, FFC/FPC (ZIF) 7P | | | |
| * CN211 | 1-506-995-11 | PIN, CONNECTOR (PC BOARD) 13P | | | |
| CN571 | 1-580-907-31 | PLUG, CONNECTOR 8P (BUS CONTROL IN) | | | |
| CN650 | 1-770-411-11 | CONNECTOR, BOARD TO BOARD 20P | | | |
| CN900 | 1-774-701-11 | PIN, CONNECTOR 16P | | | |
| | | < JACK > | | | |
| CN901 | 1-774-700-11 | JACK, PIN 6P (BUS AUDIO IN, REAR/FRONT LINE OUT) | | | |
| | | < DISCHARGE GAP > | | | |
| CP10 | 1-519-504-11 | GAP, DISCHARGE | | | |
| | | < DIODE > | | | |
| D10 | 8-719-040-04 | DIODE MA721WK-(TX) | | | |
| D11 | 8-719-977-02 | DIODE DTZ-TT11-5.6A | | | |
| D12 | 8-719-977-25 | DIODE DTZ9.1C | | | |
| D85 | 8-719-976-87 | DIODE DTZ3.9A | | | |
| D110 | 8-719-988-62 | DIODE 1SS355 | | | |
| D111 | 8-719-988-62 | DIODE 1SS355 | | | |
| D201 | 8-719-988-62 | DIODE 1SS355 | | | |
| D202 | 8-719-977-25 | DIODE DTZ9.1C | | | |
| D251 | 8-719-988-62 | DIODE 1SS355 | | | |
| D252 | 8-719-976-87 | DIODE DTZ3.9A | | | |
| D501 | 8-719-914-44 | DIODE DAP202K | | | |
| D551 | 8-719-040-04 | DIODE MA721WK-(TX) | | | |
| D552 | 8-719-988-62 | DIODE 1SS355 | | | |
| D553 | 8-719-105-99 | DIODE RD6.2M-B1 | | | |
| D560 | 8-719-105-99 | DIODE RD6.2M-B1 | | | |
| D571 | 8-719-056-83 | DIODE UDZ-TE-17-6.8B | | | |
| D572 | 8-719-105-99 | DIODE RD6.2M-B1 | | | |
| D573 | 8-719-105-99 | DIODE RD6.2M-B1 | | | |
| D574 | 8-719-105-99 | DIODE RD6.2M-B1 | | | |
| D575 | 8-719-978-69 | DIODE DTZ-TT11-16B | | | |
| D576 | 8-719-988-62 | DIODE 1SS355 | | | |
| D577 | 8-719-988-62 | DIODE 1SS355 | | | |
| D578 | 8-719-988-62 | DIODE 1SS355 | | | |
| D630 | 8-719-914-43 | DIODE DAN202K | | | |
| D631 | 8-719-056-83 | DIODE UDZ-TE-17-6.8B | | | |



www.manualscenter.com

| Ref. No. | Part No. | Description | | | Remark |
|---|---|---|---|---|---|
| C81 | 1-126-163-11 | ELECT | 4.7uF | 20% | 50V |
| C82 | 1-126-160-11 | ELECT | 1uF | 20% | 50V |
| C83 | 1-163-275-11 | CERAMIC CHIP | 0.001uF | 5% | 50V |
| C84 | 1-163-275-11 | CERAMIC CHIP | 0.001uF | 5% | 50V |
| C85 | 1-163-031-11 | CERAMIC CHIP | 0.01uF | | 50V |
| C86 | 1-124-257-00 | ELECT | 2.2uF | 20% | 50V |
| C88 | 1-126-157-11 | ELECT | 10uF | 20% | 16V |
| C90 | 1-136-155-00 | FILM | 0.015uF | 5% | 50V |
| C91 | 1-126-163-11 | ELECT | 4.7uF | 20% | 50V |
| C92 | 1-126-160-11 | ELECT | 1uF | 20% | 50V |
| C93 | 1-163-275-11 | CERAMIC CHIP | 0.001uF | 5% | 50V |
| C94 | 1-163-275-11 | CERAMIC CHIP | 0.001uF | 5% | 50V |
| C96 | 1-124-257-00 | ELECT | 2.2uF | 20% | 50V |
| C97 | 1-124-234-00 | ELECT | 22uF | 20% | 16V |
| C98 | 1-163-031-11 | CERAMIC CHIP | 0.01uF | | 50V |
| C101 | 1-126-157-11 | ELECT | 10uF | 20% | 16V |
| C102 | 1-163-031-11 | CERAMIC CHIP | 0.01uF | | 50V |
| C103 | 1-165-319-11 | CERAMIC CHIP | 0.1uF | | 50V |
| C120 | 1-126-157-11 | ELECT | 10uF | 20% | 16V |
| C150 | 1-163-245-11 | CERAMIC CHIP | 56PF | 5% | 50V |
| C151 | 1-163-245-11 | CERAMIC CHIP | 56PF | 5% | 50V |
| C152 | 1-163-135-00 | CERAMIC CHIP | 560PF | 5% | 50V |
| C153 | 1-163-127-00 | CERAMIC CHIP | 270PF | 5% | 50V |
| C154 | 1-126-157-11 | ELECT | 10uF | 20% | 16V |
| C155 | 1-165-319-11 | CERAMIC CHIP | 0.1uF | | 50V |
| C156 | 1-165-319-11 | CERAMIC CHIP | 0.1uF | | 50V |
| C157 | 1-124-257-00 | ELECT | 2.2uF | 20% | 50V |
| C201 | 1-126-935-11 | ELECT | 470uF | 20% | 16V |
| C202 | 1-163-031-11 | CERAMIC CHIP | 0.01uF | | 50V |
| C203 | 1-126-157-11 | ELECT | 10uF | 20% | 16V |
| C204 | 1-163-031-11 | CERAMIC CHIP | 0.01uF | | 50V |
| C205 | 1-163-009-11 | CERAMIC CHIP | 0.001uF | 10% | 50V |
| C206 | 1-163-009-11 | CERAMIC CHIP | 0.001uF | 10% | 50V |
| C207 | 1-164-222-11 | CERAMIC CHIP | 0.22uF | | 25V |
| C211 | 1-124-589-11 | ELECT | 47uF | 20% | 16V |
| C212 | 1-163-031-11 | CERAMIC CHIP | 0.01uF | | 50V |
| C213 | 1-124-234-00 | ELECT | 22uF | 20% | 16V |
| C214 | 1-163-031-11 | CERAMIC CHIP | 0.01uF | | 50V |
| C230 | 1-163-263-11 | CERAMIC CHIP | 330PF | 5% | 50V |
| C231 | 1-163-263-11 | CERAMIC CHIP | 330PF | 5% | 50V |
| C235 | 1-164-232-11 | CERAMIC CHIP | 0.01uF | | 50V |
| C236 | 1-124-465-00 | ELECT | 0.47uF | 20% | 50V |
| C237 | 1-164-004-11 | CERAMIC CHIP | 0.1uF | 10% | 25V |
| C238 | 1-126-163-11 | ELECT | 4.7uF | 20% | 50V |
| C239 | 1-124-257-00 | ELECT | 2.2uF | 20% | 50V |
| C240 | 1-163-263-11 | CERAMIC CHIP | 330PF | 5% | 50V |
| C241 | 1-163-263-11 | CERAMIC CHIP | 330PF | 5% | 50V |
| C245 | 1-164-232-11 | CERAMIC CHIP | 0.01uF | | 50V |
| C246 | 1-124-465-00 | ELECT | 0.47uF | 20% | 50V |

| Ref. No. | Part No. | Description | | | Remark |
|---|---|---|---|---|---|
| C247 | 1-164-004-11 | CERAMIC CHIP | 0.1uF | 10% | 25V |
| C248 | 1-126-163-11 | ELECT | 4.7uF | 20% | 50V |
| C249 | 1-124-257-00 | ELECT | 2.2uF | 20% | 50V |
| C250 | 1-163-031-11 | CERAMIC CHIP | 0.01uF | | 50V |
| C251 | 1-107-823-11 | CERAMIC CHIP | 0.47uF | 10% | 16V |
| C252 | 1-104-760-11 | CERAMIC CHIP | 0.047uF | 10% | 50V |
| C253 | 1-163-037-11 | CERAMIC CHIP | 0.022uF | 10% | 25V |
| C255 | 1-163-009-11 | CERAMIC CHIP | 0.001uF | 10% | 50V |
| C271 | 1-163-251-11 | CERAMIC CHIP | 100PF | 5% | 50V |
| C272 | 1-163-251-11 | CERAMIC CHIP | 100PF | 5% | 50V |
| C273 | 1-163-251-11 | CERAMIC CHIP | 100PF | 5% | 50V |
| C281 | 1-163-251-11 | CERAMIC CHIP | 100PF | 5% | 50V |
| C282 | 1-163-251-11 | CERAMIC CHIP | 100PF | 5% | 50V |
| C283 | 1-163-251-11 | CERAMIC CHIP | 100PF | 5% | 50V |
| C300 | 1-124-257-00 | ELECT | 2.2uF | 20% | 50V |
| C301 | 1-136-165-00 | FILM | 0.1uF | 5% | 50V |
| C302 | 1-137-366-11 | FILM | 0.0022uF | 5% | 50V |
| C303 | 1-126-157-11 | ELECT | 10uF | 20% | 16V |
| C304 | 1-137-366-11 | FILM | 0.0022uF | 5% | 50V |
| C305 | 1-126-157-11 | ELECT | 10uF | 20% | 16V |
| C306 | 1-124-465-00 | ELECT | 0.47uF | 20% | 50V |
| C321 | 1-124-584-00 | ELECT | 100uF | 20% | 10V |
| C322 | 1-163-031-11 | CERAMIC CHIP | 0.01uF | | 50V |
| C323 | 1-124-234-00 | ELECT | 22uF | 20% | 16V |
| C324 | 1-163-031-11 | CERAMIC CHIP | 0.01uF | | 50V |
| C325 | 1-124-584-00 | ELECT | 100uF | 20% | 10V |
| C326 | 1-163-031-11 | CERAMIC CHIP | 0.01uF | | 50V |
| C327 | 1-124-584-00 | ELECT | 100uF | 20% | 10V |
| C328 | 1-163-031-11 | CERAMIC CHIP | 0.01uF | | 50V |
| C331 | 1-126-163-11 | ELECT | 4.7uF | 20% | 50V |
| C332 | 1-163-251-11 | CERAMIC CHIP | 100PF | 5% | 50V |
| C333 | 1-124-584-00 | ELECT | 100uF | 20% | 10V |
| C334 | 1-163-031-11 | CERAMIC CHIP | 0.01uF | | 50V |
| C341 | 1-126-163-11 | ELECT | 4.7uF | 20% | 50V |
| C342 | 1-163-251-11 | CERAMIC CHIP | 100PF | 5% | 50V |
| C400 | 1-124-257-00 | ELECT | 2.2uF | 20% | 50V |
| C401 | 1-136-165-00 | FILM | 0.1uF | 5% | 50V |
| C402 | 1-137-366-11 | FILM | 0.0022uF | 5% | 50V |
| C403 | 1-126-157-11 | ELECT | 10uF | 20% | 16V |
| C404 | 1-137-366-11 | FILM | 0.0022uF | 5% | 50V |
| C405 | 1-126-157-11 | ELECT | 10uF | 20% | 16V |
| C406 | 1-124-465-00 | ELECT | 0.47uF | 20% | 50V |
| C411 | 1-163-009-11 | CERAMIC CHIP | 0.001uF | 10% | 50V |
| C431 | 1-126-163-11 | ELECT | 4.7uF | 20% | 50V |
| C432 | 1-163-251-11 | CERAMIC CHIP | 100PF | 5% | 50V |
| C441 | 1-126-163-11 | ELECT | 4.7uF | 20% | 50V |
| C442 | 1-163-251-11 | CERAMIC CHIP | 100PF | 5% | 50V |
| C501 | 1-126-157-11 | ELECT | 10uF | 20% | 16V |
| C502 | 1-163-031-11 | CERAMIC CHIP | 0.01uF | | 50V |

| Ref. No. | Part No. | Description | Remark |
|---|---|---|---|
| D640 | 8-719-914-43 | DIODE DAN202K | |
| D641 | 8-719-056-84 | DIODE UDZ-TE-17-7.5B | |
| D650 | 8-719-056-88 | DIODE UDZ-TE-17-11B | |
| D651 | 8-719-914-44 | DIODE DAP202K | |
| D652 | 8-719-056-88 | DIODE UDZ-TE-17-11B | |
| D661 | 8-719-105-99 | DIODE RD6.2M-B1 | |
| D662 | 8-719-105-99 | DIODE RD6.2M-B1 | |
| D664 | 8-719-105-99 | DIODE RD6.2M-B1 | |
| D667 | 8-719-105-99 | DIODE RD6.2M-B1 | |
| D669 | 8-719-105-99 | DIODE RD6.2M-B1 | |
| D670 | 8-719-105-99 | DIODE RD6.2M-B1 | |
| D671 | 8-719-056-88 | DIODE UDZ-TE-17-11B | |
| D672 | 8-719-105-99 | DIODE RD6.2M-B1 | |
| D673 | 8-719-105-99 | DIODE RD6.2M-B1 | |
| D680 | 8-719-988-62 | DIODE 1SS355 | |
| D682 | 8-719-105-99 | DIODE RD6.2M-B1 | |
| D683 | 8-719-105-99 | DIODE RD6.2M-B1 | |
| D705 | 8-719-048-98 | DIODE RB160L-40TE25 | |
| D901 | 8-719-049-38 | DIODE 1N5404TU | |
| D905 | 8-719-988-62 | DIODE 1SS355 | |
| D911 | 8-719-105-99 | DIODE RD6.2M-B1 | |
| D912 | 8-719-105-99 | DIODE RD6.2M-B1 | |
| D915 | 8-719-988-62 | DIODE 1SS355 | |
| D916 | 8-719-976-87 | DIODE DTZ3.9A | |
| D917 | 8-719-976-87 | DIODE DTZ3.9A | |
| | | < FUSE > | |
| F901 | 1-532-877-11 | FUSE (BLADE TYPE) (AUTO FUSE) 10A | |
| | | < IC > | |
| IC10 | 8-759-448-86 | IC TB2114FN(EL) | |
| IC81 | 8-759-711-82 | IC NJM4580E | |
| IC101 | 8-759-456-18 | IC MN1884820Y5F | |
| IC150 | 8-759-065-98 | IC SAA6579T | |
| IC201 | 8-759-823-87 | IC LB1638M | |
| IC210 | 8-752-079-79 | IC CXA2510AQ-T4 | |
| IC301 | 8-752-078-67 | IC CXA1946BQ-T6 | |
| IC302 | 8-759-711-82 | IC NJM4580E | |
| IC303 | 8-759-711-82 | IC NJM4580E | |
| IC404 | 8-759-711-82 | IC NJM4580E | |
| IC501 | 8-759-460-52 | IC uPD78058GC-462-3B9 | |
| IC551 | 8-759-363-81 | IC XC61AN4002PR | |
| IC571 | 8-759-449-89 | IC BA8270F-E2 | |
| IC601 | 8-759-347-50 | IC BA3918-V3 | |
| IC701 | 8-759-448-61 | IC HA13156 | |
| | | < JACK > | |
| J10 | 1-764-808-14 | JACK (ANTENNA) | |
| J680 | 1-566-822-41 | JACK (REMOTE IN) | |

| Ref. No. | Part No. | Description | Remark |
|---|---|---|---|
| | | < JUMPER RESISTOR > | |
| JR2 | 1-216-296-00 | CONDUCTOR, CHIP (3216) | |
| JR3 | 1-216-296-00 | CONDUCTOR, CHIP (3216) | |
| JR4 | 1-216-296-00 | CONDUCTOR, CHIP (3216) | |
| JR8 | 1-216-296-00 | CONDUCTOR, CHIP (3216) | |
| | | < COIL > | |
| L10 | 1-410-196-11 | INDUCTOR CHIP 2.2uH | |
| L11 | 1-410-196-11 | INDUCTOR CHIP 2.2uH | |
| L25 | 1-410-204-31 | INDUCTOR CHIP 10uH | |
| L26 | 1-410-204-31 | INDUCTOR CHIP 10uH | |
| L101 | 1-410-204-31 | INDUCTOR CHIP 10uH | |
| L102 | 1-410-204-31 | INDUCTOR CHIP 10uH | |
| L501 | 1-410-204-31 | INDUCTOR CHIP 10uH | |
| L901 | 1-411-669-12 | COIL, CHOKE | |
| | | < TRANSISTOR > | |
| Q10 | 8-729-106-68 | TRANSISTOR 2SD1615A-GP | |
| Q11 | 8-729-106-68 | TRANSISTOR 2SD1615A-GP | |
| Q70 | 8-729-920-21 | TRANSISTOR DTC314TKH04 | |
| Q80 | 8-729-920-21 | TRANSISTOR DTC314TKH04 | |
| Q85 | 8-729-921-25 | TRANSISTOR FMC2 | |
| Q90 | 8-729-920-21 | TRANSISTOR DTC314TKH04 | |
| Q101 | 8-729-429-92 | TRANSISTOR XN1211 | |
| Q102 | 8-729-027-23 | TRANSISTOR DTA114EKA-T146 | |
| Q103 | 8-729-027-38 | TRANSISTOR DTA144EKA-T146 | |
| Q110 | 8-729-230-49 | TRANSISTOR 2SC2712-YG | |
| Q111 | 8-729-900-53 | TRANSISTOR DTC114EK | |
| Q201 | 8-729-030-18 | TRANSISTOR 2SD2525 | |
| Q202 | 8-729-027-23 | TRANSISTOR DTA114EKA-T146 | |
| Q203 | 8-729-106-60 | TRANSISTOR 2SB1115A | |
| Q231 | 8-729-920-21 | TRANSISTOR DTC314TKH04 | |
| Q241 | 8-729-920-21 | TRANSISTOR DTC314TKH04 | |
| Q251 | 8-729-921-25 | TRANSISTOR FMC2 | |
| Q331 | 8-729-015-39 | TRANSISTOR DTC323TK | |
| Q341 | 8-729-015-39 | TRANSISTOR DTC323TK | |
| Q431 | 8-729-015-39 | TRANSISTOR DTC323TK | |
| Q441 | 8-729-015-39 | TRANSISTOR DTC323TK | |
| Q571 | 8-729-027-23 | TRANSISTOR DTA114EKA-T146 | |
| Q572 | 8-729-900-53 | TRANSISTOR DTC114EK | |
| Q573 | 8-729-027-38 | TRANSISTOR DTA144EKA-T146 | |
| Q574 | 8-729-230-49 | TRANSISTOR 2SC2712-YG | |
| Q630 | 8-729-230-49 | TRANSISTOR 2SC2712-YG | |
| Q640 | 8-729-230-49 | TRANSISTOR 2SC2712-YG | |
| Q650 | 8-729-921-25 | TRANSISTOR FMC2 | |
| Q651 | 8-729-030-18 | TRANSISTOR 2SD2525 | |
| Q652 | 8-729-030-18 | TRANSISTOR 2SD2525 | |
| Q653 | 8-729-921-25 | TRANSISTOR FMC2 | |



www.manualscenter.com

## MAIN

| Ref. No. | Part No. | Description | | | | Remark |
|---|---|---|---|---|---|---|
| Q655 | 8-729-216-22 | TRANSISTOR | 2SA1162-G | | | |
| Q656 | 8-729-230-49 | TRANSISTOR | 2SC2712-YG | | | |
| Q657 | 8-729-027-23 | TRANSISTOR | DTA114EKA-T146 | | | |
| Q658 | 8-729-027-23 | TRANSISTOR | DTA114EKA-T146 | | | |
| Q731 | 8-729-015-39 | TRANSISTOR | DTC323TK | | | |
| Q741 | 8-729-015-39 | TRANSISTOR | DTC323TK | | | |
| Q751 | 8-729-015-39 | TRANSISTOR | DTC323TK | | | |
| Q761 | 8-729-015-39 | TRANSISTOR | DTC323TK | | | |
| Q911 | 8-729-021-94 | TRANSISTOR | 2SK1657-T1B | | | |
| Q912 | 8-729-021-94 | TRANSISTOR | 2SK1657-T1B | | | |
| Q913 | 8-729-027-23 | TRANSISTOR | DTA114EKA-T146 | | | |
| Q914 | 8-729-900-53 | TRANSISTOR | DTC114EK | | | |
| | | < RESISTOR > | | | | |
| R10 | 1-216-049-11 | METAL GLAZE | 1K | 5% | 1/10W | |
| R11 | 1-216-037-00 | METAL CHIP | 330 | 5% | 1/10W | |
| R12 | 1-216-073-00 | METAL CHIP | 10K | 5% | 1/10W | |
| R13 | 1-216-025-00 | METAL GLAZE | 100 | 5% | 1/10W | |
| R15 | 1-216-075-00 | METAL CHIP | 12K | 5% | 1/10W | |
| R16 | 1-216-077-00 | METAL CHIP | 15K | 5% | 1/10W | |
| R17 | 1-216-049-11 | METAL GLAZE | 1K | 5% | 1/10W | |
| R18 | 1-216-049-11 | METAL GLAZE | 1K | 5% | 1/10W | |
| R19 | 1-216-073-00 | METAL CHIP | 10K | 5% | 1/10W | |
| R20 | 1-216-061-00 | METAL CHIP | 3.3K | 5% | 1/10W | |
| R21 | 1-216-041-00 | METAL CHIP | 470 | 5% | 1/10W | |
| R70 | 1-216-057-00 | METAL CHIP | 2.2K | 5% | 1/10W | |
| R71 | 1-216-073-00 | METAL CHIP | 10K | 5% | 1/10W | |
| R80 | 1-216-073-00 | METAL CHIP | 10K | 5% | 1/10W | |
| R81 | 1-216-097-00 | METAL GLAZE | 100K | 5% | 1/10W | |
| R82 | 1-216-073-00 | METAL CHIP | 10K | 5% | 1/10W | |
| R83 | 1-216-063-00 | METAL CHIP | 3.9K | 5% | 1/10W (AEP,UK) | |
| R83 | 1-216-073-00 | METAL CHIP | 10K | 5% | 1/10W (G) | |
| R84 | 1-216-069-00 | METAL CHIP | 6.8K | 5% | 1/10W | |
| R85 | 1-216-069-00 | METAL CHIP | 6.8K | 5% | 1/10W | |
| R86 | 1-216-089-00 | METAL GLAZE | 47K | 5% | 1/10W | |
| R87 | 1-216-045-00 | METAL CHIP | 680 | 5% | 1/10W | |
| R90 | 1-216-073-00 | METAL CHIP | 10K | 5% | 1/10W | |
| R91 | 1-216-097-00 | METAL GLAZE | 100K | 5% | 1/10W | |
| R92 | 1-216-073-00 | METAL CHIP | 10K | 5% | 1/10W | |
| R93 | 1-216-063-00 | METAL CHIP | 3.9K | 5% | 1/10W (AEP,UK) | |
| R93 | 1-216-073-00 | METAL CHIP | 10K | 5% | 1/10W (G) | |
| R94 | 1-216-069-00 | METAL CHIP | 6.8K | 5% | 1/10W | |
| R95 | 1-216-069-00 | METAL CHIP | 6.8K | 5% | 1/10W | |
| R101 | 1-216-049-11 | METAL GLAZE | 1K | 5% | 1/10W | |
| R102 | 1-216-097-00 | METAL GLAZE | 100K | 5% | 1/10W | |
| R110 | 1-216-097-00 | METAL GLAZE | 100K | 5% | 1/10W | |
| R112 | 1-216-097-00 | METAL GLAZE | 100K | 5% | 1/10W | |
| R114 | 1-216-097-00 | METAL GLAZE | 100K | 5% | 1/10W | |
| R117 | 1-216-089-00 | METAL GLAZE | 47K | 5% | 1/10W | |

| Ref. No. | Part No. | Description | | | | Remark |
|---|---|---|---|---|---|---|
| R118 | 1-216-073-00 | METAL CHIP | 10K | 5% | 1/10W | |
| R121 | 1-216-097-00 | METAL GLAZE | 100K | 5% | 1/10W | |
| R122 | 1-216-097-00 | METAL GLAZE | 100K | 5% | 1/10W | |
| R123 | 1-216-097-00 | METAL GLAZE | 100K | 5% | 1/10W | |
| R124 | 1-216-097-00 | METAL GLAZE | 100K | 5% | 1/10W | |
| R125 | 1-216-097-00 | METAL GLAZE | 100K | 5% | 1/10W | |
| R126 | 1-216-097-00 | METAL GLAZE | 100K | 5% | 1/10W | |
| R130 | 1-216-113-00 | METAL CHIP | 470K | 5% | 1/10W | |
| R131 | 1-216-119-00 | METAL CHIP | 820K | 5% | 1/10W | |
| R150 | 1-216-057-00 | METAL CHIP | 2.2K | 5% | 1/10W | |
| R151 | 1-216-129-00 | METAL CHIP | 2.2M | 5% | 1/10W | |
| R152 | 1-216-097-00 | METAL GLAZE | 100K | 5% | 1/10W | |
| R153 | 1-216-097-00 | METAL GLAZE | 100K | 5% | 1/10W | |
| R201 | 1-216-150-00 | METAL GLAZE | 10 | 5% | 1/8W | |
| R202 | 1-216-150-00 | METAL GLAZE | 10 | 5% | 1/8W | |
| R203 | 1-216-150-00 | METAL GLAZE | 10 | 5% | 1/8W | |
| R204 | 1-216-150-00 | METAL GLAZE | 10 | 5% | 1/8W | |
| R205 | 1-216-073-00 | METAL CHIP | 10K | 5% | 1/10W | |
| R206 | 1-216-065-00 | METAL CHIP | 4.7K | 5% | 1/10W | |
| R207 | 1-216-049-11 | METAL GLAZE | 1K | 5% | 1/10W | |
| R230 | 1-216-097-00 | METAL GLAZE | 100K | 5% | 1/10W | |
| R231 | 1-216-097-00 | METAL GLAZE | 100K | 5% | 1/10W | |
| R232 | 1-216-027-00 | METAL CHIP | 120 | 5% | 1/10W | |
| R233 | 1-216-109-00 | METAL CHIP | 330K | 5% | 1/10W | |
| R234 | 1-216-079-00 | METAL CHIP | 18K | 5% | 1/10W | |
| R235 | 1-216-075-00 | METAL CHIP | 12K | 5% | 1/10W | |
| R236 | 1-216-089-00 | METAL GLAZE | 47K | 5% | 1/10W | |
| R240 | 1-216-097-00 | METAL GLAZE | 100K | 5% | 1/10W | |
| R241 | 1-216-097-00 | METAL GLAZE | 100K | 5% | 1/10W | |
| R242 | 1-216-027-00 | METAL CHIP | 120 | 5% | 1/10W | |
| R243 | 1-216-109-00 | METAL CHIP | 330K | 5% | 1/10W | |
| R244 | 1-216-079-00 | METAL CHIP | 18K | 5% | 1/10W | |
| R245 | 1-216-075-00 | METAL CHIP | 12K | 5% | 1/10W | |
| R246 | 1-216-089-00 | METAL GLAZE | 47K | 5% | 1/10W | |
| R250 | 1-216-682-11 | METAL CHIP | 20K | 0.5% | 1/10W | |
| R251 | 1-216-057-00 | METAL CHIP | 2.2K | 5% | 1/10W | |
| R252 | 1-216-065-00 | METAL CHIP | 4.7K | 5% | 1/10W | |
| R253 | 1-216-113-00 | METAL CHIP | 470K | 5% | 1/10W | |
| R261 | 1-216-081-00 | METAL CHIP | 22K | 5% | 1/10W | |
| R301 | 1-216-077-00 | METAL CHIP | 15K | 5% | 1/10W | |
| R303 | 1-216-073-00 | METAL CHIP | 10K | 5% | 1/10W | |
| R304 | 1-216-061-00 | METAL CHIP | 3.3K | 5% | 1/10W | |
| R305 | 1-216-295-00 | CONDUCTOR, CHIP | | | (2012) | |
| R306 | 1-216-061-00 | METAL CHIP | 3.3K | 5% | 1/10W | |
| R311 | 1-216-049-11 | METAL GLAZE | 1K | 5% | 1/10W | |
| R312 | 1-216-049-11 | METAL GLAZE | 1K | 5% | 1/10W | |
| R321 | 1-216-214-00 | METAL GLAZE | 4.7K | 5% | 1/8W | |
| R322 | 1-216-214-00 | METAL GLAZE | 4.7K | 5% | 1/8W | |
| R331 | 1-216-061-00 | METAL CHIP | 3.3K | 5% | 1/10W | |

| Ref. No. | Part No. | Description | | | | Remark |
|---|---|---|---|---|---|---|
| R332 | 1-216-067-00 | METAL CHIP | 5.6K | 5% | 1/10W | |
| R333 | 1-216-033-00 | METAL CHIP | 220 | 5% | 1/10W | |
| R334 | 1-216-089-00 | METAL GLAZE | 47K | 5% | 1/10W | |
| R341 | 1-216-061-00 | METAL CHIP | 3.3K | 5% | 1/10W | |
| R342 | 1-216-067-00 | METAL CHIP | 5.6K | 5% | 1/10W | |
| R343 | 1-216-033-00 | METAL CHIP | 220 | 5% | 1/10W | |
| R344 | 1-216-089-00 | METAL GLAZE | 47K | 5% | 1/10W | |
| R401 | 1-216-077-00 | METAL CHIP | 15K | 5% | 1/10W | |
| R403 | 1-216-073-00 | METAL CHIP | 10K | 5% | 1/10W | |
| R404 | 1-216-061-00 | METAL CHIP | 3.3K | 5% | 1/10W | |
| R405 | 1-216-295-00 | CONDUCTOR, CHIP | (2012) | | | |
| R406 | 1-216-061-00 | METAL CHIP | 3.3K | 5% | 1/10W | |
| R411 | 1-216-049-11 | METAL GLAZE | 1K | 5% | 1/10W | |
| R412 | 1-216-049-11 | METAL GLAZE | 1K | 5% | 1/10W | |
| R431 | 1-216-061-00 | METAL CHIP | 3.3K | 5% | 1/10W | |
| R432 | 1-216-067-00 | METAL CHIP | 5.6K | 5% | 1/10W | |
| R433 | 1-216-033-00 | METAL CHIP | 220 | 5% | 1/10W | |
| R434 | 1-216-089-00 | METAL GLAZE | 47K | 5% | 1/10W | |
| R441 | 1-216-061-00 | METAL CHIP | 3.3K | 5% | 1/10W | |
| R442 | 1-216-067-00 | METAL CHIP | 5.6K | 5% | 1/10W | |
| R443 | 1-216-033-00 | METAL CHIP | 220 | 5% | 1/10W | |
| R444 | 1-216-089-00 | METAL GLAZE | 47K | 5% | 1/10W | |
| R501 | 1-216-061-00 | METAL CHIP | 3.3K | 5% | 1/10W | |
| R505 | 1-216-049-11 | METAL GLAZE | 1K | 5% | 1/10W | |
| R506 | 1-216-057-00 | METAL CHIP | 2.2K | 5% | 1/10W | |
| R507 | 1-216-097-00 | METAL GLAZE | 100K | 5% | 1/10W | |
| R508 | 1-216-097-00 | METAL GLAZE | 100K | 5% | 1/10W | |
| R509 | 1-216-097-00 | METAL GLAZE | 100K | 5% | 1/10W | |
| R510 | 1-216-049-11 | METAL GLAZE | 1K | 5% | 1/10W | |
| R511 | 1-216-037-00 | METAL CHIP | 330 | 5% | 1/10W | |
| R512 | 1-216-057-00 | METAL CHIP | 2.2K | 5% | 1/10W | |
| R513 | 1-216-057-00 | METAL CHIP | 2.2K | 5% | 1/10W | |
| R514 | 1-216-057-00 | METAL CHIP | 2.2K | 5% | 1/10W | |
| R515 | 1-216-097-00 | METAL GLAZE | 100K | 5% | 1/10W | |
| R520 | 1-216-097-00 | METAL GLAZE | 100K | 5% | 1/10W | |
| R521 | 1-216-097-00 | METAL GLAZE | 100K | 5% | 1/10W | |
| R522 | 1-216-097-00 | METAL GLAZE | 100K | 5% | 1/10W | |
| R523 | 1-216-097-00 | METAL GLAZE | 100K | 5% | 1/10W | |
| R525 | 1-216-097-00 | METAL GLAZE | 100K | 5% | 1/10W | |
| R527 | 1-216-097-00 | METAL GLAZE | 100K | 5% | 1/10W | |
| R530 | 1-216-097-00 | METAL GLAZE | 100K | 5% | 1/10W | |
| R551 | 1-216-097-00 | METAL GLAZE | 100K | 5% | 1/10W | |
| R552 | 1-216-049-11 | METAL GLAZE | 1K | 5% | 1/10W | |
| R560 | 1-216-049-11 | METAL GLAZE | 1K | 5% | 1/10W | |
| R571 | 1-216-025-00 | METAL GLAZE | 100 | 5% | 1/10W | |
| R572 | 1-216-025-00 | METAL GLAZE | 100 | 5% | 1/10W | |
| R573 | 1-216-073-00 | METAL CHIP | 10K | 5% | 1/10W | |
| R574 | 1-216-206-00 | METAL GLAZE | 2.2K | 5% | 1/8W | |
| R576 | 1-216-097-00 | METAL GLAZE | 100K | 5% | 1/10W | |

| Ref. No. | Part No. | Description | | | | Remark |
|---|---|---|---|---|---|---|
| R577 | 1-216-089-00 | METAL GLAZE | 47K | 5% | 1/10W | |
| R578 | 1-216-017-00 | METAL GLAZE | 47 | 5% | 1/10W | |
| R630 | 1-216-206-00 | METAL GLAZE | 2.2K | 5% | 1/8W | |
| R631 | 1-216-073-00 | METAL CHIP | 10K | 5% | 1/10W | |
| R632 | 1-216-089-00 | METAL GLAZE | 47K | 5% | 1/10W | |
| R633 | 1-216-089-00 | METAL GLAZE | 47K | 5% | 1/10W | |
| R634 | 1-216-081-00 | METAL CHIP | 22K | 5% | 1/10W | |
| R640 | 1-216-206-00 | METAL GLAZE | 2.2K | 5% | 1/8W | |
| R643 | 1-216-089-00 | METAL GLAZE | 47K | 5% | 1/10W | |
| R644 | 1-216-081-00 | METAL CHIP | 22K | 5% | 1/10W | |
| R650 | 1-216-049-11 | METAL GLAZE | 1K | 5% | 1/10W | |
| R651 | 1-216-049-11 | METAL GLAZE | 1K | 5% | 1/10W | |
| R655 | 1-216-073-00 | METAL CHIP | 10K | 5% | 1/10W | |
| R656 | 1-216-067-00 | METAL CHIP | 5.6K | 5% | 1/10W | |
| R657 | 1-216-097-00 | METAL GLAZE | 100K | 5% | 1/10W | |
| R658 | 1-216-675-11 | METAL CHIP | 10K | 0.5% | 1/10W | |
| R659 | 1-216-675-11 | METAL CHIP | 10K | 0.5% | 1/10W | |
| R661 | 1-216-025-00 | METAL GLAZE | 100 | 5% | 1/10W | |
| R662 | 1-216-057-00 | METAL CHIP | 2.2K | 5% | 1/10W | |
| R664 | 1-216-057-00 | METAL CHIP | 2.2K | 5% | 1/10W | |
| R667 | 1-216-057-00 | METAL CHIP | 2.2K | 5% | 1/10W | |
| R669 | 1-216-025-00 | METAL GLAZE | 100 | 5% | 1/10W | |
| R670 | 1-216-025-00 | METAL GLAZE | 100 | 5% | 1/10W | |
| R671 | 1-216-025-00 | METAL GLAZE | 100 | 5% | 1/10W | |
| R672 | 1-216-025-00 | METAL GLAZE | 100 | 5% | 1/10W | |
| R673 | 1-216-025-00 | METAL GLAZE | 100 | 5% | 1/10W | |
| R675 | 1-216-699-11 | METAL CHIP | 100K | 0.5% | 1/10W | |
| R676 | 1-216-699-11 | METAL CHIP | 100K | 0.5% | 1/10W | |
| R680 | 1-216-675-11 | METAL CHIP | 10K | 0.5% | 1/10W | |
| R681 | 1-216-675-11 | METAL CHIP | 10K | 0.5% | 1/10W | |
| R682 | 1-216-025-00 | METAL GLAZE | 100 | 5% | 1/10W | |
| R683 | 1-216-025-00 | METAL GLAZE | 100 | 5% | 1/10W | |
| R701 | 1-216-134-00 | METAL CHIP | 2.2 | 5% | 1/8W | |
| R702 | 1-216-134-00 | METAL CHIP | 2.2 | 5% | 1/8W | |
| R703 | 1-216-134-00 | METAL CHIP | 2.2 | 5% | 1/8W | |
| R704 | 1-216-134-00 | METAL CHIP | 2.2 | 5% | 1/8W | |
| R705 | 1-216-134-00 | METAL CHIP | 2.2 | 5% | 1/8W | |
| R706 | 1-216-134-00 | METAL CHIP | 2.2 | 5% | 1/8W | |
| R707 | 1-216-134-00 | METAL CHIP | 2.2 | 5% | 1/8W | |
| R708 | 1-216-134-00 | METAL CHIP | 2.2 | 5% | 1/8W | |
| R715 | 1-216-061-00 | METAL CHIP | 3.3K | 5% | 1/10W | |
| R731 | 1-216-053-00 | METAL CHIP | 1.5K | 5% | 1/10W | |
| R732 | 1-216-055-00 | METAL CHIP | 1.8K | 5% | 1/10W | |
| R741 | 1-216-053-00 | METAL CHIP | 1.5K | 5% | 1/10W | |
| R742 | 1-216-055-00 | METAL CHIP | 1.8K | 5% | 1/10W | |
| R751 | 1-216-053-00 | METAL CHIP | 1.5K | 5% | 1/10W | |
| R752 | 1-216-055-00 | METAL CHIP | 1.8K | 5% | 1/10W | |
| R761 | 1-216-053-00 | METAL CHIP | 1.5K | 5% | 1/10W | |
| R762 | 1-216-055-00 | METAL CHIP | 1.8K | 5% | 1/10W | |



www.manualscenter.com

**MAIN** **SUB**

| Ref. No. | Part No. | Description | | | | Remark |
|---|---|---|---|---|---|---|
| R910 | 1-216-089-00 | METAL GLAZE | 47K | 5% | 1/10W | |
| R911 | 1-216-057-00 | METAL CHIP | 2.2K | 5% | 1/10W | |
| R912 | 1-216-057-00 | METAL CHIP | 2.2K | 5% | 1/10W | |
| R915 | 1-216-017-00 | METAL GLAZE | 47 | 5% | 1/10W | |
| R916 | 1-216-089-00 | METAL GLAZE | 47K | 5% | 1/10W | |
| R917 | 1-216-081-00 | METAL CHIP | 22K | 5% | 1/10W | |
| R931 | 1-216-049-11 | METAL GLAZE | 1K | 5% | 1/10W | |
| R941 | 1-216-049-11 | METAL GLAZE | 1K | 5% | 1/10W | |
| | | < VARIABLE RESISTOR > | | | | |
| RV110 | 1-238-861-11 | RES, ADJ, CERMET 470K | | | | |
| RV231 | 1-238-856-11 | RES, ADJ, CERMET 10K | | | | |
| RV241 | 1-238-856-11 | RES, ADJ, CERMET 10K | | | | |
| | | < SWITCH > | | | | |
| S501 | 1-571-478-11 | SWITCH, SLIDE (POWER SELECT) | | | | |
| S551 | 1-571-532-21 | SWITCH, TACTILE (RESET) | | | | |
| S560 | 1-762-108-11 | SWITCH, PUSH (1 KEY) (NOSE DET) | | | | |
| | | < TUNER > | | | | |
| TU10 | A-3282-012-A | TUNER UNIT (TUX-006 (E)) | | | | |
| | | < VIBRATOR > | | | | |
| X10 | 1-577-126-51 | VIBRATOR, CRYSTAL (7.2MHz) | | | | |
| X101 | 1-579-952-21 | VIBRATOR, CERAMIC (8MHz) | | | | |
| X150 | 1-579-900-21 | VIBRATOR, CRYSTAL (4.332MHz) | | | | |
| X501 | 1-760-489-11 | VIBRATOR, CERAMIC (5MHz) | | | | |
| X502 | 1-760-928-21 | VIBRATOR, CRYSTAL (32.67kHz) | | | | |

**********

| | | | | | | |
|---|---|---|---|---|---|---|
| * | 1-665-379-11 | SUB BOARD | | | | |
| | | ********** | | | | |
| | | < CONNECTOR > | | | | |
| CN800 | 1-779-170-11 | SOCKET, CONNECTOR 20P | | | | |
| CN801 | 1-779-169-11 | SOCKET, CONNECTOR 18P | | | | |
| | | < DIODE > | | | | |
| D800 | 8-719-422-64 | DIODE MA8062-M | | | | |
| D801 | 8-719-422-64 | DIODE MA8062-M | | | | |
| D802 | 8-719-422-64 | DIODE MA8062-M | | | | |
| D803 | 8-719-422-64 | DIODE MA8062-M | | | | |
| LED800 | 8-719-058-14 | LED CL-220PG-C-TS (⏏) | | | | |
| | | < SWITCH > | | | | |
| LSW800 | 1-762-619-11 | SWITCH, KEY BOARD (WITH LED) (⏏) | | | | |
| | | < TRANSISTOR > | | | | |
| Q800 | 8-729-424-08 | TRANSISTOR UN2111 | | | | |
| Q801 | 8-729-421-22 | TRANSISTOR UN2211 | | | | |
| | | < RESISTOR > | | | | |
| R800 | 1-216-073-00 | METAL CHIP | 10K | 5% | 1/10W | |
| R801 | 1-216-073-00 | METAL CHIP | 10K | 5% | 1/10W | |
| R803 | 1-216-037-00 | METAL CHIP | 330 | 5% | 1/10W | |
| R804 | 1-216-049-11 | METAL GLAZE | 1K | 5% | 1/10W | |
| R805 | 1-216-049-11 | METAL GLAZE | 1K | 5% | 1/10W | |
| R806 | 1-216-049-11 | METAL GLAZE | 1K | 5% | 1/10W | |
| R807 | 1-216-049-11 | METAL GLAZE | 1K | 5% | 1/10W | |

**********

MISCELLANEOUS
**********

| | | |
|---|---|---|
| 2 | 1-776-527-41 | CORD (WITH CONNECTOR) (ISO) (POWER) |
| F901 | 1-532-877-11 | FUSE (BLADE TYPE) (AUTO FUSE) 10A |
| HP901 | 1-500-157-21 | HEAD, MAGNETIC (PLAYBACK) |
| M901 | A-3291-665-A | MOTOR ASSY, MAIN (CAPSTAN/REEL) |
| M902 | A-3291-664-A | MOTOR ASSY, SUB (LOADING/TAPE OPERATION) |
| S901 | 1-692-885-11 | SWITCH, ROTARY SLIDE (TAPE OPERATION) |

**********

ACCESSORIES & PACKING MATERIALS
**********

| | |
|---|---|
| 1-473-067-31 | REMOTE COMMANDER (RM-X2S) |
| 3-856-243-11 | MANUAL (COMMANDER), FITTING (ENGLISH, FRENCH,GERMAN,SPANISH,DUTCH,SWEDISH, ITALIAN,PORTUGUESE,CHINESE)(RM-X2S) |
| 3-859-378-11 | MANUAL, INSTRUCTION (ENGLISH,SPANISH, SWEDISH,PORTUGUESE) (AEP,UK) |
| 3-859-378-21 | MANUAL, INSTRUCTION (FRENCH,GERMAN, DUTCH,ITALIAN) (AEP) |
| 3-859-378-31 | MANUAL, INSTRUCTION (GERMAN) (G) |
| 3-859-379-11 | MANUAL, INSTRUCTION, INSTALL (ENGLISH, SPANISH,SWEDISH,PORTUGUESE) (AEP,UK) |
| 3-859-379-21 | MANUAL, INSTRUCTION, INSTALL (FRENCH, GERMAN,DUTCH,ITALIAN) (AEP,G) |
| X-3373-386-1 | CASE ASSY |

**********

| Ref. No. | Part No. | Description | Remark |
|---|---|---|---|
| | | ********** HARDWARE LIST ********** | |
| #1 | 7-621-772-30 | SCREW +B 2X6 | |
| #2 | 7-621-255-15 | SCREW +P 2X3 | |
| #3 | 7-685-793-09 | SCREW +PTT 2.6X8 (S) | |
| #4 | 7-628-253-00 | SCREW +PS 2X4 | |
| #5 | 7-685-105-19 | SCREW +P 2X8 TYPE2 NON-SLIT | |
| #6 | 7-627-553-17 | PRECISION SCREW +P 2X2 TYPE 3 | |
| #7 | 7-624-104-04 | STOP RING 2.0, TYPE -E | |
| | | PARTS FOR INSTALLATION AND CONNECTIONS ********** | |
| 201 | 3-011-653-11 | FRAME | |
| 202 | 3-386-828-01 | SCREW, FITTING | |
| * 203 | 3-358-697-01 | BUSHING | |
| 204 | 3-909-731-01 | KEY | |
| 205 | 3-012-213-21 | COLLAR | |
| 206 | 1-465-459-11 | ADAPTOR, ANTENNA | |
| 207 | 1-776-527-41 | CORD (WITH CONNECTOR) (ISO) (POWER) | |
| 208 | 1-775-543-11 | CORD, GROUND | |
| 209 | X-3369-817-1 | BRACKET ASSY (RM-X2S) | |

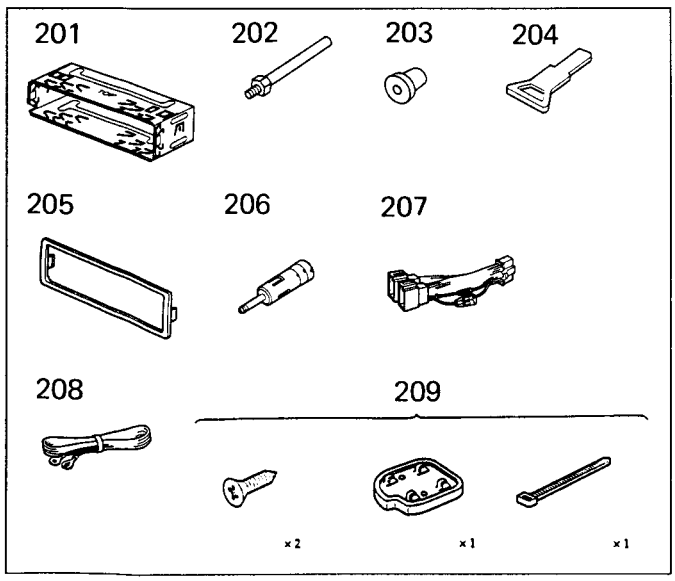




www.manualscenter.com