ORDER NO. AD8812324C2

Service Manual

COMPACT disc DIGITAL AUDIO

DIGITAL

Compact Disc Player

SL-P202A

Color

(K)...Black Type
(S)...Silver Type

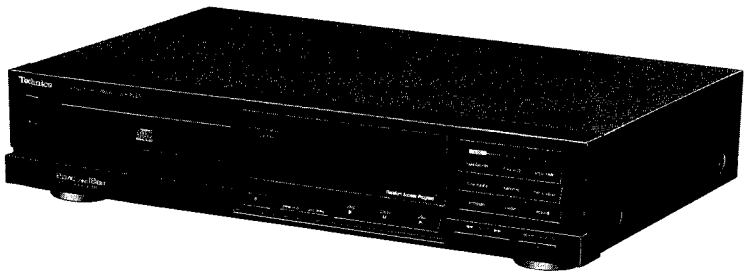

Area

Country Code	Area	Color
(E)	Continental Europe.	(K) (S)
(EK)	United Kingdom.	(K) (S)
(EG)	F.R. Germany.	(K) (S)
(EB)	Belgium.	(K) (S)
(EH)	Holland.	(K) (S)
(EF)	France.	(K) (S)
(Ei)	Italy.	(K) (S)

SPECIFICATIONS

■ Audio

No. of channels	2 (left and right, stereo)
Frequency response	2–20,000 Hz ± 0.5 dB
Output voltage	2 V (at 0 dB)
Dynamic range	96 dB
S/N ratio	96 dB
Total harmonic distortion	0.005% (1 kHz, 0 dB)
Harmonic distortion	0.003% (1 kHz, 0 dB)
Wow and flutter	Below measurable limit
Output impedance	Approx. 600Ω
Load impedance	More than 10 kΩ

■ Signal Format

Sampling frequency	44.1 kHz
D-A conversion	16-bit linear

■ Pickup

Wavelength	780 nm

■ General

Power supply	
For United Kingdom:	AC 50/60 Hz, 240V
For others:	AC 50/60 Hz, 220V
Power consumption	13 W
Dimensions (W x H x D)	430 x 92 x 278 mm
Weight	3.6 kg

Specifications subject to change without notice.
Weight and dimensions shown are approximate.

■ CONTENTS

	Page
PLACEMENT	2
ACCESSORIES	2
PRECAUTION OF LASER DIODE	3
LOCATION OF CONTROLS	4, 5
CONNECTIONS	6
CLEANING OF LENS	6
GROUNDING FOR ELECTROSTATIC BREAKDOWN PREVENTION	6
DISASSEMBLY INSTRUCTIONS	7 ~ 10
MEASUREMENTS AND ADJUSTMENTS	11, 12
TERMINAL FUNCTION OF IC's	13 ~ 17
BLOCK DIAGRAM	18, 19
INTERNAL CONNECTION OF FL	20
SCHEMATIC DIAGRAM	21 ~ 29
TERMINAL GUIDE OF IC's, TRANSISTORS AND DIODES	30
WIRING CONNECTION DIAGRAM	31
PRINTED CIRCUIT BOARDS	32 ~ 37
EXPLODED VIEW	38 ~ 40
REPLACEMENT PARTS LIST	41 ~ 43
RESISTORS & CAPACITORS	44 ~ 46
TECHANICAL INFORMATION	47 ~ 54
TROUBLESHOOTING GUIDE	55 ~ 57

www.manualscenter.com

Technics

Matsushita Electric Industrial Co., Ltd.
Central P.O. Box 288, Osaka 530-91, Japan

■ PLACEMENT

Before placement

Two transport security devices are secured to prevent the optical pickup from damage during transport.
Be sure to release them before use.

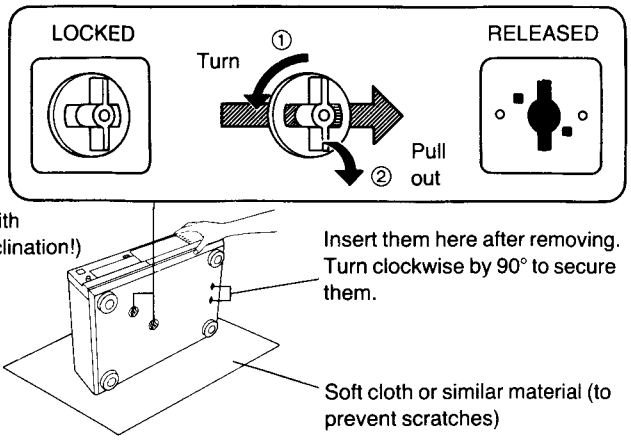

Note:
When transporting the unit, be sure to remove the compact disc from inside the unit. And replace the transport security devices again following the reverse order not to damage the optical pickup. (Make sure to place the unit with the rear panel facing downward.)

Notes of placement

- **Place on a flat, level surface so that the front-rear inclination does not exceed 5°.**
- **Avoid places such as the following:**
- Near any equipment or device that generates strong magnetism.
- On any heat-generating equipment or device, or in any place where the temperature is high (40°C or higher).
- Extremely cold places (5°C or below).
- Near a tuner or TV (It may cause noise in the broadcast, or disturbance of the TV picture.)
- **Do not place heavy objects, other than system components, on top of the unit.**
- **When carrying or storing the unit, handle it with care so it is not subjected to any strong bumps.**
  Always remove the disc before storing the unit for any period of time.
- **To avoid problems due to vibration.**
- Do not place a book or similar object under this unit.
- Do not route the connection cables (of this or other units) across the operation panel, across the top, or under the unit.

■ ACCESSORIES

- AC power supply cord .. 1
  SJA187 (E, EG, EB, EH, EF, Ei)
  SJA193 (EK)

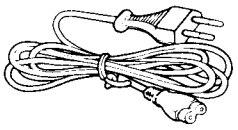

- Stereo connection cable 1
  (SJP2249–3)

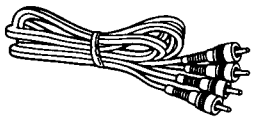

Note: Configuration of AC power supply cord differs according to area.

www.manualscenter.com

■ PRECAUTION OF LASER DIODE

CAUTION: This product utilizes a laser diode with the unit turned "on", invisible laser radiation is emitted from the pick up lens.
Wave length: 780nM
Maximum output radiation power from pick up: 100μW/VDE

Laser radiation from the pick up lens is safety level, but be sure the followings:

1. Do not disassemble the optical pick up unit, since radiation from exposed laserd diode is dangerous.
2. Do not adjust the variable resistor on the pickup unit. It was already adjusted.
3. Do not look at the focus lens using optical instruments.
4. Recommend not to look at pick up lens for a long time.

ACHTUNG: Dieses produkt enthält eine laserdiode. Im eingeschalteten zustand wird unsichtbare laserstrahlung von der lasereinheit abgestrahlt.

Wellenlänge: 780nM
Maximale strahlungsleistung der lasereinheit: 100μW/VDE

Die strahlung an der lasereinheit ist ungefährlich, wenn folgende punkte beachtet werden:

1. Die lasereinheit nicht zerlegen, da die strahlung an der freigelegten laserdiode gefährlich ist.
2. Den werksseitig justierten einstellregler der lasereinreit nicht verstellen.
3. Nicht mit optischen instrumenten in die fokussierlinse blicken.
4. Nicht über längere zeit in die fokussierlinse blicken.

ADVARSEL: I dette a apparat anvendes laser.

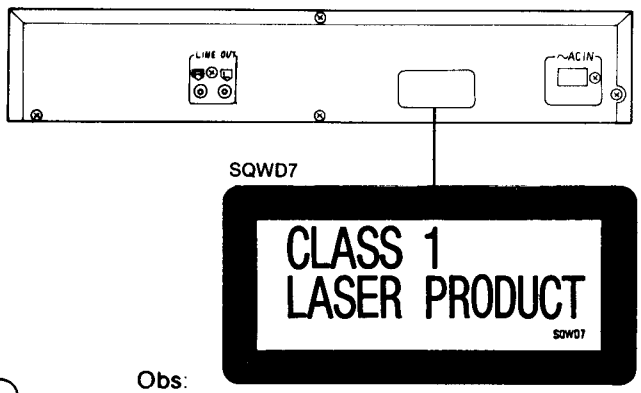

Obs:
Apparaten innehåller laser
Komponent av höger laserklass
än klass 1.

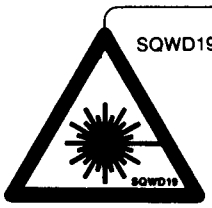

VAROITUS! Laite sisältää laserdiodin, joka lähettää näkymätöntä silmille vaarallista lasersäteilya

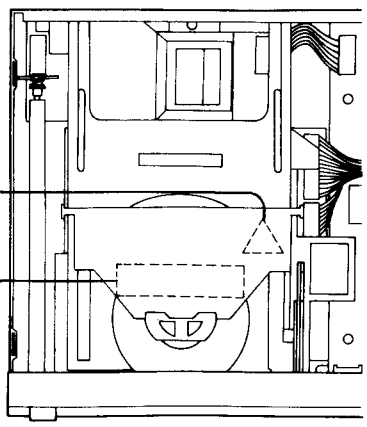

www.manualscenter.com

■ LOCATION OF CONTROLS

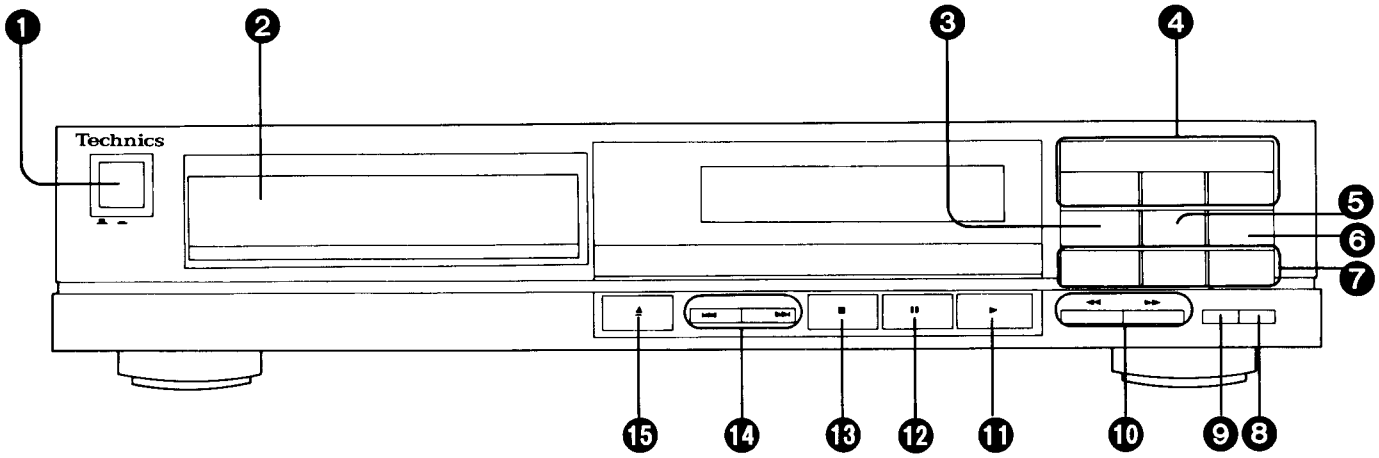

Control section

1 Power switch (power)

If a disc has already been loaded, play will begin when the power is turned ON.

2 Disc holder

3 Time mode select button (time mode)

4 Buttons for edit function (edit)

•Edit tape length button (tape length)

When compact discs are to be recorded to tape, this button can be used to calculate the number of tracks that can be recorded on each side of the tape, depending on the length of the cassette tape used, so that as little tape as possible is wasted.

•Tape-side select button (side A/B)

When recording compact discs to tape, this button can be used to check the number of tracks and amount of tape left over for side A or B.

•Disc link button (disc link)

This button can be used for edit recording from several discs.

5 Random play button (random)

This button can be used to play the tracks on a disc in a random sequence.

6 Music scan button (music scan)

This button can be used to play the first part of each track in order.

7 Buttons for program function

•Programmed-play button (program)

Pressing this button initiates the programmed play mode. You can then enter specific tracks using the skip buttons.

•Clear button (clear)

This button can be used to clear tracks from the programmed sequence one at a time.

•Recall button (recall)

This button can be used to display the contents of the programmed track sequence for confirmation.

8 Auto cue button (auto cue)

Pressing this button causes the unit to skip automatically to the beginning of the next track on the disc and switch to the play standby mode.

9 Repeat button (repeat)

10 Search buttons (◀◀ search ▶▶)

These buttons can be used to move rapidly forward or backward on the disc during play. The search speed is slow when the button is pressed at first and becomes faster if the button is pressed and held continuously.

11 Play button (▶ play)

12 Pause button (❚❚ pause)

13 Stop button (■ stop)

This button can be used to stop disc play, as well as to cancel the various play modes.

14 Skip buttons (|◀◀ skip/skip ▶▶|)

These buttons can be used to specify the number of the desired track and the desired recording time of the tape.

15 Disc holder open/close button (▲ open/close)

www.manualscenter.com

D

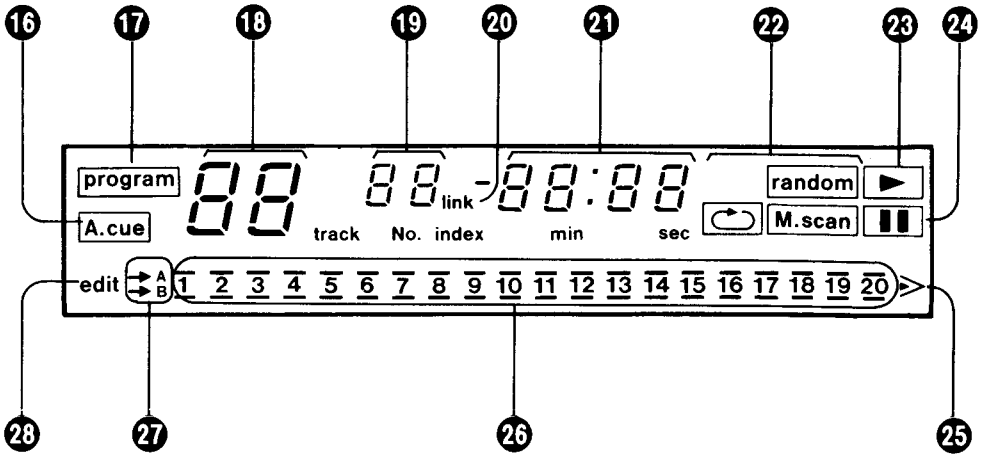

Indicators section

16 Auto cue indicator (A. cue)

17 Programmed-play indicator (program)

18 Track number display (track)

19 Index/program number display (index/No.)

20 Disc link indicator (link)

21 Time display (min/sec)

22 Operation indicators

The following indicators light during their respective operations.

random : Random play
⟲ : Repeat play
M. scan : Music scan

23 Play indicator (▶)

24 Pause indicator (❚❚)

25 "Over" mark (≫)

This indicator lights if the total number of tracks on the disc is 21 or more.

26 Track number indicator (1–20)

27 Tape side indicator (A/B)

28 Compact disc edit indicator (edit)

This unit can be operated by using remote control transmitters included with Technics receivers, etc. Face the remote control transmitter toward the control section of the unit.

Note:
Even though the play button of the remote control transmitter to be used is equipped with the pause function, only the play function is available for the unit.

www.manualscenter.com

■ CONNECTIONS

Turn power off on all components before making connections.

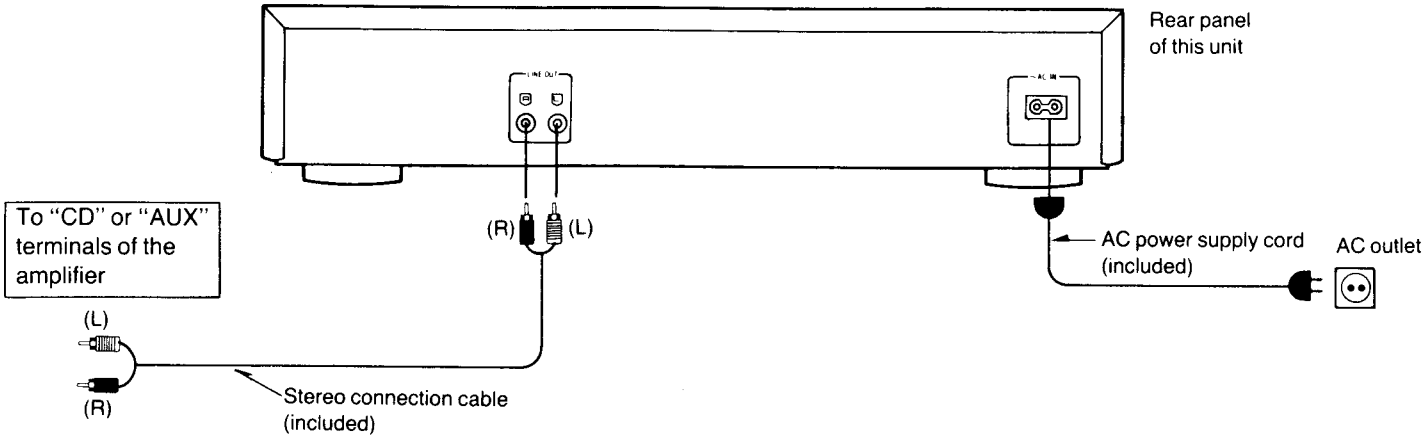

■ CLEANING OF LENS

If the lens is stained causing sound skip or operation failure, open the top cover by pressing the open button, and clean the lens.

• To remove dust or dirt

Blow the lens with the blower provided in the cleaning kit to remove dust or dirt.

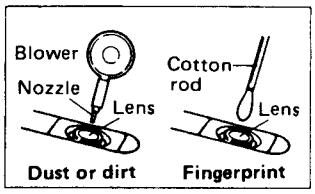

• To remove fingerprint

If the blower is not enough, moisten the cotton rod with the lens cleaner solution and wipe the lens with it from center of the lens to outside.

Cautions:

- Do not directly apply the cleaner solution to the lens. Do not apply too much solution to the cotton rod or otherwise the solution will flow into the player.
- Wipe the lens carefully. Do not give too much stress to the lens or otherwise it may scratch the lens or cause optical pickup trouble.
- If the solution should be too much applied, wipe the lens with a dry cotton rod.

Lens cleaning kit (Part No. : SZZP1038C)

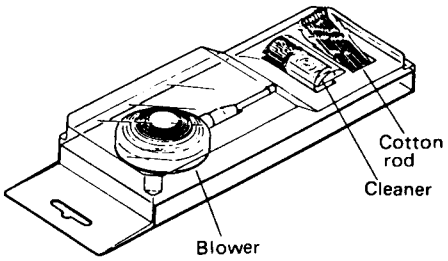

■ GROUNDING FOR ELECTROSTATIC BREAKDOWN PREVENTION

1 Human body grounding
Use the anti-static wrist strap to relieve the static electricity from your body.

2. Work table grounding
Put a conductive material (sheet) or steel sheet on the area where the optical pickup is placed, and ground the sheet.

Caution:

The static electricity of your clothes will not be grounded through the wrist strap. So, take care not to let your clothes touch the optical pickup.

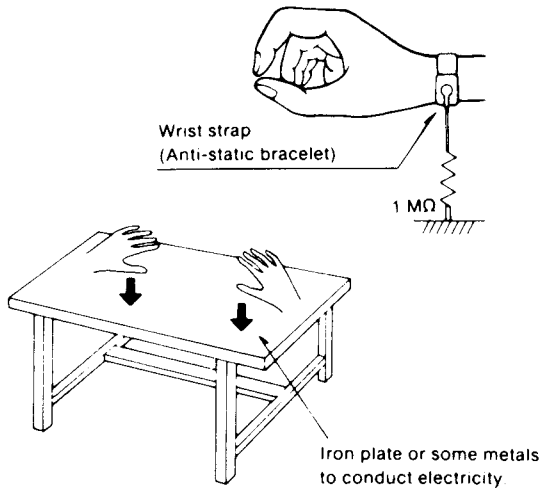

www.manualscenter.com

D

■ DISASSEMBLY INSTRUCTIONS

Warning: This product uses a laser diodes. Refer to caution statements on page 3.

ACHTUNG: • Die lasereinheit nicht zerlegen.
• Die lasereinheit darf nur gegen eine vom hersteller spezifizierte einheit ausgetauscht werden.

*** This CD player is equipped with FPC boards, so handle them with care during disassembly and reassembly.**

Ref. No. 1	How to remove the cabinet
Procedure 1	1. Remove the 5 screws (❶ ~ ❺).

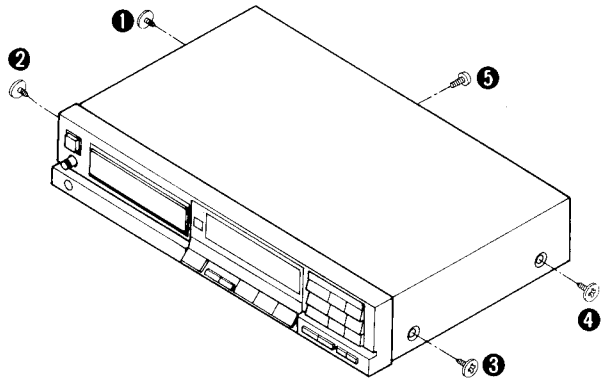

Ref. No. 2	How to remove the front panel
Procedure 1→2	1. Remove the 2 screws (❶, ❷). 2. Slightly pull out the front panel in the direction of the arrow (Ⓐ). 3. Remove the front panel in the direction of the arrow (Ⓑ).

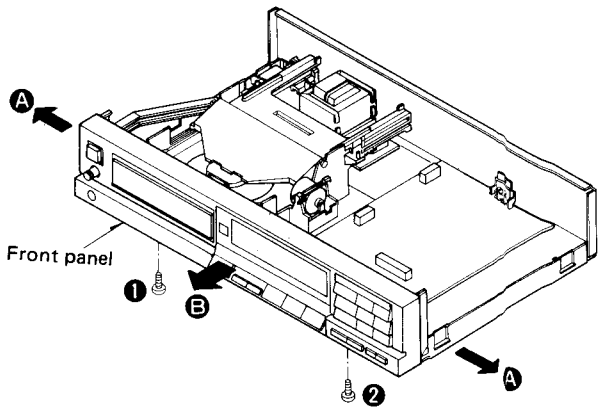

Ref. No. 3	How to remove the opeartion P.C.B.
Procedure 1→2→3	

1. Remove the 4 screws (❶ ~ ❹).
2. Release the 8 claws.

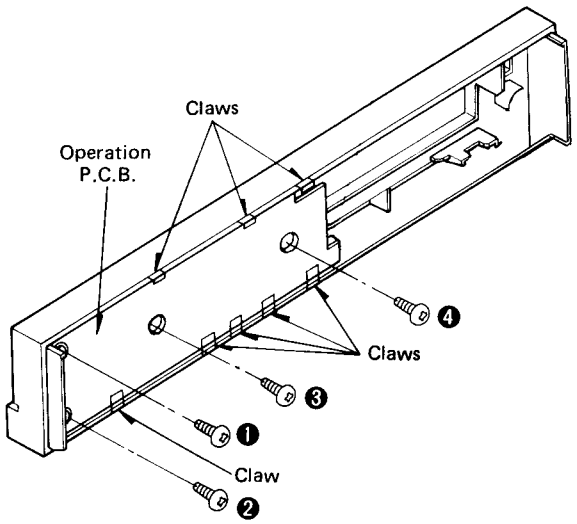

www.manualscenter.com

D

Ref. No. 4	How to remove the main P.C.B.
Procedure 1→2→3 →4	

1. Remove the 4 screws (❶~❹).
2. Remove the 3 connectors (CN11, CN12, CN401).
3. Lift the main P.C.B. off the retention posts on the chassis.
4. Remove the main P.C.B. in the direction of the arrow.

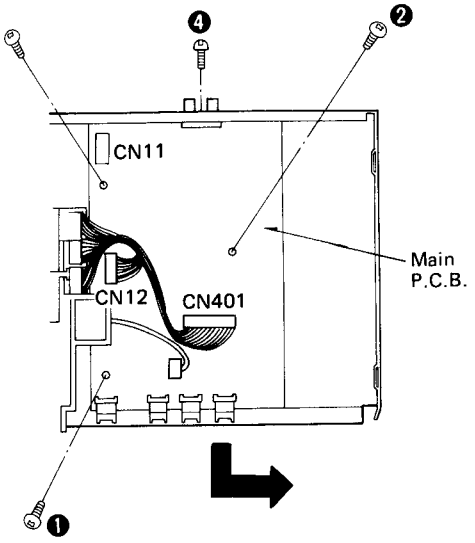

How to check the main P.C.B.

When checking the soldered surface of the main P.C.B. and replacing the parts, do as shown below.

1. Connect the main P.C.B. ground terminal (LINE OUT terminal) to the chassis with a lead wire.
2. Connect the operation P.C.B. ground terminal to the chassis with a lead wire.

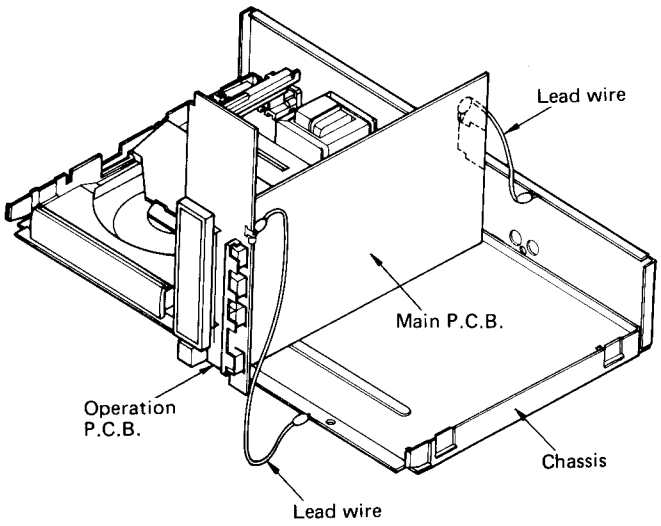

Ref. No. 5	How to remove the disc lid
Procedure 1→5	

1. Remove the spring.
2. Pull out the disc lid in the direction of the arrow.
3. Push the 2 claws in the direction of the arrow.

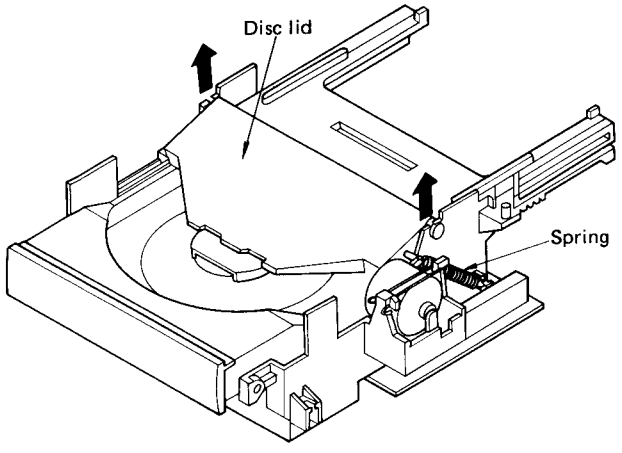

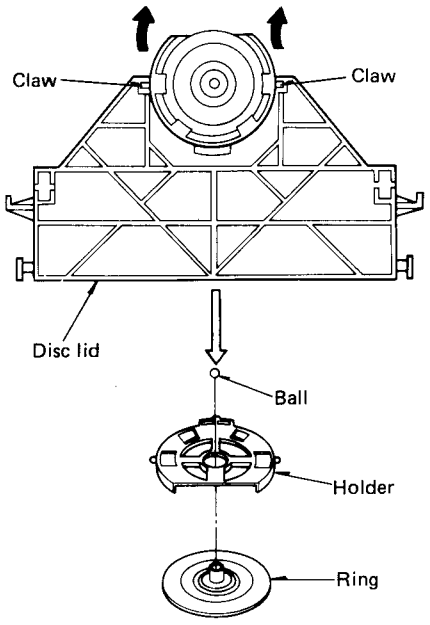

Caution: Be sure to handle the small ball carefully.

www.manualscenter.com

Ref. No. 6	How to remove the disc holder and power switch rod

Procedure 1→2→5→6

A. Disc holder

1. Pull the disc holder slowly in the direction of the arrow until the disc tray comes up.
2. Pull the disc holder until it stops.
3. Push the bracket of tray SW (S1001) in the direction of the arrow.
4. Pull out the disc holder further to remove it.

B. Power switch

1. Set the power switch in the "OFF" position.
2. Remove the power switch rod by using a screwdriver.

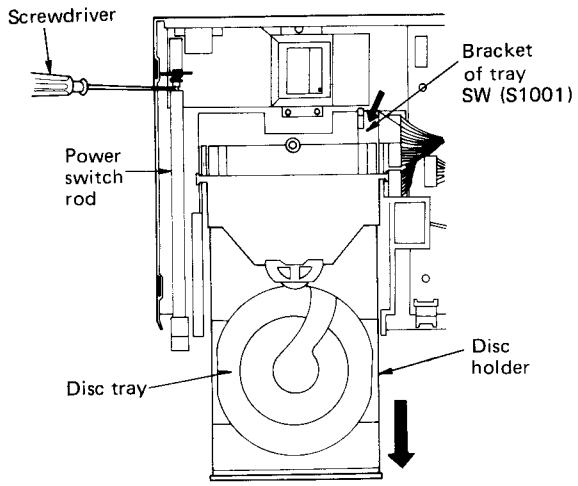

Ref. No. 7	How to remove the loading unit

Procedure 1→2→5 →6→7

1. Remove the 3 screws (❶~❸).
2. Remove the 2 connectors (CN12, CN401).

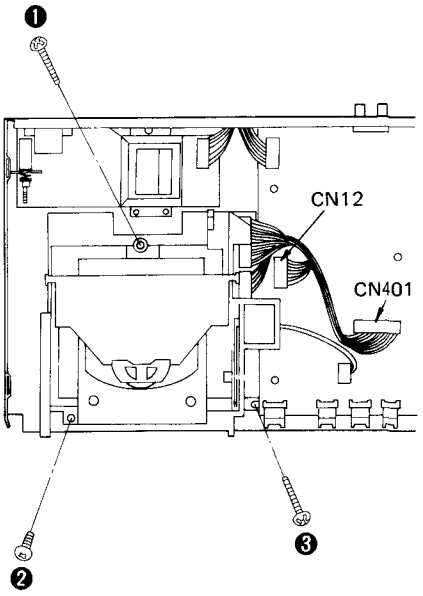

Ref. No. 8	How to check the servo P.C.B.

Procedure 1→7→8

• When checking the soldered surfaces of the servo P.C.B. and replacing the parts, do as shown below.

Note: Insert the loading unit into the tabs of the front panel. (Fixed loading unit)

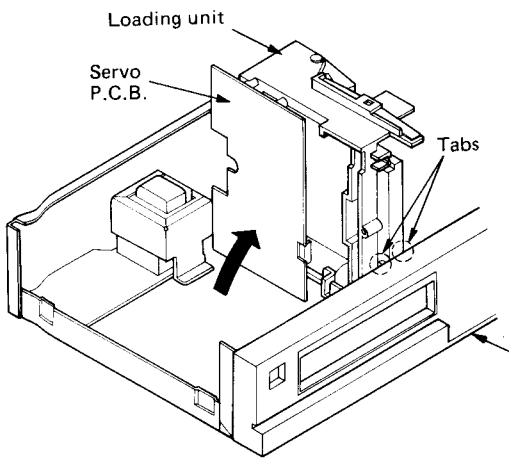

(To play a disc)

1. Place the test disc.
2. Turn "ON" the power switch of the player.
3. Push the bracket of tray SW (S1001) in the direction of the arrow and release it.

Note: If the test disc fails to rotate, press the tray switch again.

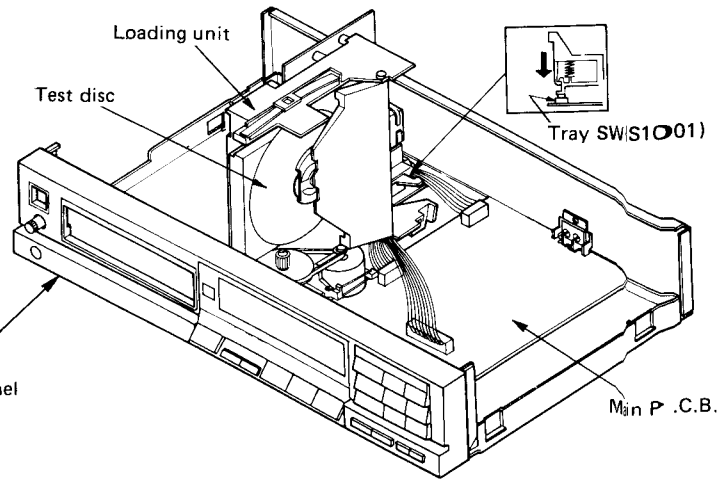

www.manualscenter.com

D

Ref. No. 9	How to remove the servo P.C.B.

Procedure 1→2→5 →6→7→9

1. Remove the 4 screws (❶~❹).
2. Remove the FPC board from the optical pickup.
3. Remove the connector (Ref. No. 32) of the turntable motor.

Caution: To prevent the breakdown of the laser diode, antistatic shorting pin is inserted into the FPC board.

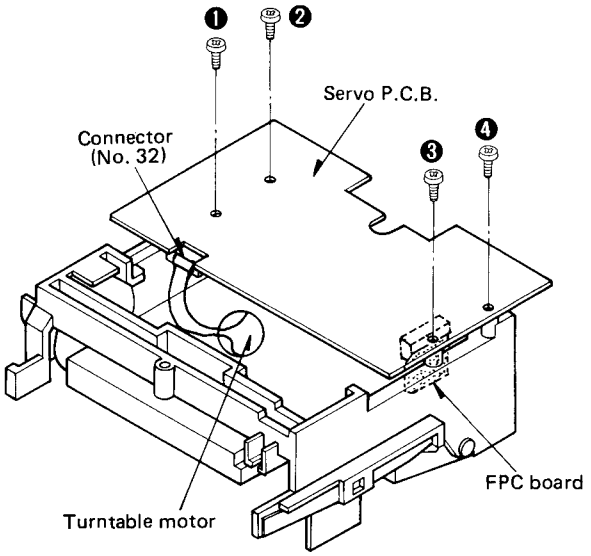

Ref. No. 10	How to remove the loading motor

Procedure 1→6→10

1. Remove the drive belt.
2. Release the clamping spring.
3. Unsolder the 2 terminals of the lead wire of the loading motor.

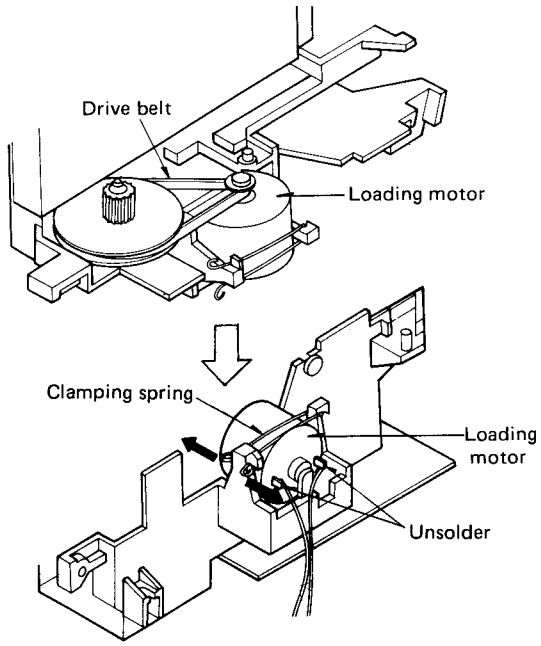

Ref. No. 11	How to remove the optical pickup unit

Procedure 1→2→5→6 →7→9→11

1. Remove the 4 screws (❶~❹).
2. Remove the FPC board from the optical pickup.

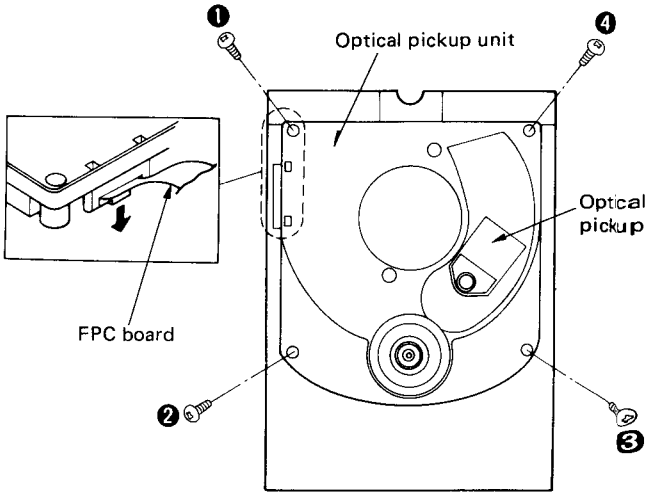

Ref. No. 12	How to remove the power supply P.C.B.

Procedure 1→6→12

1. Remove the 4 screws (❶~❹).
2. Remove the connector (CN1).

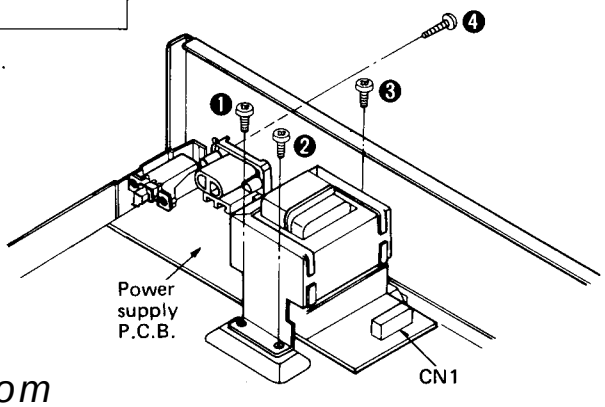

www.manualscenter.com

■ MEASUREMENTS AND ADJUSTMENTS

Caution:
It is very dangerous to look at or touch the laser beam. (Laser radiation is invisible.)
With the unit turned "on", laser radiation is emitted from the pickup lens.
Avoid exposure to the laser beam, especially when performing adjustments.

PREPARATION

1. Remove the cabinet (see Ref No. 1 of the disassembly instructions.)
2. Remove the disc holder (see Ref No. 6 of the same).
3. Place the test disc on the turntable.
4. Turn "ON" the power switch at the player.
5. Push the bracket of tray SW (S1001) in the direction of the arrow and release it.

Note: If the test disc fails to rotate, press the tray switch again.

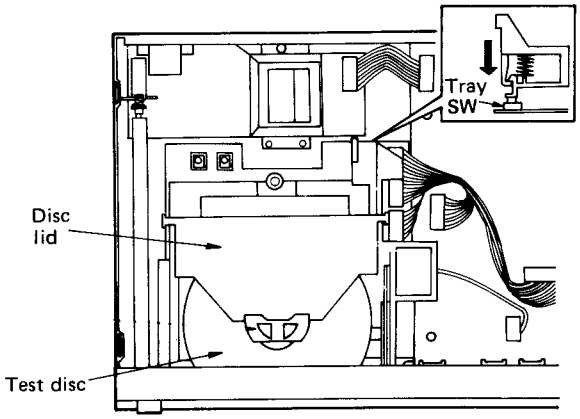

ADJUSTMENT POINTS

• **Servo P.C.B.**

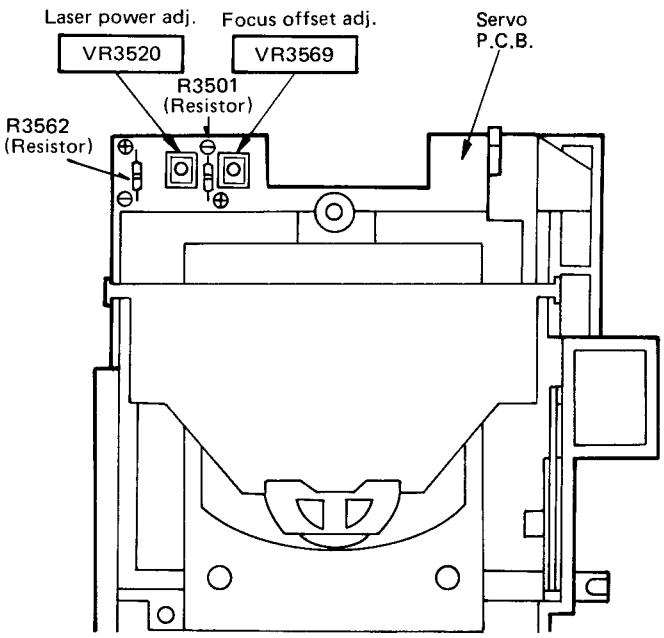

• **Main P.C.B.**

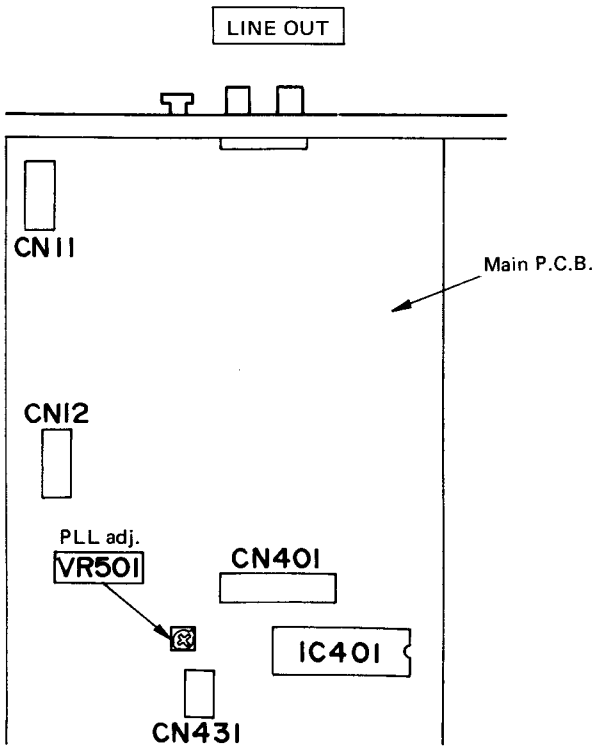

www.manualscenter.com

D

Measuring Instruments

* Playability test disc (SZZP1054C).
* Normal disc.
* Dual-beam oscilloscope with bandwidth of 30MHz or better (with EXT trigger and 1:1 probe).

(1) LASER POWER ADJUSTMENT

1. Connect the oscilloscope's CH1 probe across (+) and (−) of **R3501** (Resistor) on the servo P.C.B.
2. Switch the player power ON, and play track No. 1 on the test disc (SZZP1054C).
3. Adjust **VR3520** so that the voltage is **−50 ± 2mV.**

Oscilloscope setting:

VOLT . . . . . 20mV INPUT . . . . . DC
SWEEP . . . . . 0.2msec.

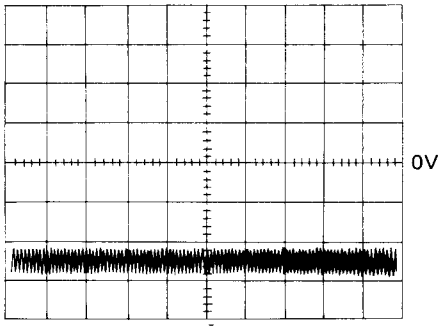

(2) FOCUS OFFSET ADJUSTMENT

1. Connect the oscilloscope's CH1 probe across (+) and (−) of **R3562** (Resistor) on the servo P.C.B.
2. Switch the player power ON, and play track No.1 on the test disc (SZZP1054C).
3. Adjust **VR3569** until the signal amplitude become in the center of **400mV.**

Oscilloscope setting:

VOLT . . . . . 200 mV INPUT . . . . . DC
SWEEP . . . . . 50msec.

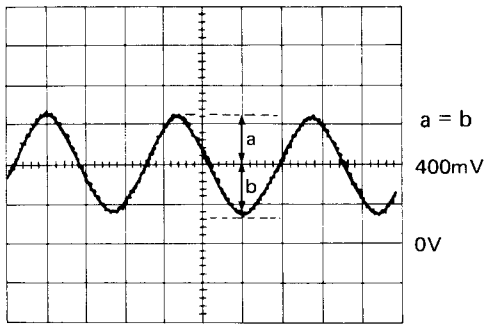

(3) PLL ADJUSTMENT

1. Connect CH1 of the oscilloscope to the **LINE OUT terminal** (either of Lch or Rch) and **ground.**
   Oscilloscope setting: VOLT 1V
   SWEEP . . . . . 1msec.
   INPUT . . . . . DC
2. Switch the player power ON, and play track No. 6 (wedge 0.7mm) on the test disc (SZZP1054C).
3. Check the waveform displayed on the oscilloscope and adjust **VR501** in the following steps.
   Step 1. Turn **VR501** clockwise slowly and observe the point at which the waveform on the oscilloscope begins to be disturbed.
   Step 2. Turn **VR501** counterclockwise slowly and observe the point at which the waveform on the oscilloscope begins to be disturbed.
   Step 3. Set **VR501** in the middle between the points observed in the above steps "1" and "2".

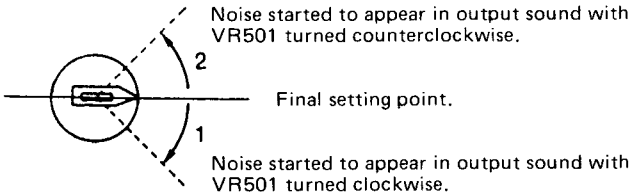

• **NG**

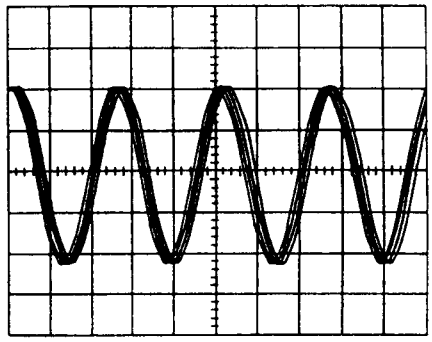

• **OK**

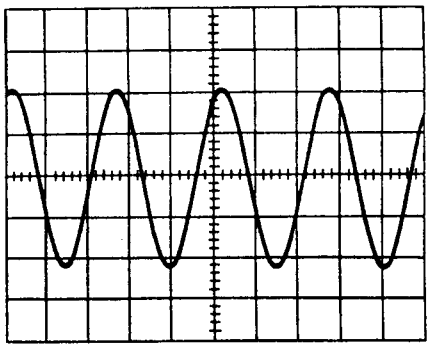

(4) CHECK OF PLAY OPERATION AFTER ADJUSTMENT

*** Checking Skip Search**

1. Play an ordinary musical program disc.
2. Press the skip button to check for normal skip search operation (in both the forward and reverse directions).

*** Checking Manual Search**

1. Play an ordinary musical program disc.
2. Press the manual search button to check for smooth manual search operations at either low or high speed (in both the forward and reverse directions).

*** Playability check by test disc**

1. Play the 0.7 mm black dot and the 0.7 mm wedge on the defect test disc (SZZP1054C) and verify that no sound skip or noise occurs.

www.manualscenter.com

■ TERMINAL FUNCTIONS OF IC's

• IC6501 (TDA8808T): Photo diode signal processor

Pin No.	Mark	I/O Division	Function
1	GCHF	I	Gain control input of HF amplifier. Current output from HF amplitude detector
2	Vp	I	Positive supply voltage
3	HFout	O	HF amplifier and equalizer voltage output
4	DET	I	HF detector voltage input
5	Sc	I	Starting up capacitor input
6	Si/$\overline{RD}$	I/O	On/off control (start input); ready signal output (starting up procedure successful)
7	Beq	I	Equalizer reference current input
8	Bgc	I	DC and LF gain control reference current input
9	FOC START	I	Focus normalizing circuit starting current
10	PLLH	O	PLL on hold output
11	$\overline{TL}$	O	Track loss output
12	$\overline{DODS}$	I	Drop out detector suppression input
13	Vext	I	Negative supply connection for FE and FElag output stage; also substrate connection
14	LPF	O	Low pass filter for Iret, used in track loss ($\overline{TL}$) detector and LF gain control

Pin No.	Mark	I/O Division	Function
15	FE	O	Current output of normalized, switched focus error signal
16	FElag	O	Current output of switched focus error signal, intended for lag network
17	LO	O	Laser amplifier current output
18	LM	I	Laser monitor diode input
19	GCLF	I	Gain control input for AC and LF amplifiers. Current output from LF amplitude detector
20	Re2	O	Summation of amplified currents from D3 and D4
21	Re1	O	Summation of amplified currents from D1 and D2
22, 23	D1, D2	I	Current inputs to DC and LF photo diode amplifier
24, 25	D3, D4	I	Current input to DC and LF photo diode amplifier
26	HFin	I	Current input to HF amplifier
27	GND	I	Ground connection of device
28	DEC	I	Decoupling input (internal bypass)

• IC6503 (TDA8809T): Radial error signal processor

Pin No.	Mark	I/O Division	Function
1	Vp	I	Positive supply voltage
2	Cosc1	I	Frequency setting capacitors for oscillator
3	Cosc2		
4	Rwob	I	Wobble generator input
5	Rosc	I	Biassing resistor for oscillator frequency and internal amplitude
6	$\overline{DIV4}$	I	Divide-by-4 input
7	REdig	O	Digital output of sign (Re2 – Re1)
8	B3	I	Input control bits for off-, catch-, plat- status and DAC output current
9	B2		
10	B1		
11	B0		
12	Vext(+)	I	Positive external voltage input
13	Vext(–)	I	Negative external voltage input (also substrate connection)
14	GND	I	GND terminal
15	RADout	O	Current output of amplified (Re2 – Re1) input currents
16	REin	I	Radial error input
17	RElag	O	Voltage output of integrated (Re2 – Re1) input currents

Pin No.	Mark	I/O Division	Function
18	Lag	I	Connection of integrator capacitor for (Re1 – Re2) input currents
19	Lead	O	Lead output
20	Vref	I	Internal reference voltage output
21	AGC	I	Gain control input for radial error signal
22	RDAC	O	Biassing resistor for current output for track jumping (3½ bits)
23	offset in	I	Offset control input for radial offset
24	offset off	O	Offset control output for radial offset
25	CLPF	I	Low-pass filter for Re1 and Re2, used for radial offset control
26	CHPF	I	High-pass filter for Re1 and Re2, used for radial offset control
27	Re1	I	Input for amplified currents from photo-diodes D1 and D2
28	Re2	I	Input for amplified currents from photo diodes D3 and D4

www.manualscenter.com

• IC301 (MN6625): Digital signal processing

Pin No.	Mark	I/O Division	Function
1	BYTCK	O	Serial data byte clock (Not used, open)
2	FCLK	O	Crystal frame clock (Not used, open)
3	DEMPH	O	De-emphasis ON signal (de-emphasis ON at "H") (Not used, open)
4	SRDATA	O	Serial data output (MSB first)
5	SCK	O	Serial bit clock output
6	LRCK	O	LR discrimination clock (88.2kHz)
7	WDCK	O	Serial data output word clock (Not used, open)
8	LDG	O	L channel deglitch signal (Not used, open)
9	RDG	O	R channel deglitch signal (Not used, open)
10	IPFLAG	O	Interpolation flag (interpolation at "H") (Not used, open)
11	FLAG	O	Error flag terminal (Not used, open)
12	XCK	O	Clock (16.9344 MHz) output (Not used, open)
13	TEST	I	Test mode selection (Not used, connected to +5V)
14	TX	O	Digital signal output (Not used, open)
15	SLEEP	I	Mode selector ("L":normal, "H":SLEEP mode) (Not used, connected to GND)
16	CSEL	I	Test terminal ("L": normal) (Not used, connected to GND)
17	X1	I	Clock input (16.9344 MHz)
18	X2	O	Clock output (16.9344 MHz) (Not used, open)
19	VSS	I	GND terminal
20	BLKCK	O	Sub-code Q data block clock (75 Hz)
21	$\overline{\text{CLDCK}}$	O	Sub-code frame clock (7.35kHz)
22	$\overline{\text{SUBQ}}$	O	Sub-code Q data
23	$\overline{\text{RST}}$	I	Reset command
24	MLD	I	Load command for mode control data

Pin No.	Mark	I/O Division	Function
25	MCLK	I	Data clock for MDATA
26	MDATA	I	Mode control data
27	DMUTE	I	Data mute command
28	$\overline{\text{TRON}}$	I	Tracking servo ON signal (tracking servo ON at "L")
29	STAT	O	Status command for CRC etc. . .
30	SUBC	O	Sub-code serial output data (Not used, open)
31	SBCK	I	Clock for sub-code serial output (Not used, open)
32	SMCK	O	System clock (4.2336MHz)
33	VDD	I	Power supply (connected to +5V)
34	MEMP	I	Deemphasis command
35	FG	I	Turntable motor FG signal input (Not used, open)
36	PC	O	Turntable motor ON command (ON at "L")
37	EC	O	Turntable motor drive signal
38	RESY	O	Resynchronizing signal (Not used, open)
39	DO	I	Drop-out detection signal (Drop-out at "H")
40	SRF	I	Sliced RF signal
41	EFM	I	Modulation data
42	PCK	I	PLL extract clock (4.2336MHz)
43	FPC	O	PLL frequency comparision signal
44 ⟆ 51	D7 ⟆ D0	I/O	16K RAM data input/output
52	RAM OE	O	Read out enable
53	RAM WE	O	Write enable
54 ⟆ 64	RAM A0 ⟆ RAM A10	O	16K RAM address signal (RAMA0: LSB, RAMA10: MSB)

www.manualscenter.com

D

• IC401 (MN1554PJE-2): System control

Pin No.	Mark	I/O Division	Function
1	VSS	I	GND terminal
2	DMUTE	O	Data mute command
3	MDATA	O	Mode control data
4	MCLK	O	Data clock for MDATA
5	MLD	O	Load command for mode control data
6	NC	–	Not connected
7	NC	–	Not connected
8	INH	O	Track loss det. signal output
9	MUTE	O	Muting signal output
10	EMPH	O	Deemphasis command
11	NC	–	Not connected
12	SIRQ	I	Track loss det. signal input
13	BLKCK	I	Sub-code Q data block clock (75 Hz)
14	$\overline{\text{CLDCK}}$	I	Sub-code Q data frame clock (7.35 KHz)
15	NC	–	Not connected
16	SUBQ	I	Sub-code Q data
17	RESET	I	Reset command
18	TL	I	Track loss signal
19	RE DIG	I	Radial error digital
20	HFD	I	HF detector output for PLLH
21	TRAY SW	I	Disc holder open/close det. signal input
22	DIV4	O	Radial error digital divided by four
23	DODS	O	Drop out detector suppression
24	MODEA	–	Not used, open
25	FR/REV	–	Not used, open
26	B0	O	Control bits for radial circuit
27	B1		
28	B2		
29	B3		
30	CLOSE	O	Disc tray "close" detection
31	OPEN	O	Disc tray "open" detection

Pin No.	Mark	I/O Division	Function
32	TR ON	O	Tracking servo ON command
33	VDD	I	Power supply (connected to +5V)
34	NC	–	Not connected
35	NC	–	Not connected
36	P53	–	Not used, open
37	P60	I	Period det. select signal input
38	POL	I	Period det. select signal input
39	SKATE	I	Period det. select signal input
40	STAT	I	Status command for CRC etc. . . .
41	SP0	I	Speed control code input
42	SP1		
43	SP2		
44	SP3		
45	RECV	I	Data receipt command signal
46	SEND	I	Data transmission command signal
47	ACK	I	Data discrimination signal
48	CLK	I	Data clock signal
49	DATA0	I	Key scan signal
50	DATA1		
51	DATA2		
52	DATA3		
53	CMD0	O	Command signal of access mode
54	CMD1		
55	CMD2		
56	CMD3		
57	NC	–	Not connected
58	NC	–	Not connected
59	NC	–	Not connected
60	SI/RD	I/O	On/off control for laser supply and focus circuit
61	OSC2	I	Clock input
62	OSC1	I	Clock input (4.2336 MHz)
63	XI	I	Digital input of signal
64	X0	–	Not used, open

www.manualscenter.com

D

• IC403 (MN1551 PJF-1):

Pin No.	Mark	I/O Division	Function
1	VDD	I	Power supply (connected to +5V)
2	NC	–	Not connected
3	NC	–	Not connected
4	TL	I	Track loss signal
5	REDIG	I	Radial error digital
6	DIV4	I	Radial error digital divided by four
7	SP3	O	Speed control code output
8	SP2		
9	SP1		
10	SP0		
11	SKATE	O	Period det. select signal output
12	POLAR	O	Period det. select signal output
13	DIVC	O	Period det. select signal output
14	SIRQ	O	Track loss det. signal output

Pin No.	Mark	I/O Division	Function
15	CMD0	I	Command signal of access mode
16	CMD1		
17	CMD2		
18	CMD3		
19	NC	–	Not connected
20	NC	–	Not connected
21	NC	–	Not connected
22	NC	–	Not connected
23	NC	–	Not connected
24	SYNC	–	Not connected
25	RESET	I	Reset command
26	OSC2	I	192 fs (8.4672 MHz) clock input
27	OSC1		
28	VSS	I	GND terminal

• IC601 (MN15283PEY–1): System control and FL drive

Pin No.	Mark	I/O Division	Function
1	VSS	I	GND terminal
2	X0	O	Not used, open
3	X1	I	Optical servo condition input (Not used, open)
4	O0 (RECV)	O	Data receipt command signal
5	O1 (SEND)	O	Data transmission command signal
6	O2 (ACK)	O	Data discrimination signal
7	O3 (CLK)	O	Data lock signal
8 ≀ 11	10 (D0) ≀ 13 (D3)	O	Key scan signal
12	SYNC	O	Not used, open
13	RST	I	Reset command (reset at "L")
14	IRQ/TC1	I	Remote control signal input
15 ≀ 18	50 ≀ 53	I	Key return signal
19	SBT	I	Sub-code frame clock (7.35 kHz) (Not used, open)
20	SBD	I	Sub-code Q data input (Not used, open)
21 ≀ 24	20 ≀ 23	O	Key scan signal
25	30	O	Key scan signal
26	31		

Pin No.	Mark	I/O Division	Function
27	32	–	Not used, open
28	33	O	Key scan signal
29	40	I	Key return signal
30	41		
31	42	–	Not used, open
32	43	–	Not used, open
33	P60	–	Not used, open
34	P61	–	Not used, open
35	DAC	–	Not used, open
36	VPP	I	FL drive power supply (connected to –28.3V)
37 ≀ 52	D0 ≀ D9 • DA ≀ DF	O	FL grid signal
53 ≀ 61	S8 ≀ S0	O	FL anode signal
62	VDD	I	Power supply (connected to +5V)
63	OSC2	I	Clock terminal
64	OSC1	I	Clock input

www.manualscenter.com

• IC501 (AN8371S): Data slice and PLL

Pin No.	Mark	I/O Division	Function
1	VEE	I	Power supply (connected to −5V)
2	SRF	O	Sliced RF signal
3	EFM	O	Modulation data
4	D.GND	I	GND terminal (digital system)
5	PCK	O	PLL extract clock (4.2336MHz)
6	VCC	I	Power supply (connected to +5V)
7	VA	I	VCO free run frequency adjusting current input (Not used, open)
8, 9	VC1, 2	I	Capacitor connection for VCO oscillator frequency
10	VR	I	Resistor connection for VCO oscillator frequency
11	PD	I	Capacitor connection for PLL DO protection
12	PL1	I	PLL loop filter connection
13	PL2	I	PLL loop filter connection
14	FPC	I	PLL frequency comparison signal
15	RF	I	Data
16	ARF	O	RF signal output with AGC output
17	AGC	I	ARF signal input for AGF drop-out detection input
18	AC	I	Loop filter for AGC connected
19	DO	O	Drop-out detection signal
20	A.GND	I	GND terminal (analog system)
21	DSL	I	RF signal input for data slicing
22	SLC	I	Slicing level control signal input (Not used, connected to GND)
23	FC1	I	Filter capacitor for data slicer connected
24	FC2	I	Filter capacitor for data slicer connected

•IC801 (MN6471): Digital filter and D/A converter

Pin No.	Mark	I/O Division	Function
1	MLD	I	Command load input (load: L)
2	RSTB	I	Reset command
3	IE	I	Not used, connected to GND
4	TP1	—	TEST terminal
5	TP2	—	
6	TEST1	I	TEST terminal 1 (connected to GND)
7	TEST2	I	TEST terminal 2 (connected to GND)
8	NC	—	Not connected
9	NC	—	Not connected
10	AVDD4	I	Power supply (connected to +4.7V)
11	OUTL (−)	O	Lch data output, (−) terminal
12	AVSS4	I	GND terminal
13	AVSS3	I	GND terminal
14	OUTL (+)	O	Lch data output, (+) terminal
15	AVDD3	I	Power supply (connected to +4.7V)
16	NC	—	Not connected
17	AVDD2	I	Power supply (connected to +4.7V)
18	OUTR (+)	O	Rch data output, (+) terminal
19	AVSS2	I	GND terminal (analog system)
20	AVSS1	I	GND terminal (analog system)
21	OUTR (−)	O	Rch data output, (−) terminal
22	AVDD1	I	Power supply (connected to +4.7V)
23	DVDD1	I	Power supply (connected to +4.3V)
24	DVSS1	I	GND terminal (digital system)
25	X2	O	Clock output
26	X1	I	Clock input
27	NC	—	Connected to GND
28	DVDD2	I	Power supply (connected to +4.3V)
29	DVSS2	I	GND terminal (digital system)
30	NSUB	I	Sub-strate terminal (Not used, connected to +4.3V)
31	ZFLGB	O	Zero input detector terminal (Not used, open)
32	192fs	O	192 fs (8.4672MHz)
33	LRPOL	I	LR clock selector (Not used, connected to +4.3V)
34	LRCLK	I	LR discrimination signal input
35	BCLK	I	Serial bit clock input
36	SRDATA	I	Serial data input (MSB first)
37	DVSS 3	I	GND terminal (digital system)
38	DVDD	I	Power supply (connected to +4.3V)
39	384 fs	O	384 fs (16.9344MHz) output
40	PD	I	Power down terminal (Not used, connected to GND)
41	MDATA	I	Mode control data
42	MCLK	I	Data clock for MDATA

■ BLOCK DIAGRAM

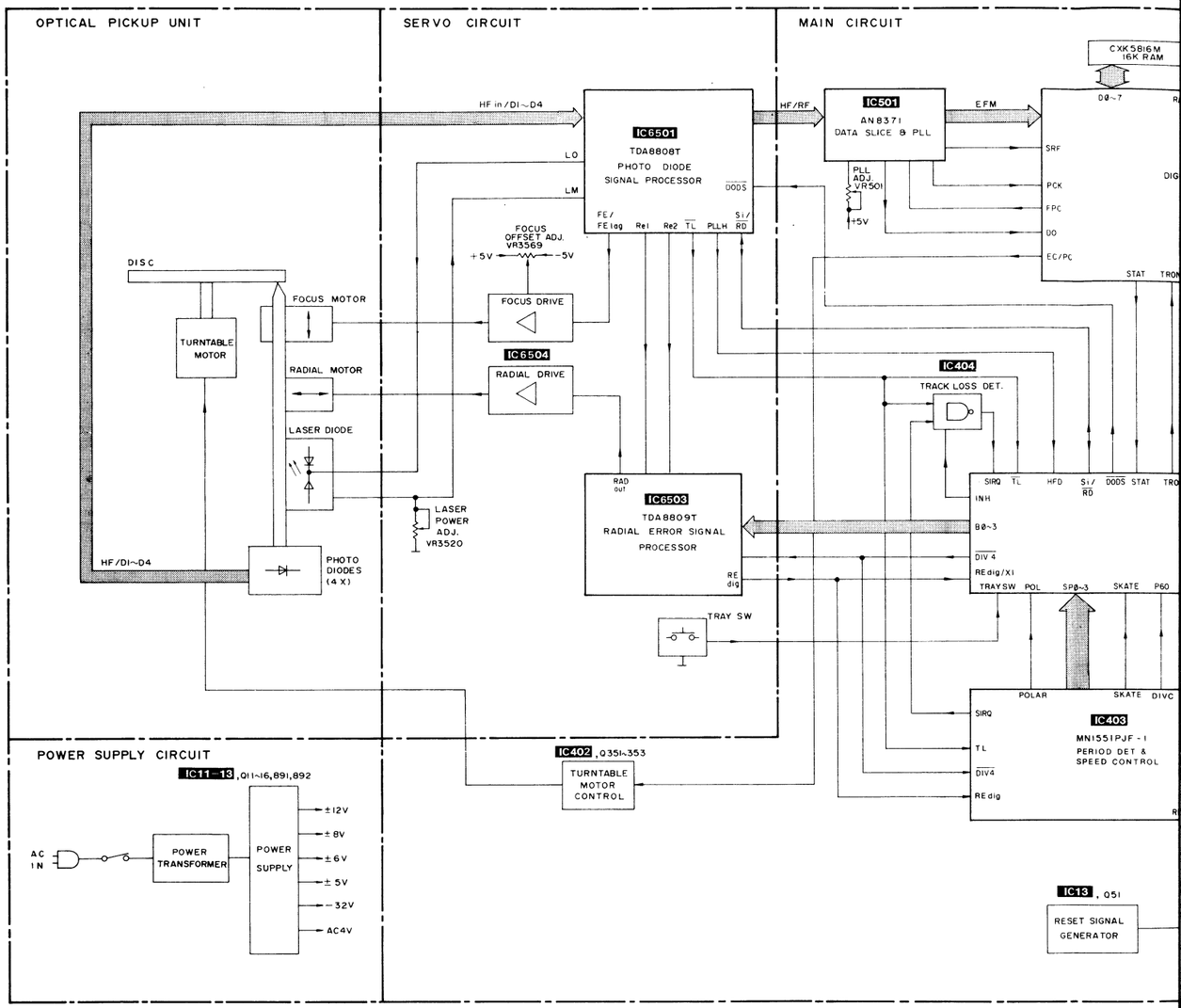

B0-B3 : Control bits for radial circuit.
DAC : Current output for track jumping. (Digital to Analogue Converted)
$\overline{DODS}$: Drop out detector supression.
D1-D4 : Photodiode currents.
FE : Focus error signal.
FE lag : Focus error signal for LAG network.
HF : HF output for DEMOD.
HFD : HF detector output for DEMOD.
HF-in : HF current input.
LM : Laser monitor diode input.
LO : Laser amplifier current output.
RE : Radial error signal (amplified RE2 -RE1 currents).
RE1 : Radial error signal 1 (summation of amplified currents D3 and D4).
RE2 : Radial error signal 2 (summation of amplified currents D1 and D2).

RE dig : Radial error digital.
RE lag : Radial error signal for LAG network
$\overline{RPU}$: Radial puls after track jumping.
Si/$\overline{RD}$: On/off control for laser supply and focus circuit.
$\overline{TL}$: Track loss signal.
Div4 : Radial error digital devided by four.
RF : Data
DO : Drop-out detection signal (Active High)
SRF : Sliced RF signal.
EFM : Modulation data.
PCK : PLL extract clock (4.2336MHz)
FPC : PLL frequency comparison signal
STAT : Status command for CRC etc.
DMUTE : Data mute command
MDATA : Mode control data
MLD : Load command for mode control data (Active Low)

MCLK
$\overline{SUBQ}$
$\overline{CLDCK}$
BLKCK
$\overline{RST}$
$\overline{TRON}$
EC
PC
SMCK
OE
WE
LRCK
SRDATA
SCK
MEMP

www.manualscenter.com

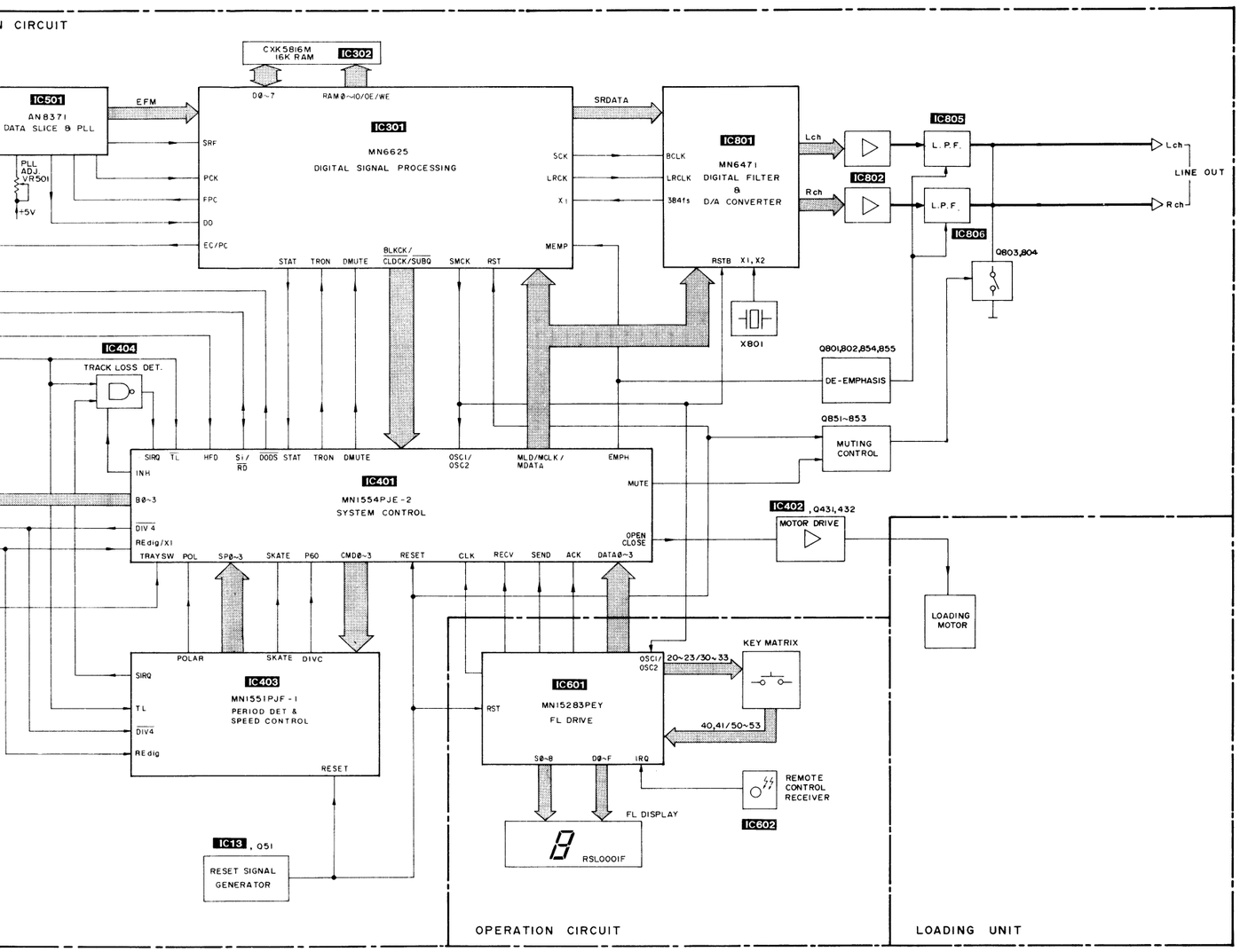

l.
for LAG network
rack jumping.
laser supply and

l devided by four.

signal (Active High)

4.2336MHz)
rison signal
CRC etc.

de control data

MCLK : Data clock for MDATA
SUBQ : Sub-code Q data
CLDCK : Data frame clock (7.35KHz)
BLKCK : Sub-code Q data block clock (75 Hz)
RST : Reset command (Active Low)
TRON : Tracking servo ON command (Active Low)
EC : Spindle motor drive signal
PC : Spindle motor ON command (Active Low)
SMCK : System clock (4.2336MHz)
OE : Read out enable
WE : Write enable
LRCK : L/R data discrimination clock (88.2KHz)
SRDATA : Serial data output (MSB first)
SCK : Serial bit clock (2.82MHz)
MEMP : Deemphasis command (Active High)

Note)
• ——→ Audio signal.

www.manualscenter.com

■ INTERNAL CONNECTION OF FL

• Grid connection diagram

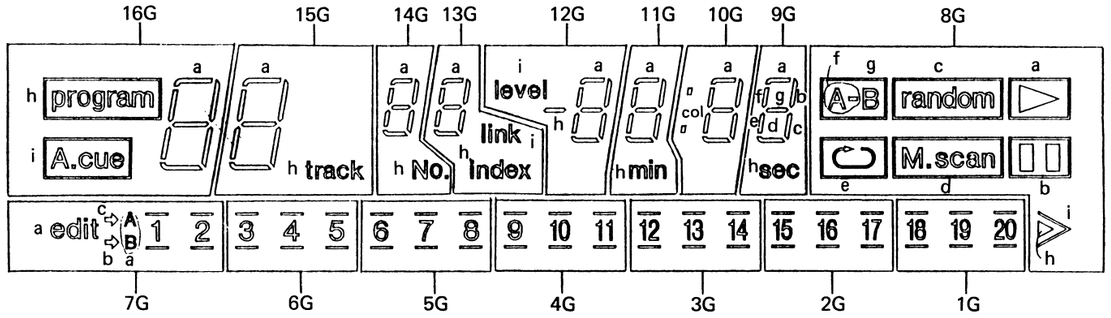

• Pin connection table

42	41	40	39	38	37	36	35	34	33	32	31	30	29	28	27	26	25	24	23	22	21	20	19	18	17	16	15	14	13	12	11	10	9	8	7	6	5	4	3	2	1
F2	F2	NP	a	b	c	d	NP	NP	NP	e	f	g	h	i	16G	15G	14G	13G	NP	NP	NP	NP	12G	11G	10G	9G	8G	7G	6G	5G	4G	NP	NP	NP	NP	3G	2G	1G	NP	F1	F1

• Anode connection table

	16G	15G	14G	13G	12G	11G	10G	9G	8G	7G	6G	5G	4G	3G	2G	1G
a	a	a	a	a	a	a	a	a	▶	edit A/B	3	6	9	12	15	18
b	b	b	b	b	b	b	b	b	❚❚	(down)	3	6	9	12	15	18
c	c	c	c	c	c	c	c	c	random	(up)	3	6	9	12	15	18
d	d	d	d	d	d	d	d	d	M.scan	1	4	7	10	13	16	19
e	e	e	e	e	e	e	e	e	↻	(down) 1	4	7	10	13	16	19
f	f	f	f	f	f	f	f	f	A–	(up) 1	4	7	10	13	16	19
g	g	g	g	g	g	g	g	g	B	2	5	8	11	14	17	20
h	program	track	No.	index	—	min	col	sec	▶	(down) 2	5	8	11	14	17	20
i	A.cue	-	-	link	level	·	-	-	>	(up) 2	5	8	11	14	17	20

■ SCHEMATIC DIAGRAM

(Parts list on pages 41 ~ 46.)

(This schematic diagram may be modified at any time with development of new technology.)

Notes:

- **S1** : Power switch in "**on**" position.
- **S601** : Disc holder open/close (⏏ open/close) switch.
- **S602, 603** : Skip (⏮ skip/skip ⏭) switches.
  S602: ⏮ (R), S603: ⏭ (F)
- **S604** : Stop (⏸ stop) switch.
- **S605** : Pause (■ pause) switch.
- **S606** : Play (▶ play) switch.
- **S619** : Edit tape length (tape length) switch.
- **S620** : Tape-side (side A/B) switch.
- **S621** : Disc link (disc link) switch.
- **S622** : Time mode select (time mode) switch.
- **S623** : Programmed-play (program) switch.
- **S624** : Clear (clear) switch.
- **S625** : Recall (recall) switch.
- **S626** : Repeat (repeat) switch.
- **S627** : Auto cue (auto cue) switch.
- **S628** : Random play (random) switch.
- **S629** : Music scan (music scan) switch.
- **S630, 631** : Search (◀◀ search ▶▶) switches.
  S630: ◀◀ (R), S631: ▶▶ (F)
- **S1001** : Tray (open/close) switch.

- The voltage value and waveforms are the reference voltage of this unit measured by DC electronic voltmeter (high impedance) and oscilloscope on the basis of chassis.
  Accordingly, there may arise some error in voltage values and waveforms depending upon the internal impedance of the tester or the measuring unit.
  *The parenthesized are the values of voltage generated during playing (Test disc 1kHz, L+R, 0dB), others are voltage values in stop mode.
- Important safety notice:
  Components identified by ⚠ mark have special characteristics important for safety. When replacing any of these components, use only manufacturer's specified parts.
- ─< >─/--< >--: Positive voltage lines and negative voltage lines.
  ▒▒▒▒ : Audio signal lines.

Caution!

IC and LSI are sensitive to static electricity.
Secondary trouble can be prevented by taking care during repair.

- Cover the parts boxes made of plastics with aluminum foil.
- Ground the soldering iron.
- Put a conductive mat on the work table.
- Do not touch the pins of IC or LSI with fingers directly.

www.manualscenter.com

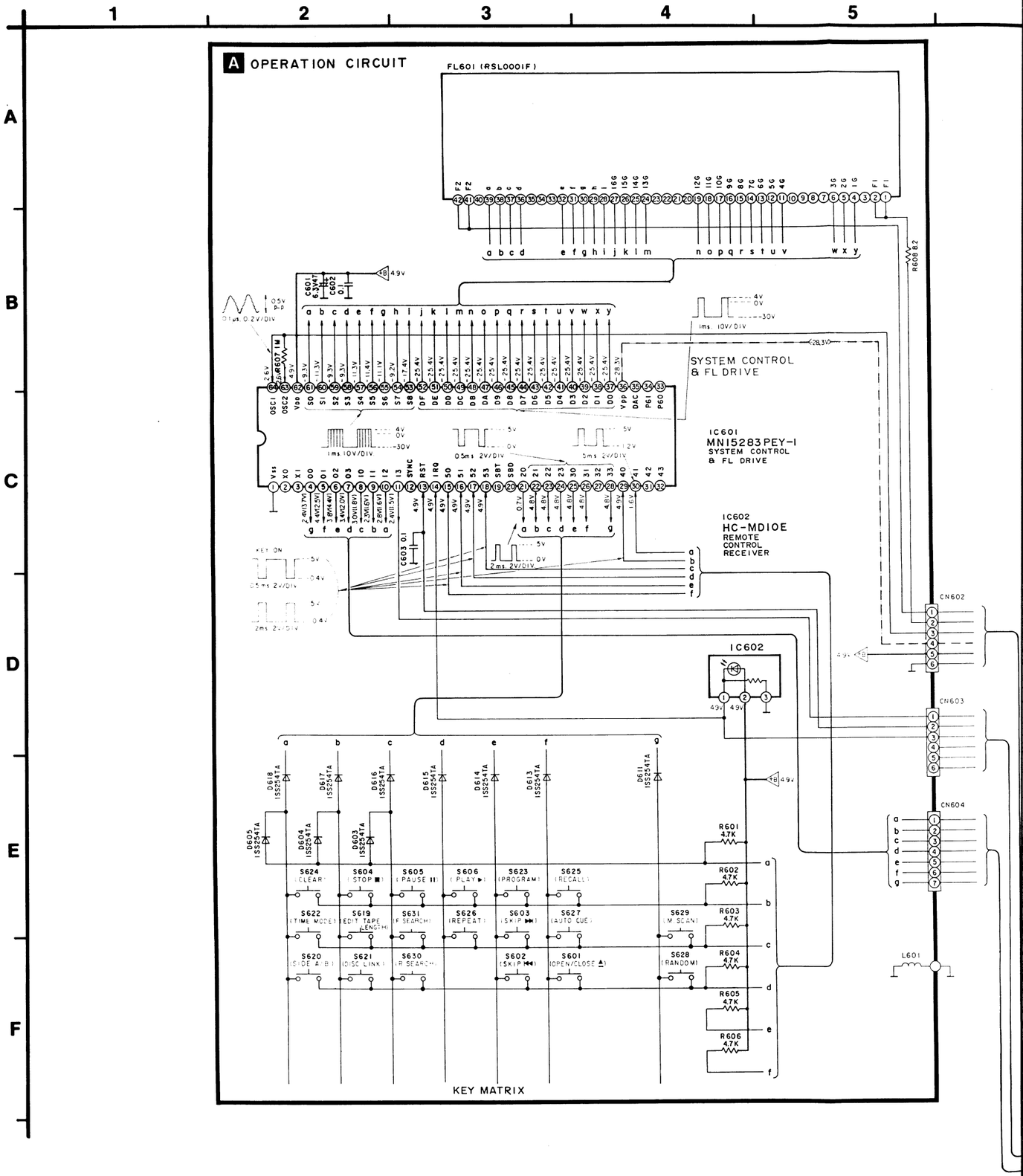

5 6 7 8 9 10 11 12 13 14

B SERVO CIRCUIT

OPTICAL PICKUP
FOCUS COIL
RADIAL MOTOR
LASER
0.047
1K
1μH

Q6502
BC338
LASER AMP
Laser power adj.
R3522 18
R6023 2
C2520 220P
R3524 100
R3521 220
VR3520 4K7
C2515 0.001
C2514 0.047
C2504 470P
R3502 100K
R3501 4K7
C2501 0.022
C2510 0.01
C2505 10μF
C2507 10μF
C2542 0.022
C2544 16V220

IC6504 (1/2)
R3567 82K
C2561 0.047
R3562 120K
R3566 22
R3565 22
C2563 0
C2565 0.0012
C2562 0.033
R3564 160K
C2560 0.0047
R3561 150K
R3560 11K

FOCUS NORMALIZING CIRCUIT
LASER SUPPLY
GAIN CONTROL
H F AMP LIFIER
IC6501
H F DETECTOR
STARTING CIRCUIT
EQUALIZER

R3563 56K
C2507 0.0024
C2506 0
R3568 100K
R3509 56K
R3508 56K
R3505 56K
C2513 0
C2511 0.01
C2509 470
R3507 2K2
R3506 100
C2503 0.022
C2508 0.047
C2525 0.01
R3510 10K

Q6507
BC848C
DETECTOR
Focus offset adj.
VR3569 22K
R3554 6K8
Q6507
R3550 2K2
C2532 16V33
C2537 0.22
C2538 0.22
R3535 12K
C2536 0.033
C2535 0.033
R3533 5K1
R3555 22K
R3534 220K
C2534 0.33
R3552 820
C2550 0.015
R3554 2K

IC6504 (1/2)
D6505 HZ7C2
D6506 HZ7C2
R3542 82
C2640 068
C2545 0.1
R3540 47
R3543 6K8

IC6504
TCA0372DP2
FOCUS/RADIAL DRIVE

RADout REin REfag Lag Lead Vref AGC RDAC offset in offset out CLPF CHPF Re1 Re2
VREF
RAD MIRROR
OSC
IC6503
U/I DAC ROM
GND Vext− Vext+ B0 B1 B2 B3 REdig DIV4 Rosc Rwob Cosc2 Cosc1 Vp
R3530 47K
R3531 15K
C2531 0.0082
C2530 0.0082
C2546 0.1
C2547 0.022

IC6501
TDA8808T/C3
PHOTO DIODE
SIGNAL PROCESSOR

LPF Vext Dodis TL PLLH FOC START Bgc Baq SlRD Sc DET HFout Vp GCHF
FE FElag LO LM GCLF Re2 Re1 D2 D1 D3 D4 HFin GND DEC

R3545 1
R3504 4E7
R3503 4E7
R3544 1
C2543 10μF
C2541 0.022

32 TURNTABLE MOTOR
M
SI001

IC6503
TDA8809T/C2
RADIAL ERROR
SIGNAL PROCESSOR

CN602
CN603
CN604
IC602
R601 4.7K
R602 4.7K
R603 4.7K
R604 4.7K
R605 4.7K
R606 4.7K
L601

SYSTEM CONTROL & FL DRIVE
IC601
MN15283PEY-I
SYSTEM CONTROL & FL DRIVE
IC602
HC-MD10E
REMOTE CONTROL RECEIVER

www.manualscenter.com

C

MAIN CIRCUIT

LOADING MOTOR DRIVE

DATA SLICE AND PLL

IC501 AN8371S DATA SLICE & PLL

IC302 SVICXK5816M 16K RAM

IC301 MN6625 DIGITAL SIGNAL PROCESSING

IC401 MN1554PJE-2 SYSTEM CONTROL

IC403 MN1551PJF-1 PERIOD DET. & SPEED CONTROL

IC404 MN74HC00S NAND GATE

IC13 BA4558FT1 RESET

Q351 DTA124EST MOTOR CONTROL

Q352,431 2SD1862QRTV6 MOTOR DRIVE

Q353,432 2SB1240QRTV6 MOTOR DRIVE

IC402 BA4558FT1 MOTOR DRIVE

Q851 DTA124EST MUTING CONT.

TURNTABLE MOTOR DRIVE

PERIOD DET & SPEED CONTROL

RESET SIGNAL GENERATOR

SYSTEM CONTROL

DIGITAL SIGNAL PROCESSING

IC11 LM2940T REGULATOR

Q16 2SB1238QSTV6 REGULATOR

Q13,15 2SB1240QRTV6 REGULATOR

www.manualscenter.com

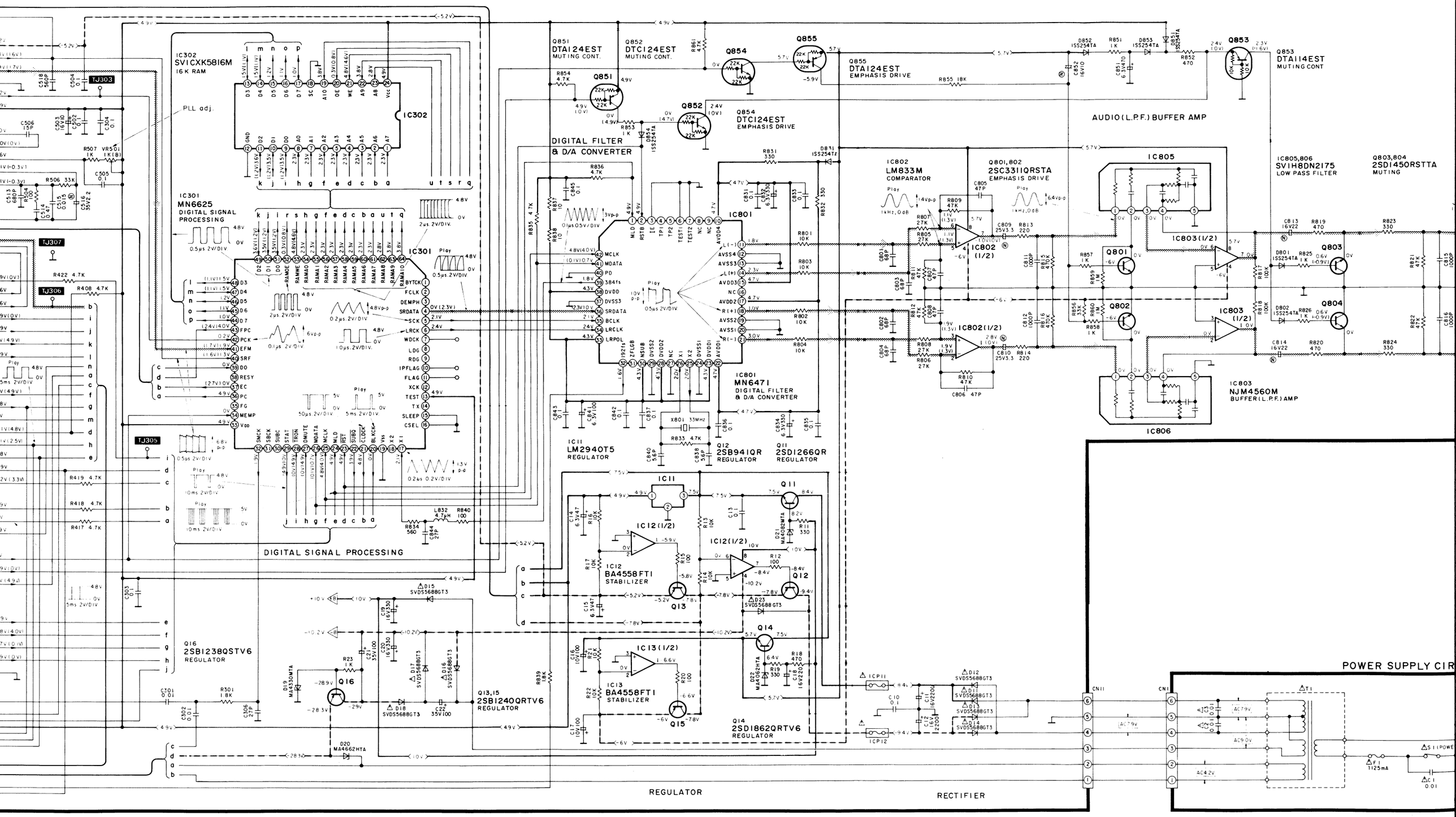

www.manualscenter.com

27 28 29 30 31 32 33 34 35 36

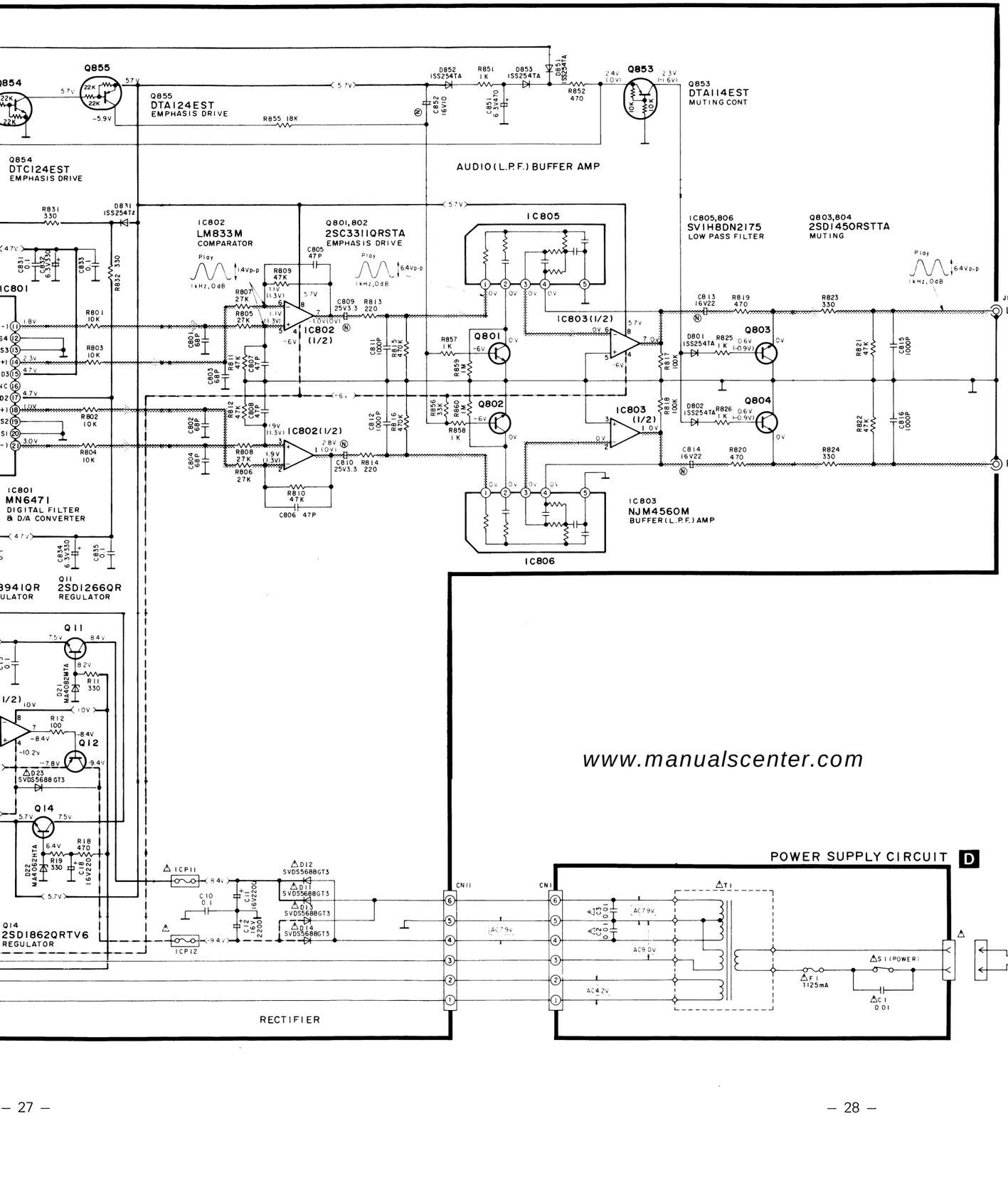

www.manualscenter.com

- Power supply circuit for [EK] area.

For (EK) area.

E POWER SUPPLY CIRCUIT

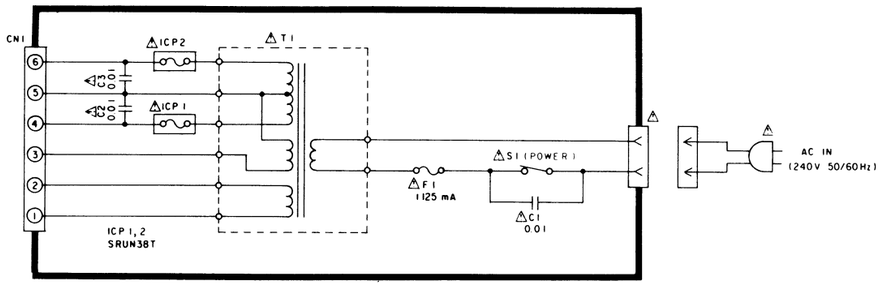

■ TERMINAL GUIDE OF IC's, TRANSISTORS AND DIODES

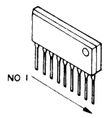

SVIH8DN2175	5 Pin

LM2940T5

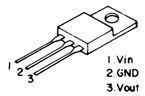

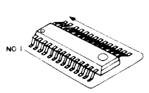

LM833M	8 Pin	AN8371S	24 Pin
NJM4560M		SVICXK5816M	24 Pin
BA4558FT1		4822 209 73234 (TDA8808T)	28 Pin
MN74HC00S	14 Pin	4822 209 73235 (TDA8809T)	

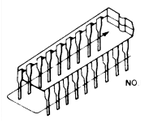

MN15283PEY-1	64 Pin
MN1551PJF-1	28 Pin
MN1554PJE-2	64 Pin
4822 209 72587 (TCA0372)	8 Pin

2SB941QR, 2SD1266QR

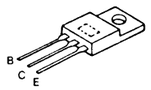

MN6471	42 Pin
MN6625	64 Pin

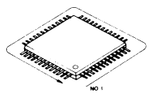

SRUF38T, SRUN15

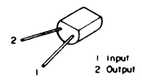

4822 130 44121 (BC338)

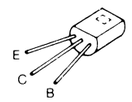

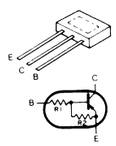

DTA124EST, DTA114EST

2SD1450R, 2SC3311A-Q, 2SA1309

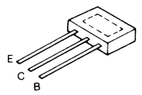

DTC124EST

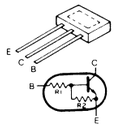

2SB1238QSTV6, 2SD1862QRTV6, 2SB1240-P

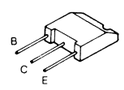

1SS254, SVDS5688GT3

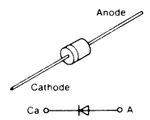

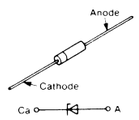

MA4330M, MA4062H, MA4033M, MA4051M, MA4082M

5322 130 42136 (BC848C)

■ WIRING CONNECTION DIAGRAM

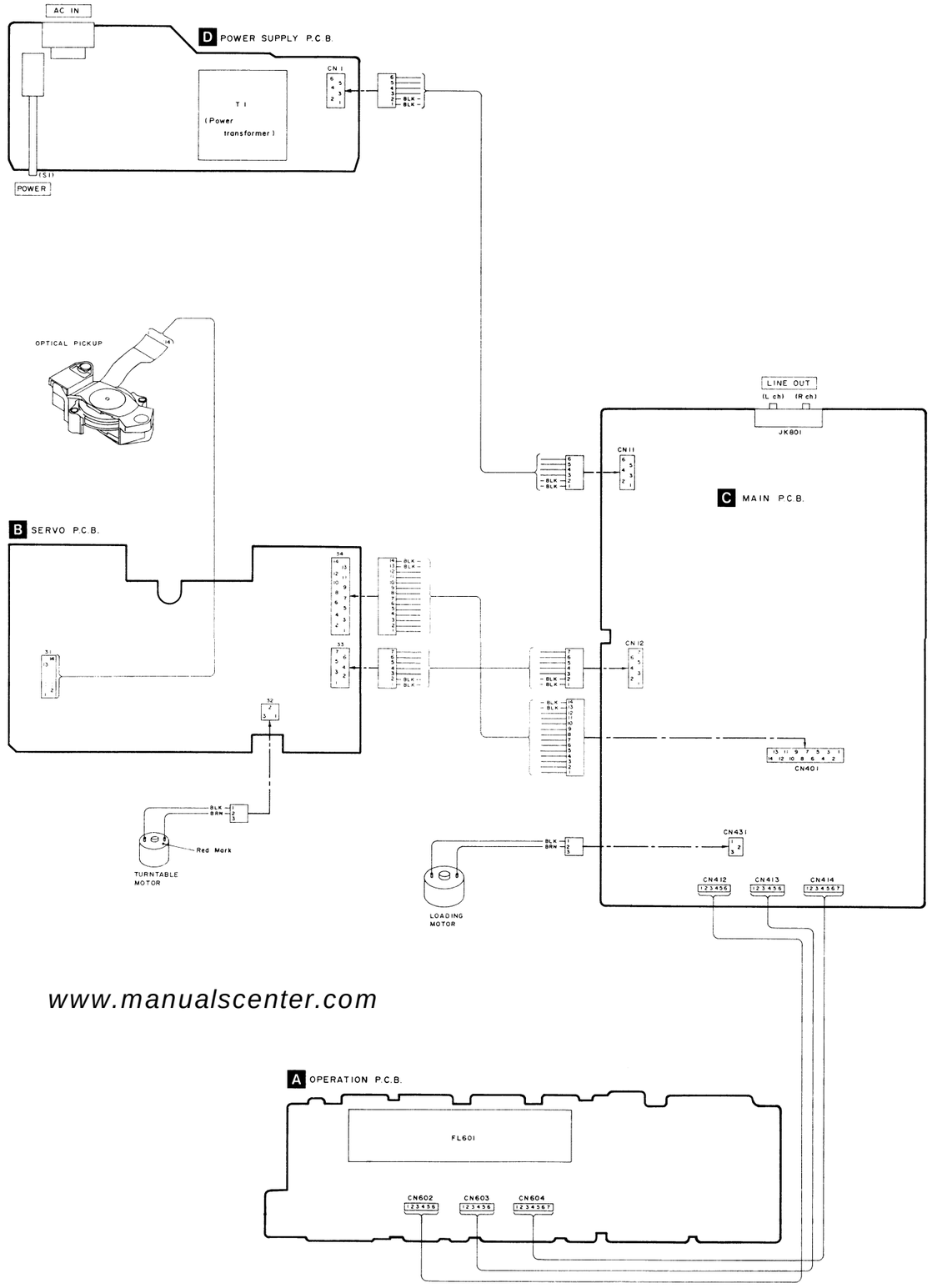

www.manualscenter.com

■ PRINTED CIRCUIT BOARDS

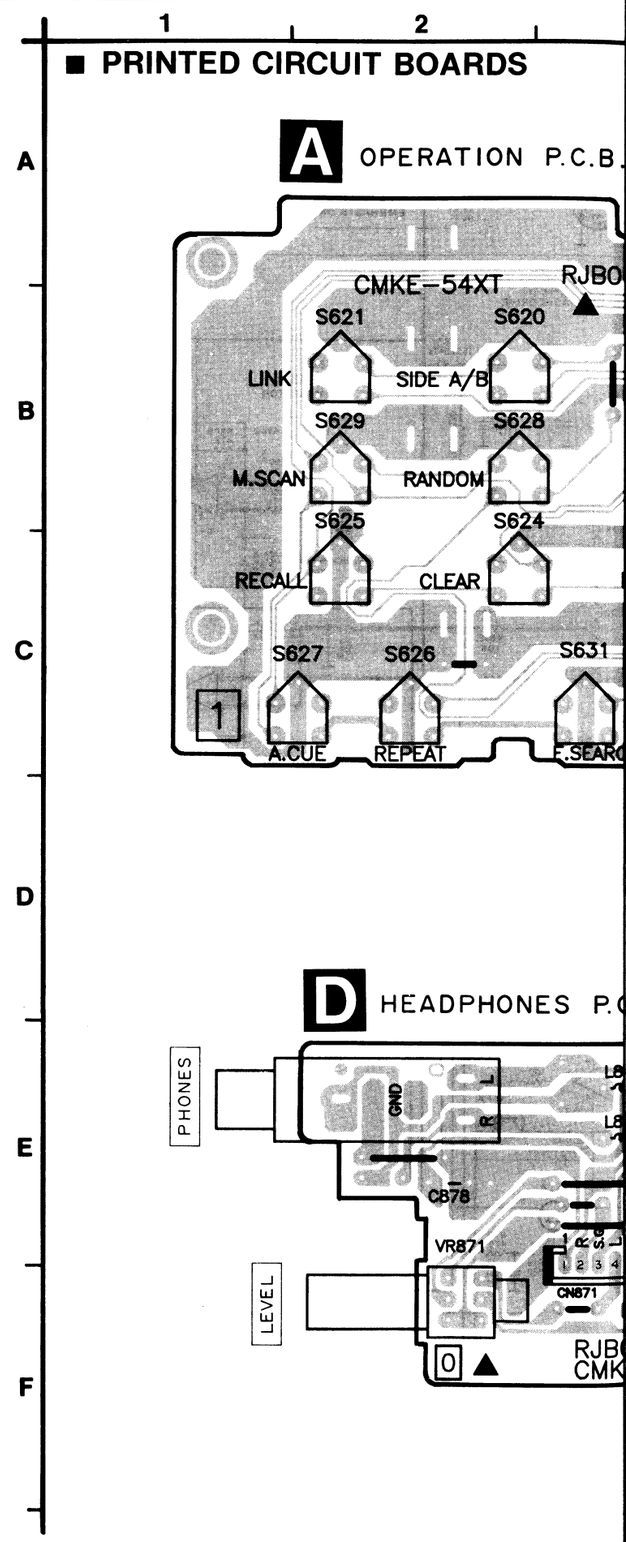

■ PRINTED CIRCUIT BOARDS

A OPERATION P.C.B.

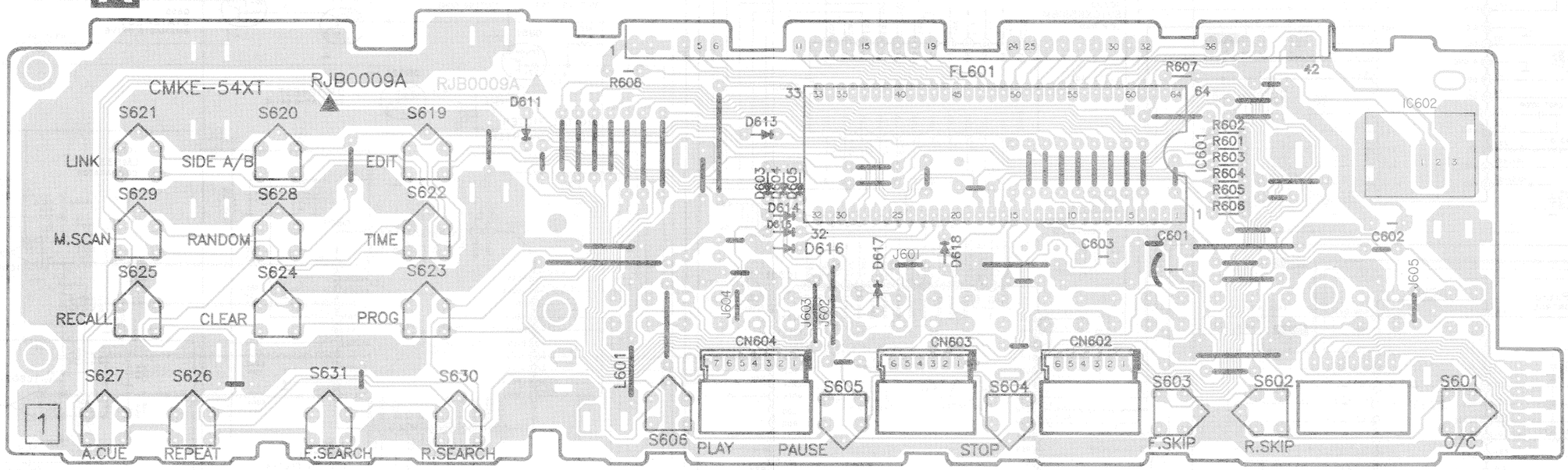

www.manualscenter.com

D HEADPHONES P.C.B.

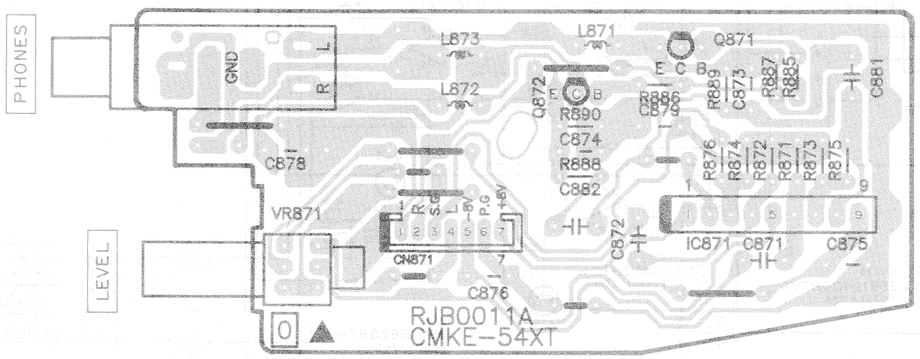

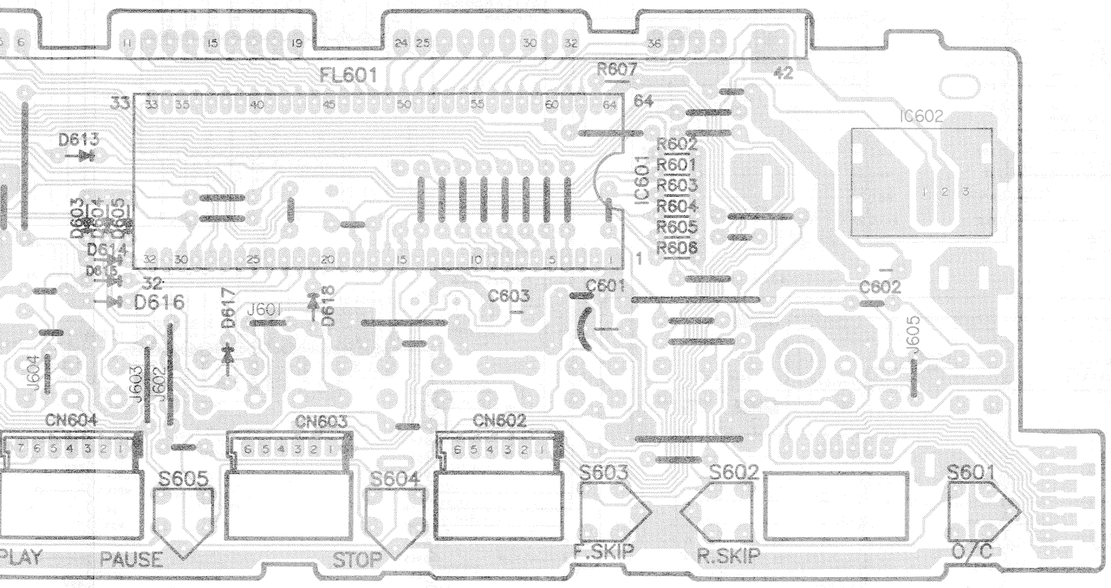

www.manualscenter.com

B SERVO P.C.B.

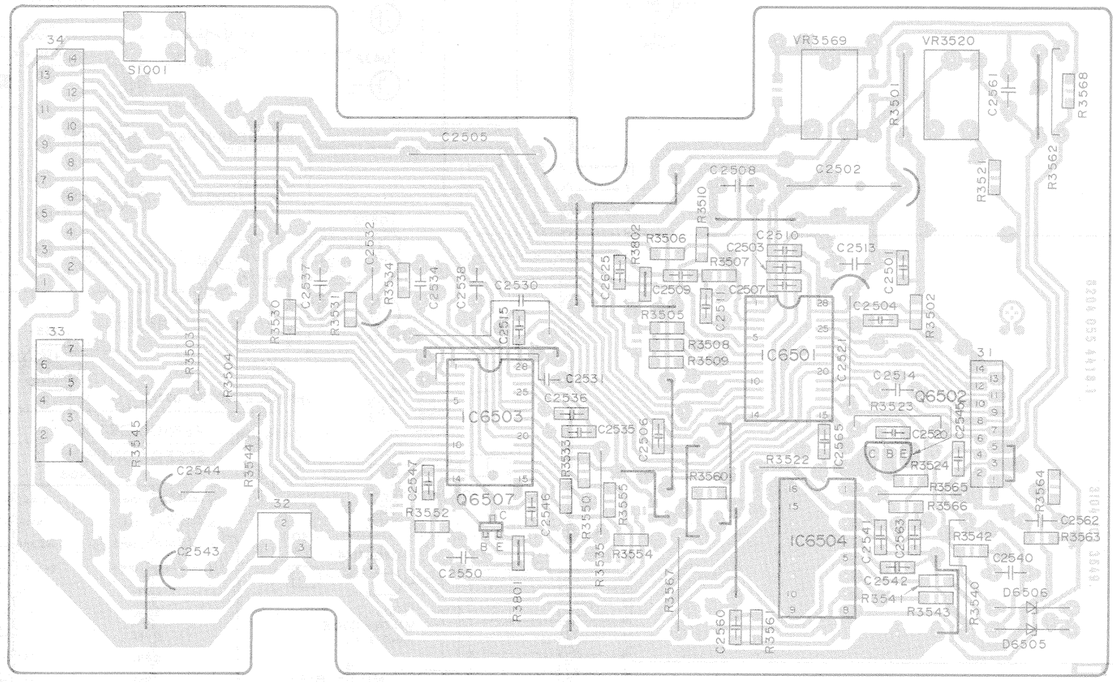

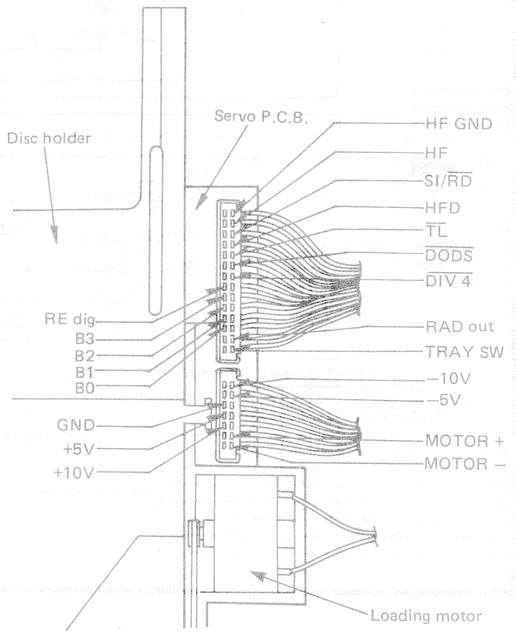

Note: Use connector pins to check servo circuit voltages and waveforms.

C MAIN P.C.B.

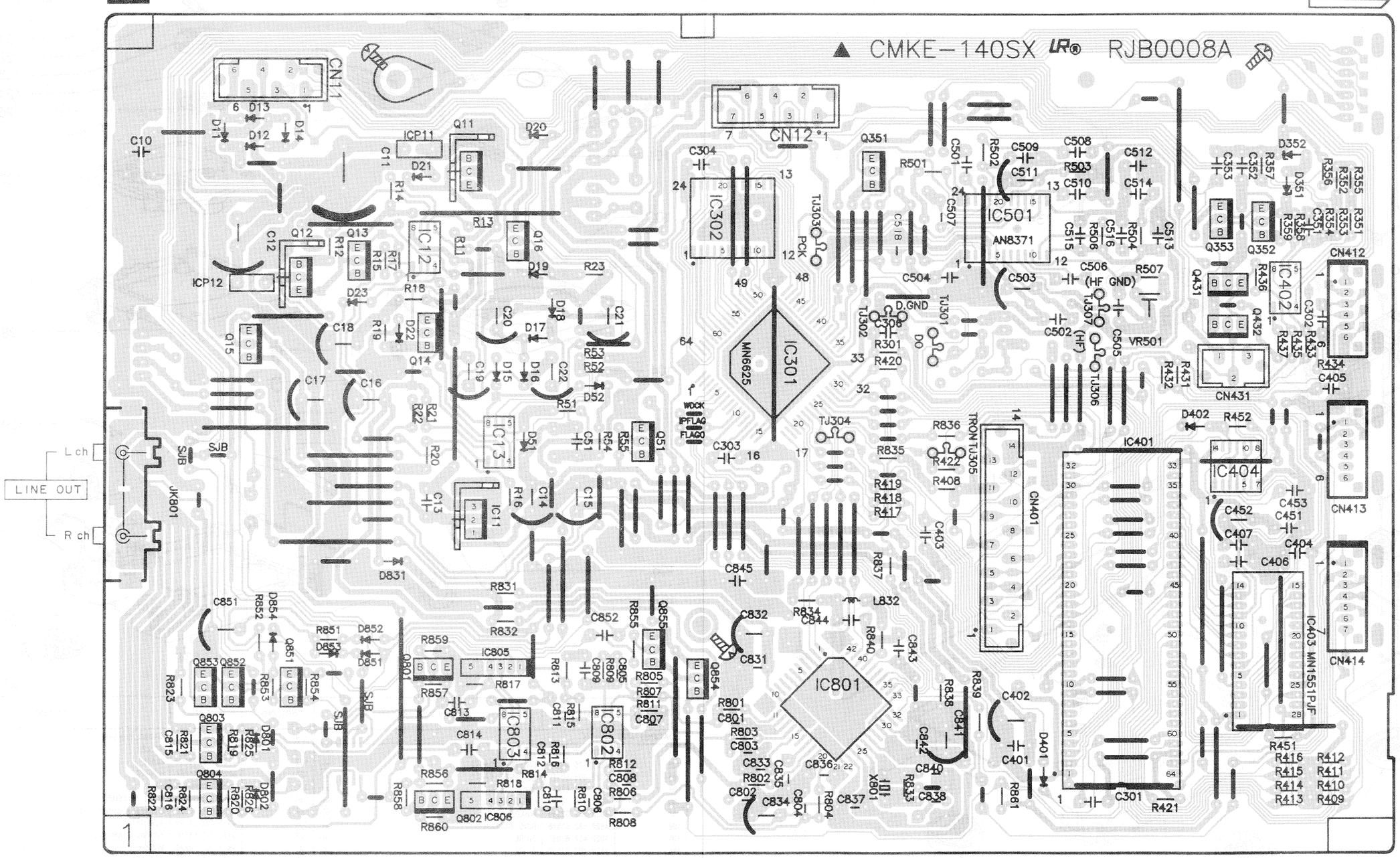

www.manualscenter.com

19 20 21 22 23 24 25 26 27 28

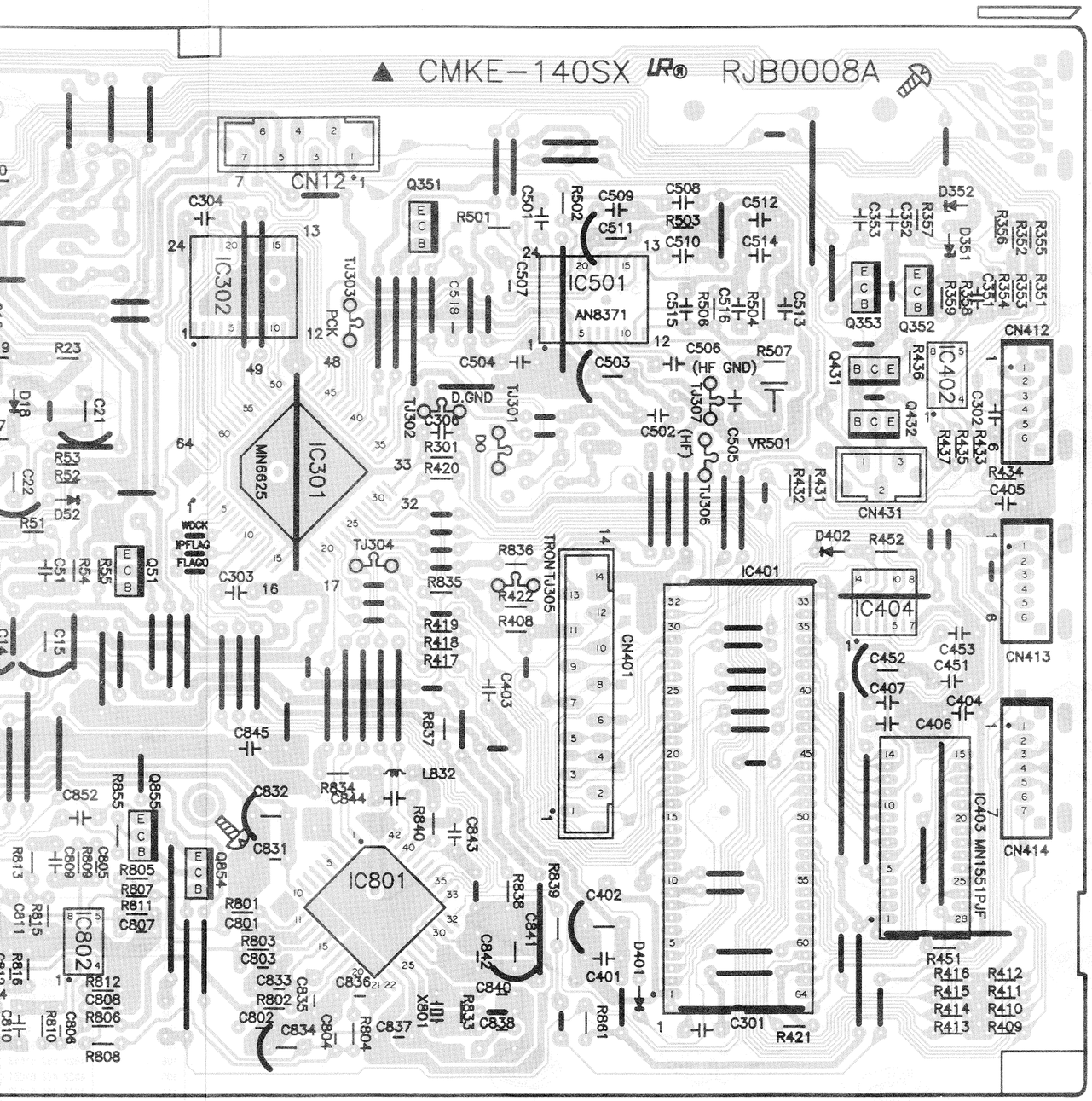

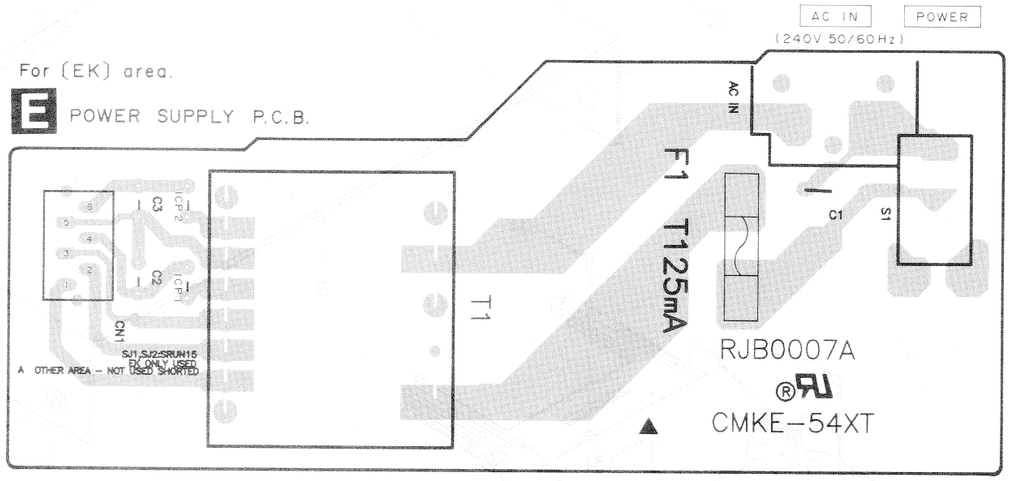

www.manualscenter.com

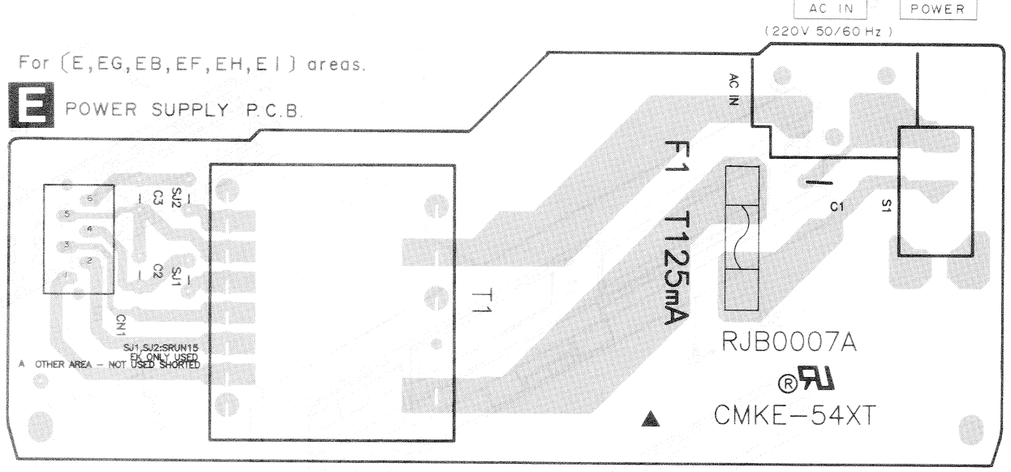

SL-P202A SL-P202A

■ EXPLODED VIEW

- Cabinet and chassis parts

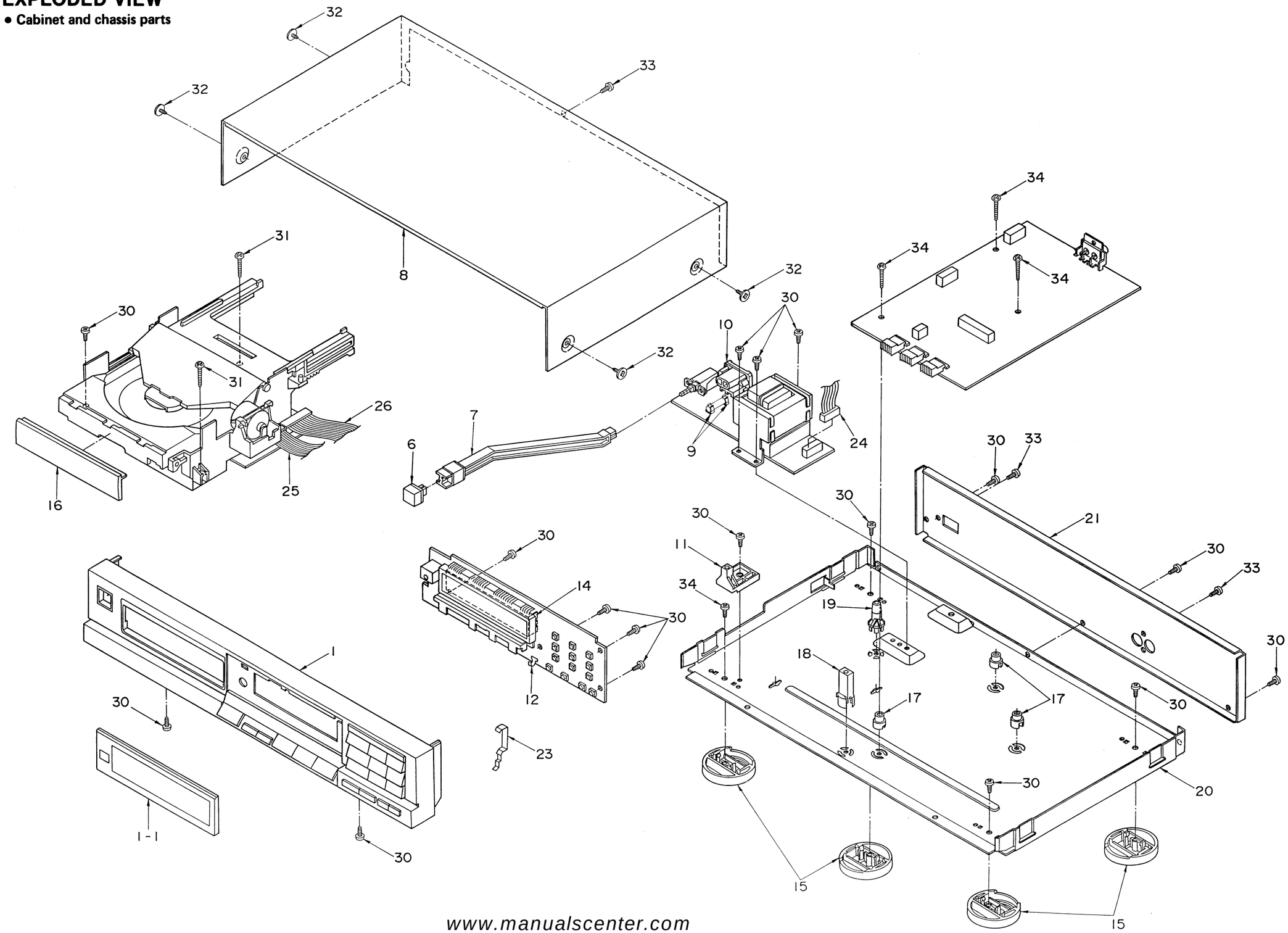

- Loading unit part

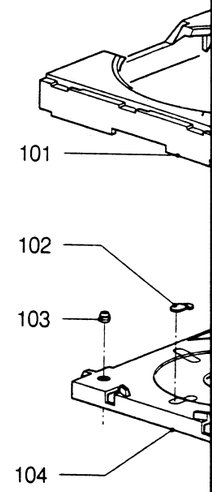

Ref. No.	Part No.
LOADING UNIT PARTS	
101	4822 444 50603
102	4822 325 50176
103	4822 325 50177
104	4822 466 92251
106	4822 358 10115
107	4822 522 32359
108	4822 532 51518
109	4822 402 61081
111	4822 402 61132
112	4822 528 90638
113	4822 492 51902
114	4822 466 61587
116	4822 402 61107
117	4822 492 63659
118	4822 444 60568

www.manualscenter.com

10 11 12 13 14

Loading unit part

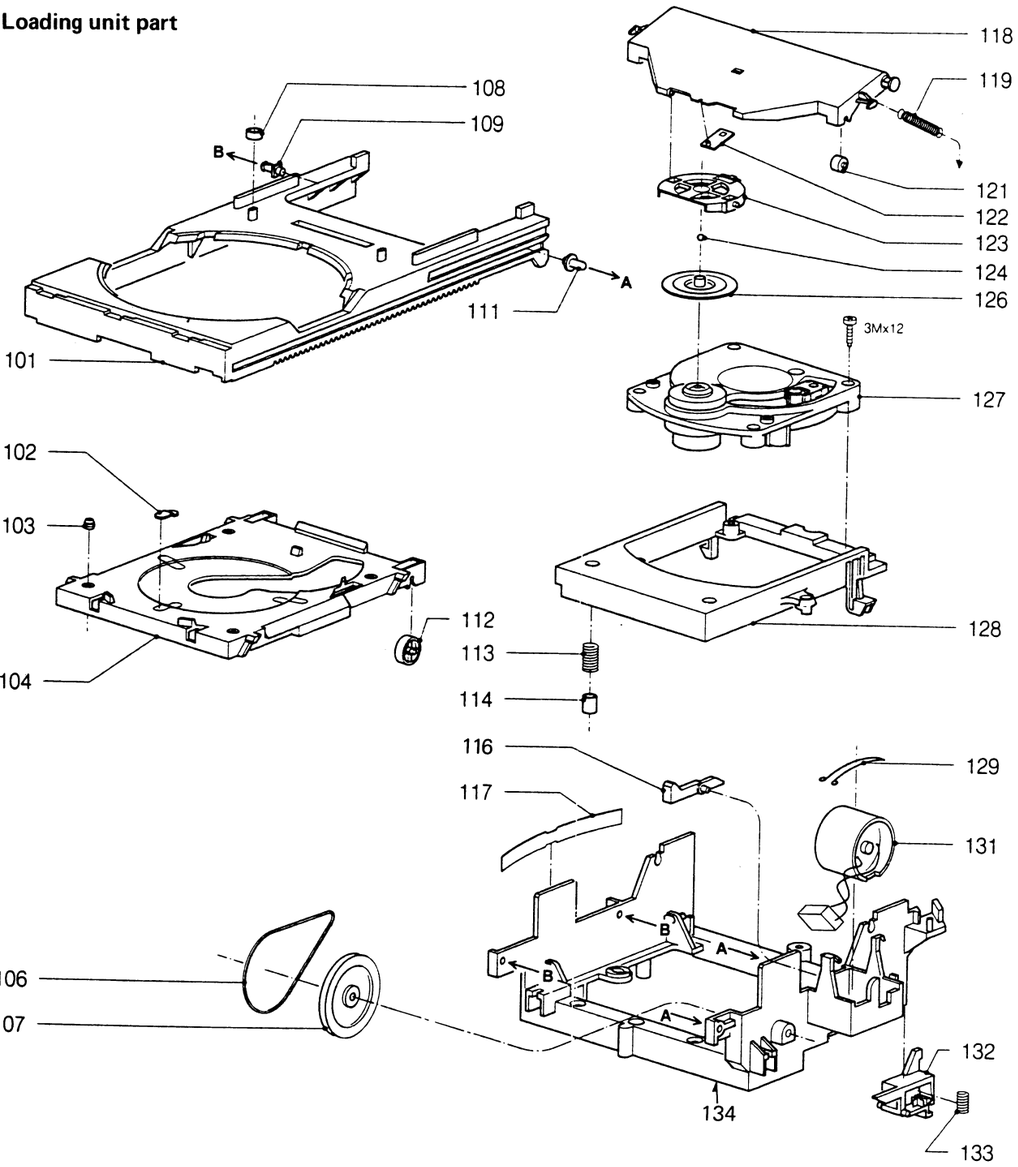

Ref. No.	Part No.	Description	Ref. No.	Part No.	Description
ADING UNIT PARTS			119	4822 492 32883	SPRING, TENSION MB
	4822 444 50603	TRAY MB	121	4822 528 90639	ROLLER MB
	4822 325 50176	GROMMET, CABLE MB	122	4822 466 92257	PLATE MB
	4822 325 50177	GROMMET, CABLE MB	123	4822 402 61207	HOLDER MB
	4822 466 92251	PLATE MB	124	4822 520 40177	BALL MB
	4822 358 10115	BELT, DRIVING MB	126	4822 530 80503	RING, PRESSURE MB
	4822 522 32359	WHEEL, GEAR MB	127	4822 691 30209	Optical pickup unit MB
	4822 532 51518	RING, RUBBER MB	128	4822 402 61196	SUPPORT MB
	4822 402 61081	GUIDE MB	129	4822 492 63746	SPRING, CLAMPING MB
	4822 402 61132	GUIDE MB	131	4822 361 20998	MOTOR MB
	4822 528 90638	ROLLER MB	132	4822 402 50244	BRACKET MB
	4822 492 51902	SPRING, COMPRES. MB	133	4822 492 51935	SPRING, COMPRES. MB
	4822 466 61587	FOAM MB			
	4822 402 61107	LEVER MB			
	4822 492 63659	SPRING, BLADE MB			
	4822 444 60568	LID MB	134	4822 464 50715	CHASSIS MB

■ REPLACEMENT PARTS LIST

Notes : * Important safety notice :
Components identified by ⚠ mark have special characteristics important for safety. When replacing any of these components use only manufacturer's specified parts.
* Bracketed indications in Remarks columns specify the area. (Refer to the first page for area.)
Parts without these indications can be used for all areas.
* "(K)" mark parts are used for black type only.
* "(S)" mark parts are used for silver type only.
Parts other than "(K)" and "(S)" marked are used for all color types
* Warning : This product uses a laser diode. Refer to caution statements on page 3.
* ACHTUNG :
Die lasereinheit nicht zerlegen.
Die lasereinheit darf nur gegen eine vom hersteller spezifizierte einheit ausgetauscht werden.
* MB indicates parts that are supplied by **MBV.**

Ref. No.	Part No.	Part Name & Description	Remarks
		CABINET AND CHASSIS	
1	SYYD202KEE	FRONT PANEL ASS'Y	(K)
1	SYYD202SEE	FRONT PANEL ASS'y	(S)
1-1	SGUD225	ORNAMENT	
6	SBC666-1	BUTTON , POWER	(K)
6	SBC666	BUTTON , POWER	(S)
7	SUBD15-1	ROD	
8	RKM0011-K	CABINET MB	(K)
8	RKM0011-S	CABINET MB	(S)
9	SJT390	HOLDER, FUSE	
10	SJS9236	AC SOCKET	⚠
11	RHR0022	HOLDER MB	
12	SUSD144	PLATE, EARTH	
14	SUWD139	BRACKET	
15	SKLD8-E	INSULATER	
16	RGK0015	ORNAMENT	(K)
16	RGK0015A	ORNAMENT	(S)
17	SHE185-2	BRACKET	
18	RMR0021	BRACKET MB	
19	RMR0020	BRACKET MB	
20	SKULP212A-KE	CHASSIS MB	
21	SGPLP202A-KE	REAR PANEL MB	<E>
21	SGPLP202A-KB	REAR PANEL MB	<EB, EH, EF, EI>
21	SGPLP202A-KK	REAR PANEL MB	<EK>
21	SGPLP202A-KG	REAR PANEL MB	<EG>
23	RMC0013	BRACKET MB	(S ONLY)
24	REX0006	CONNECTOR ASS'Y MB	
25	REX0007	CONNECTOR ASS'Y MB	
26	REX0008	CONNECTOR ASS'Y MB	
30	XTB3+8JFZ	SCREW	
31	XTV3+35JFZ	SCREW	
32	SNE2129-1	SCREW	(K)
32	SNE2129	SCREW	(S)
33	XTBS3+8JFZ1	SCREW	
34	XTB3+16JFZ	SCREW	

Ref. No.	Part No.	Part Name & Description	Remarks
		PACKING MATERIAL	
P1	RPG0012	CARTON BOX MB	(K)
P1	RPG0078	CARTON BOX MB	(S)
P2	RPN0045A	PAD (FRONT) MB	
P3	RPN0045B	PAD (BACK) MB	
P4	XZB60X60A01	PROTECTION BAG	
		ACCESSORIES	
A1	RQT0010E	INSTRUCTION BOOK MB	<E, EH, EB>
A1	RQT0010G	INSTRUCTION BOOK MB	<E, EH, EB, EF>
A1	RQT0010D	INSTRUCTION BOOK MB	<EG>
A1	RQT0010B	INSTRUCTION BOOK MB	<EK>
A1	RQT0010V	INSTRUCTION BOOK MB	<EI>
A2	XZB23X35C03	PROTECTION BAG	
A3	SJA87	POWER CORD	<E, EH, EG, EB, EF, EI>⚠
A3	SJA193	POWER CORD	<EK> ⚠
A4	SJP2249-3	OUTPUT CORD	
A5	XZB26X17C03	PROTECTIPN BAG	
A6	RMR0024	LOCK SHAFT MB	
A7	RQCA0002	CAUTION LAVEL MB	

www.manualscenter.com

D

Ref. No.	Part No.	Part Name & Description	Remarks
		INTEGRATED CIRCUITS	
IC11	LM2940T5	IC, REGULATOR	
IC12	BA4558FT1	IC, RESET	
IC13	BA4558FT1	IC, RESET	
IC301	MN6625	IC, SIGNAL PROCESSING	
IC302	SVICXK5816M	IC, 16K RAM	
IC401	MN1554PJE-2	IC, SESTEM CONTROL	
IC402	BA4558FT1	IC, MOTOR DRIVE	
IC403	MN1551PJF-1	IC, REMOTE CONTROL	
IC404	MN74HC00S	IC, NAND GATE	
IC501	AN8371S	IC, DATA SLICE&PLL	
IC601	MN15283PEY-1	IC, SYSTEM CONTROL/FL	
IC602	HC-MD10E	IC, REMOTE CONTROL	
IC801	MN6471	IC, DF&D/A CONVERTER	
IC802	LM833M	IC, BUFFER AMP	
IC803	NJM4560M	IC, BUFFER AMP	
IC805	SVIH8DN2175	IC, L, P, F	
IC806	SVIH8DN2175	IC, L, P, F	
ICP1	SRUN38T	IC, PROTECTOR	<EK>
ICP2	SRUN38T	IC, PROTECTOR	<EK>
ICP11	SRUN15T	IC, PROTECTOR	
ICP12	SRUN15T	IC, PROTECTOR	
		TRANSISTORS	
Q11	2SD1266QR	TRANSISTOR, REGULATOR	
Q12	2SB941QR	TRANSISTOR, REGULATOR	
Q13	2SB1240QRTV6	TRANSISTOR, REGULATOR	
Q14	2SD1862QRTV6	TRANSISTOR, REGULATOR	
Q15	2SB1240QRTV6	TRANSISTOR, REGULATOR	
Q16	2SB1238QSTV6	TRANSISTOR, REGULATOR	
Q51	DTC124EST	TRANSISTOR, RESET	
Q351	DTA124EST	TRANSISTOR, MOTOR CONTROL	
Q352	2SD1862QRTV6	TRANSISTOR, MOTOR DRIVE	
Q353	2SB1240QRTV6	TRANSISTOR, MOTOR DRIVE	
Q431	2SD1862QRTV6	TRANSISTOR, MOTOR DRIVE	
Q432	2SB1240QRTV6	TRANSISTOR, MOTOR DRIVE	
Q801	2SC3311QRSTA	TRANSISTOR, EMPHASIS DRIVE	
Q802	2SC3311QRSTA	TRANSISTOR, EMPHASIS DRIVE	
Q803	2SD1450RSTTA	TRANSISTOR, MUTING	
Q804	2SD1450RSTTA	TRANSISTOR, MUTING	
Q851	DTA124EST	TRANSISTOR, MUTING	
Q852	DTC124EST	TRANSISTOR, MUTING	
Q853	DTA114EST	TRANSISTOR, MUTING	

Ref. No.	Part No.	Part Name & Description	Remarks
Q854	DTC124EST	TRANSISTOR, EMPHASIS DRIVE	
Q855	DTA124EST	TRANSISTOR, EMPHASIS DRIVE	
		DIODES	
D11	SVDS5688GT3	DIODE	
D12	SVDS5688GT3	DIODE	
D13	SVDS5688GT3	DIODE	
D14	SVDS5688GT3	DIODE	
D15	SVDS5688GT3	DIODE	
D16	SVDS5688GT3	DIODE	
D17	SVDS5688GT3	DIODE	
D18	SVDS5688GT3	DIODE	
D19	MA4330MTA	DIODE	
D20	MA4062HTA	DIODE	
D21	MA4082MTA	DIODE	
D22	MA4062HTA	DIODE	
D23	SVDS5688GT3	DIODE	
D51	MA4033MTA	DIODE	
D52	1SS254TA	DIODE	
D351	MA4051MTA	DIODE	
D352	MA4051MTA	DIODE	
D401	1SS254TA	DIODE	
D402	1SS254TA	DIODE	
D603	1SS254TA	DIODE	
D604	1SS254TA	DIODE	
D605	1SS254TA	DIODE	
D611	1SS254TA	DIODE	
D613	1SS254TA	DIODE	
D614	1SS254TA	DIODE	
D615	1SS254TA	DIODE	
D616	1SS254TA	DIODE	
D617	1SS254TA	DIODE	
D618	1SS254TA	DIODE	
D801	1SS254TA	DIODE	
D802	1SS254TA	DIODE	
D831	1SS254TA	DIODE	
D851	1SS254TA	DIODE	
D852	1SS254TA	DIODE	
D853	1SS254TA	DIODE	
D854	1SS254TA	DIODE	
		VARIABLE RESISTORS	
VR501	EVND8AA02B13	V. RESISTOR	

www.manualscenter.com

D

Ref. No.	Part No.	Part Name & Description	Remarks
		COILS	
L601	VLP0053	COIL	
L832	ELEPK4R7KA	COIL	
		TRANSFORMERS	
T1	RTP1V4E001-J	TRANSFORMER MB	<E, EG, EB, EH, EF, EI>⚠
T1	RTP1V4B002-J	TRANSFORMER MB	<EK> ⚠
		OSCILLATORS	
X801	SVQ49U338S	OSCILLATOR	
		DISPLAY TUBE	
FL601	RSL0001F	DISPLAY TUBE	
		SWITCHS	
S1	ESB8249V	SW, POWER	⚠
S601	EVQQS705G	SW, OPEN/CLOSE	
S602	EVQQS705G	SW, SKIP	
S603	EVQQS705G	SW, SKIP	
S604	EVQQS705G	SW, STOP	
S605	EVQQS705G	SW, PAUSE	
S606	EVQQS705G	SW, PLAY	
S619	EVQQS705G	SW, EDIT	
S620	EVQQS705G	SW, SIDE A/B	
S621	EVQQS705G	SW, DISC LINC	
S622	EVQQS705G	SW, TIME MODE	
S623	EVQQS705G	SW, PROGRAM	
S624	EVQQS705G	SW, CLEAR	
S625	EVQQS705G	SW, RECALL	
S626	EVQQS705G	SW, REPEAT	
S627	EVQQS705G	SW, AUTO CUE	
S628	EVQQS705G	SW, RANDAM	
S629	EVQQS705G	SW, M. SCAN	
S630	EVQQS705G	SW, F. SEARCH	
S631	EVQQS705G	SW, F. SEARCH	
		CONNECTORS	
CN1	RJT001H006	CONNECTOR, (6P) MB	
CN11	RJT001H006	CONNECTOR, (6P) MB	
CN12	RJT001H007	CONNECTOR, (7P) MB	
CN401	RJT001H014	CONNECTOR, (14P) MB	
CN412	SJS50680WL	CONNECTOR, (6P)	
CN413	SJS50680WL	CONNECTOR, (6P)	
CN414	SJS50780WL	CONNECTOR, (7P)	
CN431	RJT001H003	CONNECTOR, (3P) MB	
CN602	SJT30647WL	CONNECTOR, (6P)	
CN603	SJT30647WL	CONNECTOR, (6P)	
CN604	SJT30747WL	CONNECTOR, (7P)	
		JACK	
JK801	SJFD4	JACK, LINE OUT	
		FUSE	
F1	XBA2C012TB0	125mA, 250V	⚠

Ref. No.	Part No.	Description
INTEGRATED CIRCUITS		
IC6501	4822 209 73234	I.C, PHOTO DIODE SIGNAL PROCESSOR MB
IC6503	4822 209 73235	I.C, RADIAL ERROR SIGNAL PROCESSOR MB
IC6504	4822 209 72587	I.C, FOCUS/RADIAL DRIVE MB
TRANSISTORS		
Q6502	4822 130 44121	TRANSISTOR MB
Q6507	5322 130 42136	TRANSISTOR MB
DIODES		
D6505	4822 130 81101	DIODE MB
D6506	4822 130 81101	DIODE MB
VARIABLE RESISTORS		
VR3520	4822 101 10685	V.R, LASER POWER ADJ. MB
VR3569	4822 100 20522	V.R, FOCUS OFFSET ADJ. MB
SWITCH		
S1001	4822 276 12523	SW, TRAY MB

www.manualscenter.com

D

■ RESISTORS AND CAPACITORS

Notes : * Important safety notice :
Components identified by ⚠ mark have special characteristics important for safety. When replacing any of these components use only manufacturer's specified parts.
* Bracketed indications in Remarks columns specify the area. (Refer to the first page for area.)
Parts without these indications can be used for all areas.
* [MB] indicated parts that are supplied by **MBV.**

Numbering System For Resistors

Example:

ERD	25	F	J	102
Type	Wattage (1/4W)	Shape	Tolerance	Value (1KΩ)
ERX	2	AN	J	471
Type	Wattage (2W)	Shape	Tolerance	Value (470Ω)

Numbering System For Capacitors

Example:

ECKD	1H	102	Z	F
Type	Voltage (50V)	Value (0.001μF)	Tolerance	Unique
ECEA	50	M	330	
Type	Voltage (50V)	Characteristics	Value (33μF)	

- Capacity values are in microfarads (μF) unless specified otherwise, P = Pico-farads (pF) F = Farads (F).
- Resistance values are in ohms (Ω), unless specified otherwise, 1K = 1,000Ω, 1M = 1,000kΩ

Resistor Type		Wattage		Tolerance
ERD	: Carbon	10 : 1/8W	12 : 1/2W	J : ±5%
ERG	: Metal Oxide	14 : 1/4W	25 : 1/4W	F : ±1%
ERQ	: Fuse Type Metal	1A : 1W	18 : 1/8W	G : ±2%
ERX	: Metal Film	S2 : 1/4W	S1 : 1/2W	J : ±5%
ERD L	: Carbon (chip)	2F : 1/4W	50 : 1/2W	K : ±10%
ERO K	: Metal Film (chip)	2A : 2W	3A : 3W	M : ±20%
ERC	: Solid	6G : 1/10W	8G : 1/8W	
ERF	: Incombustible Box-Shaped			
ERM	: Wire-Wound			
RRJ	: Chip Resistor			
ERJ	: Chip Resistor			

Capacitor Type		Voltage		Tolerance
ECE	: Electrolytic	0J : 6.3V	1A : 10V	K : ±10%
ECCD	: Ceramic	1C : 16V	1E : 25V	M : ±20%
ECKD	: Ceramic Capacitor	1H : 50V	1V : 35V	Z : +80 % −20
ECQM	: Polyester	50 : 50V	05 : 50V	J : ±5%
ECQP	: Polypropylene	2H : 500V	2A : 100V	G : ±2%
ECG	: Ceramic	1 : 100V	1J : 63V	F : ±1%
ECEA N	: Non Polar Electrolytic	KC : 400V AC		C : ±0.25pF
QCU	: Ceramic (Chip Type)	KC : 125V AC (UL)		D : ±0.5pF
ECUX	: Ceramic (Chip Type)			
ECF	: Semiconductor			
EECW	: Liquid electrolyte double layer capacitor			

Ref. No.	Part No.	Part Name & Description	Remarks
		RESISTORS	
R11	ERDS2TJ331T	C. RESISTOR 1/4W 330	
R12	ERDS2TJ101T	C. RESISTOR 1/4W 100	
R13	ERDS2TJ103T	C. RESISTOR 1/4W 10K	
R14	ERDS2TJ103T	C. RESISTOR 1/4W 10K	
R15	ERDS2TJ101T	C. RESISTOR 1/4W 100	
R16	ERDS2TJ103T	C. RESISTOR 1/4W 10K	
R17	ERDS2TJ103T	C. RESISTOR 1/4W 10K	
R18	ERDS2TJ471T	C. RESISTOR 1/4W 470	
R19	ERDS2TJ331T	C. RESISTOR 1/4W 330	
R20	ERDS2TJ101T	C. RESISTOR 1/4W 100	
R21	ERDS2TJ103T	C. RESISTOR 1/4W 10K	
R22	ERDS2TJ103T	C. RESISTOR 1/4W 10K	
R23	ERDS2TJ102T	C. RESISTOR 1/4W 1K	
R51	ERDS2TJ102T	C. RESISTOR 1/4W 1K	
R52	ERDS2TJ393T	C. RESISTOR 1/4W 39K	
R53	ERDS2TJ153T	C. RESISTOR 1/4W 15K	
R54	ERDS2TJ101T	C. RESISTOR 1/4W 100	
R55	ERDS2TJ472T	C. RESISTOR 1/4W 4.7K	
R301	ERDS2TJ182T	C. RESISTOR 1/4W 1.8K	
R351	ERDS2TJ103T	C. RESISTOR 1/4W 10K	
R352	ERDS2TJ104T	C. RESISTOR 1/4W 100K	
R353	ERDS2TJ123T	C. RESISTOR 1/4W 12K	
R354	ERDS2TJ104T	C. RESISTOR 1/4W 100K	
R355	ERDS2TJ333T	C. RESISTOR 1/4W 33K	
R356	ERDS2TJ333T	C. RESISTOR 1/4W 33K	

Ref. No.	Part No.	Part Name & Description	Remarks
R357	ERD25FVJ6R8T	C. RESISTOR 1/4W 6.8	
R358	ERDS2TJ101T	C. RESISTOR 1/4W 100	
R359	ERDS2TJ101T	C. RESISTOR 1/4W 100	
R408	ERDS2TJ472T	C. RESISTOR 1/4W 4.7K	
R409	ERDS2TJ472T	C. RESISTOR 1/4W 4.7K	
R410	ERDS2TJ472T	C. RESISTOR 1/4W 4.7K	
R411	ERDS2TJ472T	C. RESISTOR 1/4W 4.7K	
R412	ERDS2TJ472T	C. RESISTOR 1/4W 4.7K	
R413	ERDS2TJ472T	C. RESISTOR 1/4W 4.7K	
R414	ERDS2TJ472T	C. RESISTOR 1/4W 4.7K	
R415	ERDS2TJ472T	C. RESISTOR 1/4W 4.7K	
R416	ERDS2TJ472T	C. RESISTOR 1/4W 4.7K	
R417	ERDS2TJ472T	C. RESISTOR 1/4W 4.7K	
R418	ERDS2TJ472T	C. RESISTOR 1/4W 4.7K	
R419	ERDS2TJ472T	C. RESISTOR 1/4W 4.7K	
R420	ERDS2TJ472T	C. RESISTOR 1/4W 4.7K	
R421	ERDS2TJ104T	C. RESISTOR 1/4W 100K	
R422	ERDS2TJ472T	C. RESISTOR 1/4W 4.7K	
R431	ERDS2TJ473T	C. RESISTOR 1/4W 47K	
R432	ERDS2TJ473T	C. RESISTOR 1/4W 47K	
R433	ERDS2TJ913T	C. RESISTOR 1/4W 91K	
R434	ERDS2TJ104T	C. RESISTOR 1/4W 100K	
R435	ERDS2TJ913T	C. RESISTOR 1/4W 91K	
R436	ERDS2TJ104T	C. RESISTOR 1/4W 100K	
R437	ERDS2TJ101T	C. RESISTOR 1/4W 100	
R451	ERDS2TJ104T	C. RESISTOR 1/4W 100K	
R452	ERDS2TJ103T	C. RESISTOR 1/4W 10K	
R501	ERDS2TJ224T	C. RESISTOR 1/4W 220K	

D www.manualscenter.com

Ref. No.	Part No.	Part Name & Description	Remarks
R502	ERDS2TJ562T	C. RESISTOR 1/4W 5.6K	
R503	ERDS2TJ474T	C. RESISTOR 1/4W 470K	
R504	ERDS2TJ101T	C. RESISTOR 1/4W 100	
R506	ERDS2TJ333T	C. RESISTOR 1/4W 33K	
R507	ERDS2TJ102T	C. RESISTOR 1/4W 1K	
R601	ERDS2TJ472T	C. RESISTOR 1/4W 4.7K	
R602	ERDS2TJ472T	C. RESISTOR 1/4W 4.7K	
R603	ERDS2TJ472T	C. RESISTOR 1/4W 4.7K	
R604	ERDS2TJ472T	C. RESISTOR 1/4W 4.7K	
R605	ERDS2TJ472T	C. RESISTOR 1/4W 4.7K	
R606	ERDS2TJ472T	C. RESISTOR 1/4W 4.7K	
R607	ERDS2TJ105T	C. RESISTOR 1/4W 1M	
R608	ERDS2TJ8R2T	C. RESISTOR 1/4W 8.2	
R801	ERDS2TJ103T	C. RESISTOR 1/4W 10K	
R802	ERDS2TJ103T	C. RESISTOR 1/4W 10K	
R803	ERDS2TJ103T	C. RESISTOR 1/4W 10K	
R804	ERDS2TJ103T	C. RESISTOR 1/4W 10K	
R805	ERDS2TJ273T	C. RESISTOR 1/4W 27K	
R806	ERDS2TJ273T	C. RESISTOR 1/4W 27K	
R807	ERDS2TJ273T	C. RESISTOR 1/4W 27K	
R808	ERDS2TJ273T	C. RESISTOR 1/4W 27K	
R809	ERDS2TJ473T	C. RESISTOR 1/4W 47K	
R810	ERDS2TJ473T	C. RESISTOR 1/4W 47K	
R811	ERDS2TJ473T	C. RESISTOR 1/4W 47K	
R812	ERDS2TJ473T	C. RESISTOR 1/4W 47K	
R813	ERDS2TJ221T	C. RESISTOR 1/4W 220	
R814	ERDS2TJ221T	C. RESISTOR 1/4W 220	
R815	ERDS2TJ474T	C. RESISTOR 1/4W 470K	
R816	ERDS2TJ474T	C. RESISTOR 1/4W 470K	
R817	ERDS2TJ104T	C. RESISTOR 1/4W 100K	
R818	ERDS2TJ104T	C. RESISTOR 1/4W 100K	
R819	ERDS2TJ471T	C. RESISTOR 1/4W 470	
R820	ERDS2TJ471T	C. RESISTOR 1/4W 470	
R821	ERDS2TJ473T	C. RESISTOR 1/4W 47K	
R822	ERDS2TJ473T	C. RESISTOR 1/4W 47K	
R823	ERDS2TJ331T	C. RESISTOR 1/4W 330	
R824	ERDS2TJ331T	C. RESISTOR 1/4W 330	
R825	ERDS2TJ102T	C. RESISTOR 1/4W 1K	
R826	ERDS2TJ102T	C. RESISTOR 1/4W 1K	
R831	ERDS2TJ331T	C. RESISTOR 1/4W 330	
R832	ERDS2TJ331T	C. RESISTOR 1/4W 330	
R833	ERDS2TJ472T	C. RESISTOR 1/4W 4.7K	
R834	ERDS2TJ561T	C. RESISTOR 1/4W 560	
R835	ERDS2TJ472T	C. RESISTOR 1/4W 4.7K	
R836	ERDS2TJ472T	C. RESISTOR 1/4W 4.7K	
R837	ERDS2TJ100T	C. RESISTOR 1/4W 10	
R838	ERDS2TJ100T	C. RESISTOR 1/4W 10	
R839	ERDS2TJ182T	C. RESISTOR 1/4W 1.8K	
R840	ERDS2TJ101T	C. RESISTOR 1/4W 100	
R851	ERDS2TJ102T	C. RESISTOR 1/4W 1K	
R852	ERDS2TJ471T	C. RESISTOR 1/4W 470	
R853	ERDS2TJ102T	C. RESISTOR 1/4W 1K	

Ref. No.	Part No.	Part Name & Description	Remarks
R854	ERDS2TJ472T	C. RESISTOR 1/4W 4.7K	
R855	ERDS2TJ183T	C. RESISTOR 1/4W 18K	
R856	ERDS2TJ333T	C. RESISTOR 1/4W 33K	
R857	ERDS2TJ102T	C. RESISTOR 1/4W 1K	
R858	ERDS2TJ102T	C. RESISTOR 1/4W 1K	
R859	ERDS2TJ105T	C. RESISTOR 1/4W 1M	
R860	ERDS2TJ105T	C. RESISTOR 1/4W 1M	
R861	ERDS2TJ472T	C. RESISTOR 1/4W 4.7K	
		CAPACITORS	
C1	ECKDKC103PF2	E. CAPACITOR 125V 0.01U	
C2	ECFR1H103KB	S. CAPACITOR 50V 0.01U	
C3	ECFR1H103KB	S. CAPACITOR 50V 0.01U	
C10	ECFR1E104ZF5	S. CAPACITOR 25V 0.1U	
C11	ECEA1CU222E	E. CAPACITOR 16V 2200U	
C12	ECEA1CU222E	E. CAPACITOR 16V 2200U	
C13	ECFR1E104ZF5	S. CAPACITOR 25V 0.1U	
C14	ECEA0JK470B	E. CAPACITOR 6.3V 47U	
C15	ECEA0JK470B	E. CAPACITOR 6.3V 47U	
C16	ECEA1AK101B	E. CAPACITOR 10V 100U	
C17	ECEA1AK101B	E. CAPACITOR 10V 100U	
C18	ECEA1CU221B	E. CAPACITOR 16V 220U	
C19	ECEA1CU331B	E. CAPACITOR 16V 330U	
C20	ECEA1CU331B	E. CAPACITOR 16V 330U	
C21	ECEA1VU101B	E. CAPACITOR 35V 100U	
C22	ECEA1VU101B	E. CAPACITOR 35V 100U	
C51	ECEA1HKN010B	E. CAPACITOR 50V 1U	
C301	ECBT1C103NS5	E. CAPACITOR 50V 1U	
C302	ECBT1C103NS5	E. CAPACITOR 50V 1U	
C303	ECFR1E104ZF5	S. CAPACITOR 25V 0.1U	
C304	ECFR1E104ZF5	S. CAPACITOR 25V 0.1U	
C306	ECBT1H270J5	E. CAPACITOR 50V 27U	
C351	ECBT1H102KB5	E. CAPACITOR 50V 0.001U	
C352	ECBT1H102KB5	E. CAPACITOR 50V 0.001U	
C353	ECBT1H102KB5	E. CAPACITOR 50V 0.001U	
C401	ECFR1E104ZF5	S. CAPACITOR 25V 0.1U	
C402	ECEA0JK470B	E. CAPACITOR 6.3V 47U	
C403	ECFR1E104ZF5	S. CAPACITOR 25V 0.1U	
C404	ECFR1E104ZF5	S. CAPACITOR 25V 0.1U	
C405	ECFR1E104ZF5	S. CAPACITOR 25V 0.1U	
C406	ECBT1H102KB5	E. CAPACITOR 50V 0.001U	
C407	ECBT1H102KB5	E. CAPACITOR 50V 0.001U	
C451	ECFR1E104ZF5	S. CAPACITOR 25V 0.1U	
C452	ECEA0JK470B	E. CAPACITOR 6.3V 47U	
C453	ECFR1E223KB	S. CAPACITOR 25V 0.022U	
C501	ECQM1H104KF3	P. CAPACITOR 50V 0.1U	
C502	ECFR1E104ZF5	S. CAPACITOR 25V 0.1U	
C503	ECEA1CK100B	E. CAPACITOR 16V 10U	
C504	ECFR1E104ZF5	S. CAPACITOR 25V 0.1U	
C505	ECFR1E104ZF5	S. CAPACITOR 25V 0.1U	
C506	ECBT1H150JC5	E. CAPACITOR 50V 15P	

www.manualscenter.com

D

Ref. No.	Part No.	Part Name & Description	Remarks
C507	ECBT1H102KB5	E. CAPACITOR 50V 0.001U	
C508	ECEA1CKN100B	E. CAPACITOR 16V 10U	
C509	ECBT1H470J5	E. CAPACITOR 50V 47P	
C510	ECQM1H104KF3	P. CAPACITOR 50V 0.1U	
C511	ECEA1HKAR47B	E. CAPACITOR 50V 0.47U	
C512	ECBT1H681KB5	E. CAPACITOR 50V 68P	
C513	ECBT1H681KB5	E. CAPACITOR 50V 68P	
C514	ECQV1H474JZ3	P. CAPACITOR 50V 0.47U	
C515	ECQM1H153KF3	P. CAPACITOR 50V 0.015U	
C516	ECEA1VKN2R2B	E. CAPACITOR 35V 2.2U	
C518	ECBT1H561KB5	E. CAPACITOR 50V 56P	
C601	ECEA0JK470B	E. CAPACITOR 6.3V 47U	
C602	ECFR1E104ZF5	S. CAPACITOR 25V 0.1U	
C603	ECFR1E104ZF5	S. CAPACITOR 25V 0.1U	
C801	ECBT1H680J5	E. CAPACITOR 50V 68P	
C802	ECBT1H680J5	E. CAPACITOR 50V 68P	
C803	ECBT1H680J5	E. CAPACITOR 50V 68P	
C804	ECBT1H680J5	E. CAPACITOR 50V 68P	
C805	ECBT1H470J5	E. CAPACITOR 50V 47P	
C806	ECBT1H470J5	E. CAPACITOR 50V 47P	
C807	ECBT1H470J5	E. CAPACITOR 50V 47P	
C808	ECBT1H470J5	E. CAPACITOR 50V 47P	
C809	ECEA1EKN3R3B	E. CAPACITOR 25V 3.3U	
C810	ECEA1EKN3R3B	E. CAPACITOR 25V 3.3U	
C811	ECBT1H102KB5	E. CAPACITOR 50V 0.001U	
C812	ECBT1H102KB5	E. CAPACITOR 50V 0.001U	
C813	ECEA1CKN220B	E. CAPACITOR 16V 22U	
C814	ECEA1CKN220B	E. CAPACITOR 16V 22U	
C815	ECBT1H102KB5	E. CAPACITOR 50V 0.001U	
C816	ECBT1H102KB5	E. CAPACITOR 50V 0.001U	
C831	ECFR1E104ZF5	S. CAPACITOR 25V 0.1U	
C832	ECEA0JU331B	E. CAPACITOR 6.3V 330U	
C833	ECFR1E104ZF5	S. CAPACITOR 25V 0.1U	
C834	ECEA0JU331B	E. CAPACITOR 6.3V 330U	
C835	ECFR1E104ZF5	S. CAPACITOR 25V 0.1U	
C836	ECFR1E104ZF5	S. CAPACITOR 25V 0.1U	
C837	ECFR1E104ZF5	S. CAPACITOR 25V 0.1U	
C838	ECBT1H5R6K5	E. CAPACITOR 50V 5.6P	
C840	ECBT1H5R6K5	E. CAPACITOR 50V 5/6P	
C841	ECEA0JK101B	E. CAPACITOR 6.3V 100U	
C842	ECFR1E104ZF5	S. CAPACITOR 25V 0.1U	
C843	ECFR1E104ZF5	S. CAPACITOR 25V 0.1U	
C844	ECBT1H270J5	E. CAPACITOR 50V 27P	
C845	ECFR1E104ZF5	S. CAPACITOR 25V 0.1U	
C851	ECEA0JU471B	E. CAPACITOR 6.3V 470U	
C852	ECEA1CKN100B	E. CAPACITOR 16V 10U	

Ref. No.	Part No.	Value.	
RESISTORS			
R3501	4822 116 52426	4K7 1/2	MB
R3502	4822 111 90214	100K 1/8	MB
R3503	4822 111 30499	4E7 1/3	MB
R3504	4822 111 30499	4E7 1/3	MB
R3505	4822 111 90253	12K 1/8	MB

Ref. No.	Part No.	Value.	
R3506	5322 111 90091	100 1/8	MB
R3507	4822 111 90248	2K2 1/8	MB
R3508	4822 111 90512	24K 1/8	MB
R3509	4822 111 90572	5K6 1/8	MB
R3510	4822 111 90249	10K 1/8	MB
R3521	4822 111 90178	220 1/8	MB
R3522	4822 111 30515	18 1/3	MB
R3523	4822 111 30511	12 1/3	MB
R3524	5322 111 90091	100 1/8	MB
R3530	4822 111 90543	47K 1/8	MB
R3531	4822 111 90344	15K 1/8	MB
R3533	5322 111 90268	5K1 1/8	MB
R3534	4822 111 90197	220K 1/8	MB
R3535	4822 116 53081	12K 3/5	MB
R3540	4822 116 52858	4E7 3/5	MB
R3541	4822 111 90544	6K8 1/8	MB
R3542	4822 111 90124	82 1/8	MB
R3543	4822 111 90544	6K8 1/8	MB
R3544	4822 111 30483	1 1/3	MB
R3545	4822 111 30483	1 1/3	MB
R3550	4822 111 90248	2K2 1/8	MB
R3551	4822 116 90417	15K 1/8	MB
R3552	4822 111 90171	820 1/8	MB
R3554	4822 116 90421	2K 1/8	MB
R3555	4822 111 90251	22K 1/8	MB
R3560	4822 111 91494	11K 1/8	MB
R3561	4822 116 90417	150K 1/8	MB
R3562	4822 116 52845	120K 3/5	MB
R3563	4822 111 90573	56K 1/8	MB
R3564	4822 111 91495	160K 1/8	MB
R3565	4822 116 52354	27 1/2	MB
R3566	4822 111 90186	22 1/8	MB
R3567	4822 116 52478	82K 1/2	MB
R3568	4822 111 90161	470K 1/8	MB
R3801	4822 111 90163	0E	MB
R3802	4822 111 90163	0E	MB
CAPACITORS			
C2501	4822 122 33147	0.022 50	MB
C2502	4822 124 22027	47 10	MB
C2503	4822 122 33147	0.022 50	MB
C2504	4822 122 31727	470P 63	MB
C2505	4822 124 22027	47 25	MB
C2506	4822 122 33104	100NF 63	MB
C2507	4822 122 31644	0.0022 63	MB
C2508	5322 121 42491	0.047 100	MB
C2509	4822 122 31772	47P 50	MB
C2510	4822 122 32442	0.01 50	MB
C2511	4822 122 31746	0.001 50	MB
C2513	4822 121 42245	0.22 63	MB
C2514	4822 121 51252	0.47 100	MB
C2515	4822 122 31746	0.001 50	MB
C2520	4822 122 31965	220P 63	MB
C2521	4822 124 22027	47 2.5	MB
C2530	4822 121 51321	0.0082 63	MB
C2531	4822 121 51321	0.0082 63	MB
C2532	4822 124 40272	33 16	MB
C2534	5322 121 42661	0.33 63	MB
C2535	5322 122 31848	0.033 63	MB
C2536	5322 122 31848	0.033 63	MB
C2537	4822 121 42245	0.22 63	MB
C2538	4822 121 42245	0.22 63	MB
C2540	4822 124 41583	0.68 50	MB
C2541	4822 122 33147	0.022 50	MB
C2542	4822 122 33147	0.022 50	MB
C2543	4822 124 40196	220 16	MB
C2544	4822 124 40196	220µ 16	MB
C2545	4822 122 33104	0.1 63	MB
C2546	4822 122 33104	0.1 63	MB
C2547	4822 122 33147	0.022 50	MB
C2550	4822 121 51049	0.015 63	MB
C2551	4822 121 51225	18NF 63	MB
C2560	4822 122 31784	0.0047 50	MB
C2561	4822 121 51252	0.047 100	MB
C2562	5322 121 42661	0.033 63	MB
C2563	4822 122 33104	100NF 63	MB
C2565	4822 122 32808	0.0012 50	MB

D www.manualscenter.com

■ TECHNICAL INFORMATION

Explanation on the CDM4 mini system and servo circuit for service engineers

1.System Configuration

1-1.Block Diagram Rough

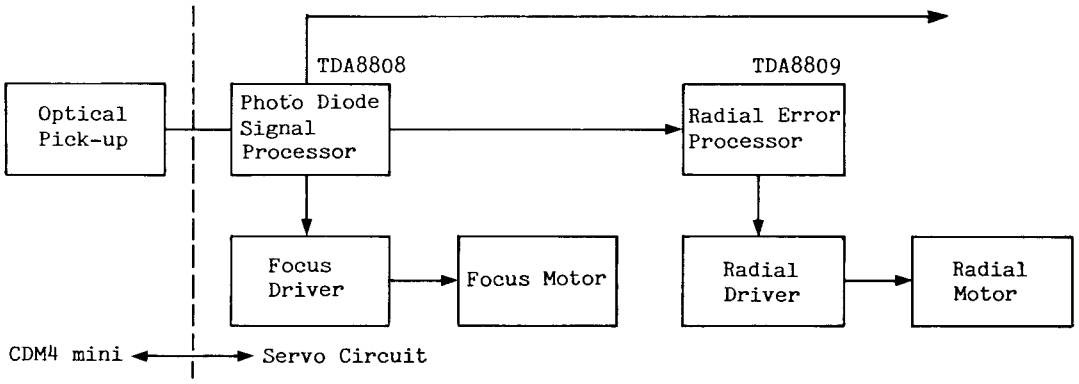

* Refer to the page 18 and 19.

2.Rough Explanation of the Functions of the CDM4 mini System Part.

2-1.Servo electronics CDM4 mini system.

TDA8808: bipolar photo diode signal processor

- Photodiode signal preamplifiers with separate h.f. and d.c. a.g.c. for optimum generation of the h.f. data signal and the focusing/tracking error signals.
- Tracking error signal amplifier.
- Focus error signal processor with focus normalizing and start-up circuit.
- Data equalizer.

  h.f. level and track-loss detectors.
- Regulated supply for the reading laser diode.
- Low current consumption: 15mA (8V -14V).

TDA8809: bipolar radial error processor

- Tracking error processor with automatic asymmetry control.
- a.g.c. circuitry with automatic start-up wobble generator.
- Tracking control for fast forward/reverse scan, search, repeat and pause functions.
- Low current consumption: 10mA (8V - 14V).

www.manualscenter.com

D

2-2. CDM4 mini Optical Pick-up

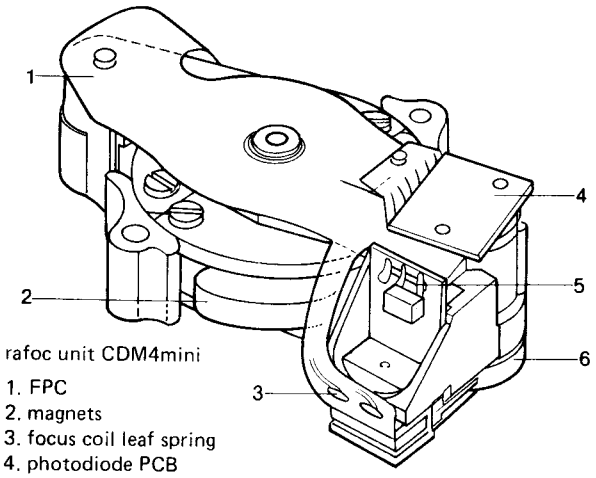

rafoc unit CDM4mini

1. FPC
2. magnets
3. focus coil leaf spring
4. photodiode PCB
5. LASER protection PCB
6. focus unit

A feature of the CDM4 mini pick-up is its simple diffraction limited optics. The laser point source is focused on the information layer of the disc by two lenses: a spherical glass objective with a plastic aspherical skin, and a spherical glass collimator.

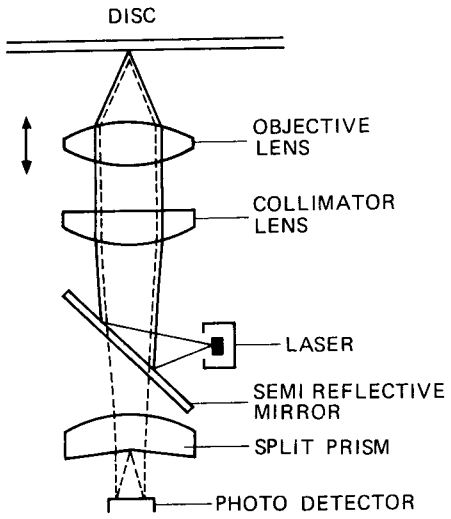

CDM4 Mini

Furthermore, a semi-transparent mirror is used instead of a beam-splitter cube. Astigmatism introduced into the reflected beam by the mirror is corrected by a plastic component (the wedge) which also dissects the beam into the two halves from which the tracking and focus error signals are generated.

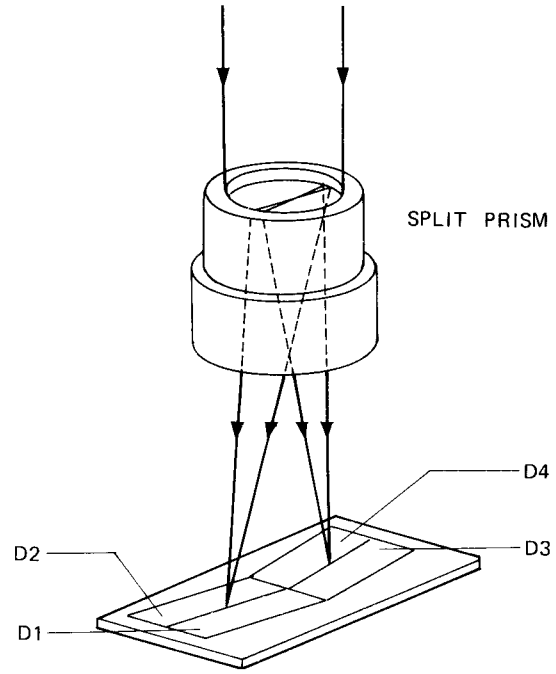

DETAIL OF LASER BEAM

3. Detailled Explanation of the Functions in the Servo.

3-1-1 The LASER supply

The LASER supply circuit has a working principle like the basic schematic below.

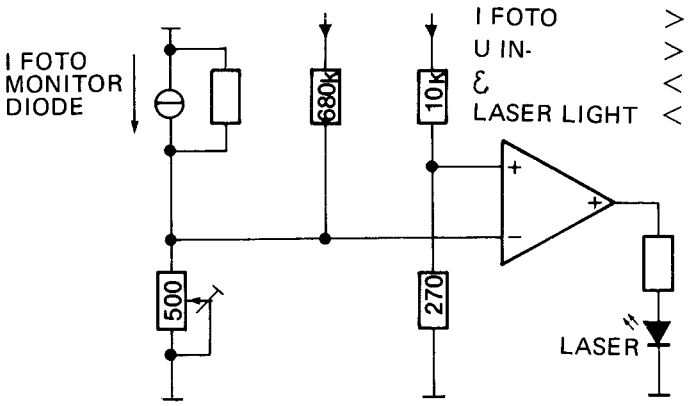

The LASER supply function integrated in the TDA8808 has as an extra an overload protection and a turn on transient protection. The LASER current is regulated by sensing the monitor photodiode current.

The threshold voltage of the LASER diode is approximately 1.75V and the sense voltage is approx. 200mV. It is not allowed to measure the sense voltage. A distortion at this end of the loop might cause severe damage to the LASER diode.

D

www.manualscenter.com

3-1-2 h.f. Signal handling, h.f. a.g.c.
and data qeualizer.

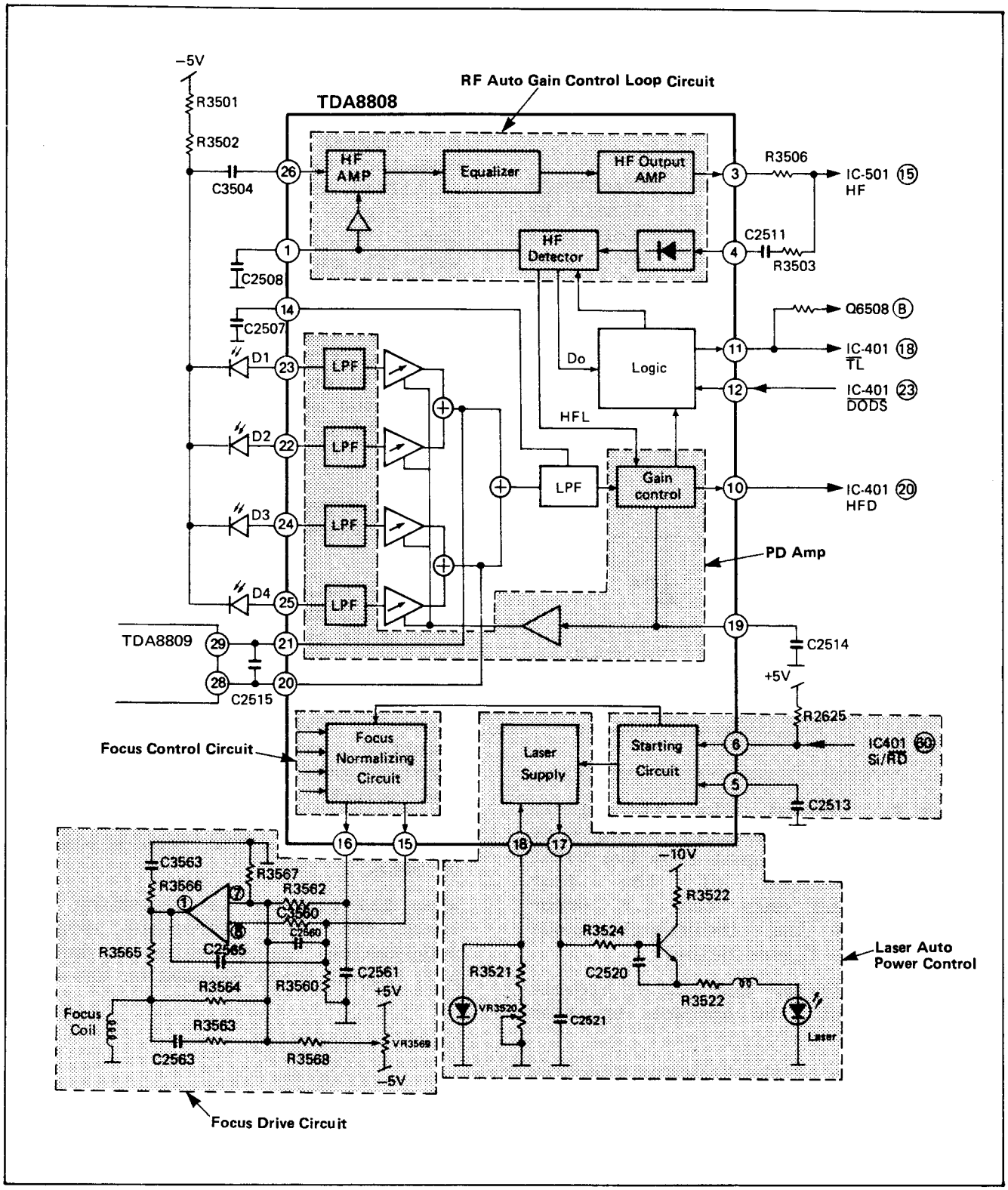

www.manualscenter.com

D

The photodiodes used in the optical pick-up are connected in reverse direction. The photodiodes require a reverse bias of at least 5V. Bias current is set by R3501 and R3502. Supply noise and interference is kept away by R3501 and C2521. Coupling of the h.f. signal is performed by C2504, R3502 and C2521 also prevent h.f. coming into the supply.

The h.f. signal is effectively separated; from the I.f. signals by deriving the h.f. signal from the total substrate current of the four photodiodes and only the I.f. error signals from the individual anode currents.(see figure below).

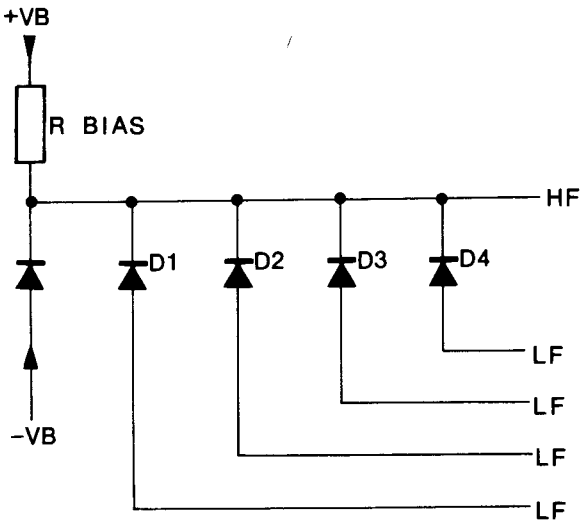

The h.f. signal is effectively separated; from the I.f. signals by deriving the h.f. signal from the total substrate current of the four photodiodes and only the I.f. error signals from the individual anode currents. (see figure below).

The h.f. amplifier and a.g.c. circuit have to meet the correct transfer function.

The parameters of the transfer function are set by R3505, R3508, R3507, C2509, and C2508.

With internal girators the qeualizer provides a 3rd order bessel filter for making the correct modular transfer function to compensate the optical pick-up system. The total IC bias current is set by the value of R3508 and decoupled by C2510. The girator circuits are set by the value of R3505.

The 3rd pole of the modular transfer function is made by the RC circuit containing R3507, C2511 and the capacitance of the h.f. wire from the CDM to the demodulator circuits.

3-1-3 The amplitued level detector

For the a.g.c. the amplitude of the h.f. signal is measured in a level detector by comparing a full-wave rectified and fitered version of the h.f. signal with an internal reference level. The level detector is not data path but parallel to the data path as in the CDM4 system. For fast response to drop-out the time constant of the high pass filter formed by R3507, C2511 and the detector input resistance has to be 10 sec. In the h.f. amplitude slicer the amplitude of the h.f. signal is sliced in 3 levels.

62% and below is HFD
12% and below is DO

The HFD output is used to switch the PLL on and off ensuring minimum locking loss while having a drop-out or during searching. This provides fast relocking afterwards.

Capacitor C2508 in combination with an internal switch provides a more constant gain control during drop-outs. The switch is operated by the HFD signal. This set-up restricts the h.f. signal and gives the loop a bandwidth of 50Hz.

When the pick-up is searching for a track the DODS (drop-out detection suppression) is activated to keep the h.f. signal level clamped on the normal

www.manualscenter.com

3-1-4 The photodiode current amplifiers and I.f. a.g.c.

The low pass filters for the photodiode inputs D1 - D4 are integrated in the photodiode signal processor.

The outputs for RE1 (RE1 = D1 + D2) and RE2 (RE2 = D3 + D4) are open collector outputs. In case an external pull-up has to be connected, it has to be connected to Vdd.

Normally the pull-up function is done by the inputs of the radial error processor.

The a.g.c. for the photodiode amplifiers keeps the d.c. sum current constant for all discs. The control loop has a LPF which is set by the value of C2507.

3-1-5 The track loss detector

During playback of a disc, the radial error signals keep the pick-up on track. In case of searching for a certain spot of music, the pick-up has to jump over the tracks. To maintain the control of the pick-up during a search operation, the microprocessor must be informed whether the pick-up is on track or off track. This function is performed by the track-loss detector.

Condition to be met for the track-loss:

- The gain controlled h.f. signal has to be between 12% and 62% of the nominal value (100% is set by the h.f. a.g.c.).
- Average light intensity of the I.f. signal is more than 120% of the nominal value (100% is set by the I.f.a.g.c.).

All values are set during track following.

Use of the TL signal:

1. Counting tracks when track jumping.
2. In case a TL is detected during normal playback the control microprocessor looks to the RE dig signal from the radial error processor and compensates the tracking error by means of the DAC signal.

   Such a situation can only occur due to large knocks. This set up makes the system extremely tolerant for bumps.

   (Formula TL=FS>120% and 63%>HFL>12%).

3-1-6 Focus processing

The CDM4 pick-up uses two focuault knife focus pick-ups to keep the reading spot focused on the data layer of the disc.

The TDA8808 has two focus outputs: FE and FE lag.

FE lag is the basic focus error signal. FE is a normalized version of FE to remove the effect of the unequal illumination of photodiode pairs D1, D2 and D3, D4 which occurs in case of tracking errors.

PRINCIPLE

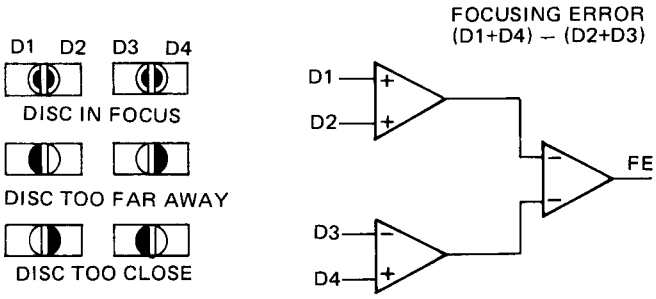

$$FE\ lag = (I1 + I4) - (I2 + I3).Ftransfer$$

$$FE = \frac{I1 - I2}{I1 + I2} + \frac{I4 - I3}{I4 + I3}. \quad I\ control$$

Since in focus $I1 + I2 \approx I3 + I4$

and $I1 \approx I2 \approx I3 \approx I4$ with a.g.c. on

FE = FE lag on trace

Either one signal or both signals can be used to control the focus actuator. The FE lag signal gives the loop the correct gain and phase margin. The FE signal has an important role in the start-up procedure.

www.manualscenter.com

3-1-7 Start-up procedure

The whole start-up procedure is sequenced by the voltage across capacitor C2513. Capacitor C2513 is charged by an internal current source of 1 µA nom.
Together with a starting capacitor of 270 nF, a starting-up time of approximately 0.3 sec. is reached.

The start-up procedure is divided in stages. The procedure is started by putting a logical low level at the Si/$\overline{RD}$ input.

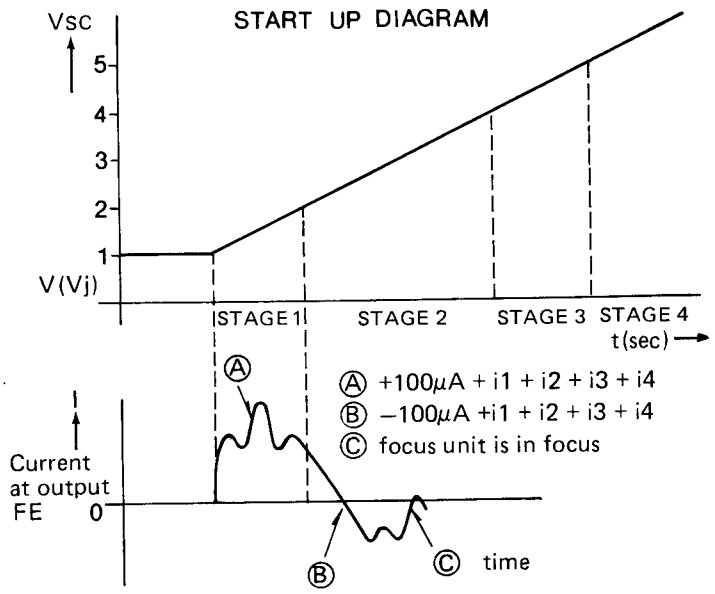

STAGE 1

Laser turns on and the objective is moved to the center of the disc. The turntable motor is switched on. The FE pin delivers a positive going starting current of 100 µA + the sum current (I1 + I2 + I3 + I4).

Note the I.f. a.g.c. does not see light, so max amplification.

STAGE 2

The starting current is reversed, gradually causing the objective to go down. This process is stopped when the starting current equals the amplified sum current (I1 + I2 + I3 + I4).

Note: I1 + I2 + I3 + I4 = 100µA

STAGE 3

A smooth transition is made from the amplified sum current (I1 + I2 + I3 + I4) to the normalized focus error signal

$$\frac{I1 - I2}{I1 + I2} + \frac{I4 - I3}{I4 + I3}$$

The spot is now almost focused on the reflective layer of the disc.

The signals to the FE pin.

STAGE 1 (starting-up current + I1 + I2 + I3 + I4)
STAGE 2 (starting-up current + I1 + I2 + I3 + I4)

Stage 3 $\frac{I1 - I2}{I1 + I2} + \frac{I4 - I3}{I4 + I3}$
This should be almost 0

The signal to the FE lag pin.

Stage 4 (I1 + I4) - (I3 + I2) + the normalized FE (like in stage 3)

The arm is kept at the inside recess by means of a binary word from the microprocessor at B0, B1, B2, and B3 of the radial error processor.

www.manualscenter.com

D

3-2 TDA8809 RADIAL ERROR PROCESSOR

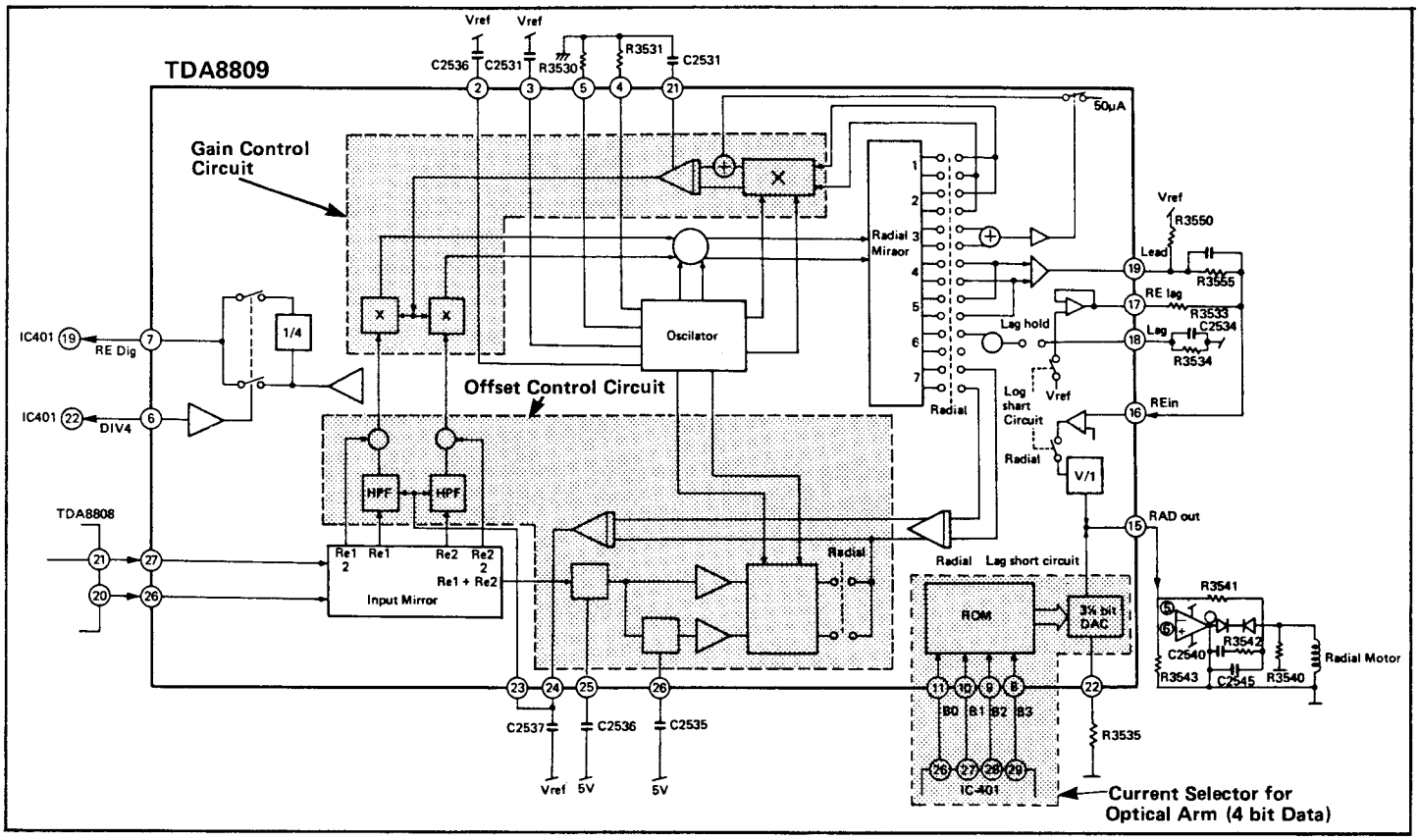

- The resistor R3535 sets the amount of output current of the DAC signal.
- The other components setting the oscillator frequency are R3530, R3531, C2530, C2531.
- The inputs B0 - B3 are used to control the operations which have to be performed by the radial error processor.
- The DAC output is a current source output used to move the radial arm. The normal control is RE, but to jump beyond tracks and to compensate bumps the DAC signal is used.
- The RE lag output gives the loop a more powerful control.
  This output is only activated during normal playback.
- The RE dig is a 1-bit quantized version of the RE signal. The function of RE dig is not in all sets the same. Below is the function in a audio player explained. If a TL occurs the microprocessor looks to RE dig, the value of RE dig indicates whether the microprocessor has to compensate for a right or left bump via DAC . The maximum hold range of RE is normally 1/4 track pitch due to the sinusoidal form of the radial error signal. By means of TL and RE dig the hold range is extended to 3/4 track pitch.
- For high speed track crossing, four dived RE dig signal is given by pulling Div 4 input to low level.

3-2-1 Radial processing

The radial error processor has to process the basic input signals RE1 and RE2 and to generate the full radial error signal RE. The RE signal is the basic signal to keep the reading beam on track.

RE1 and RE2 are caused by more or less light of the laser failing onto diodes D1, D2 or D3, D4 (see figure below)

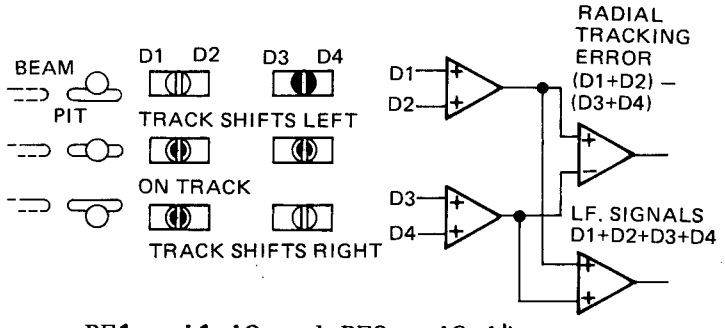

RE1 = i1+i2 and RE2 = i3+i4

www.manualscenter.com

The processing formula produced by the radial error processor is RE = k d (i1+i2+i3+i4) - k(i1+i2).

The factors k and d are detected from the loop itself by processing a low frequency wobble fault signal, which is injected into the loop. Injection of this causes a displacement of +/- 0.05 µm of the arm.
The k is again factor and has to compensate:

- The tracking angle fault (varies between 90 degrees, smallest radius, and 45 degrees, largest radius).
- The pit geometry of disc (causing the amplitude of radial error signals to vary up to 100% from disc to disc).
- Deterioration of the laserdiode.

3-2-2 Automatic gain control (k-factor)

Detection of the desired value is done by detecting the phase angle of an injected wobble signal in the radial loop.

The closed loop transfer function has a phase shift of 135 degrees at 650 Hz (the wobble frequency).

To maintain the loop gain, the phase of the closed loop signal of RE is compared with a -45 degrees shifted signal derived from the 650 Hz wobble injection oscillator. If the gain is nominal the output of this phase comparator is zero. In other cases a positive or negative phase error signal is detected.

The detected signal is integrated by C2538. The value of this integrated signal sets the gain. This completes the set up for the k factor in TDA8809.

Note: The phase comparator is a linear multiplier which ensures that the a.g.c. loop is unaffected by spurious signals near the odd harmonics of the wobble frequency.

The open-loop gain control is clamped to an internal reference level during starting-up and searching.

3-2-3 Automatic asymmetry control (d-factor)

The radial error signal in a single-beam pick-up is derived from a comparison of the light intensity in each pupil half.

Errors in this signal can be caused by:
- Asymmetry in the far-field pattern of the laser.
- Light path to the disc.
- Imperfections in the beam splitter.

Errors can be corrected by bringing the d-factor in the total transfer function.

The wobble used to measure the k-factor is also used to measure the asymmetry. The signal causes the beam to wobble with an amplitude of 0.05 um. When the reading spot is to the right of the track the total amount of L.F.light (iTOT = i1+i2+i3+i4 = RE1 + RE2) is in phase with the wobble in the radial error signal.

When the reading spot is to the left the I.f. sum signal (RE1 + RE2) is 180 degrees out of phase with the wobble.

The sum signal is in practice multiplied by a 90 degrees shifted version of the wobble signal. The multiplier is again linear giving the above-mentioned benefits. The loop has a filter which is set by the value of C2537.

The imperfections mentioned above make the beam follow the track at one of its edges. The wobble component in the RE signal for such a situation is visualised below.

Note: C2537 is the capacitor which integrates the d-factor.

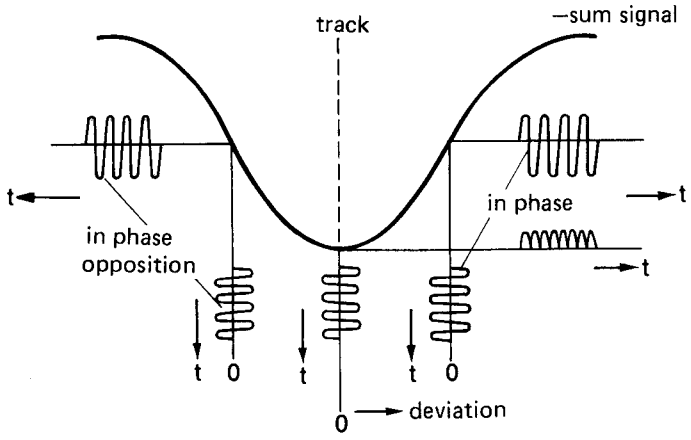

D
www.manualscenter.com

■ TROUBLESHOOTING GUIDE

SL-P202A Operation Sequence Check Sheet

Play Operation Sequence

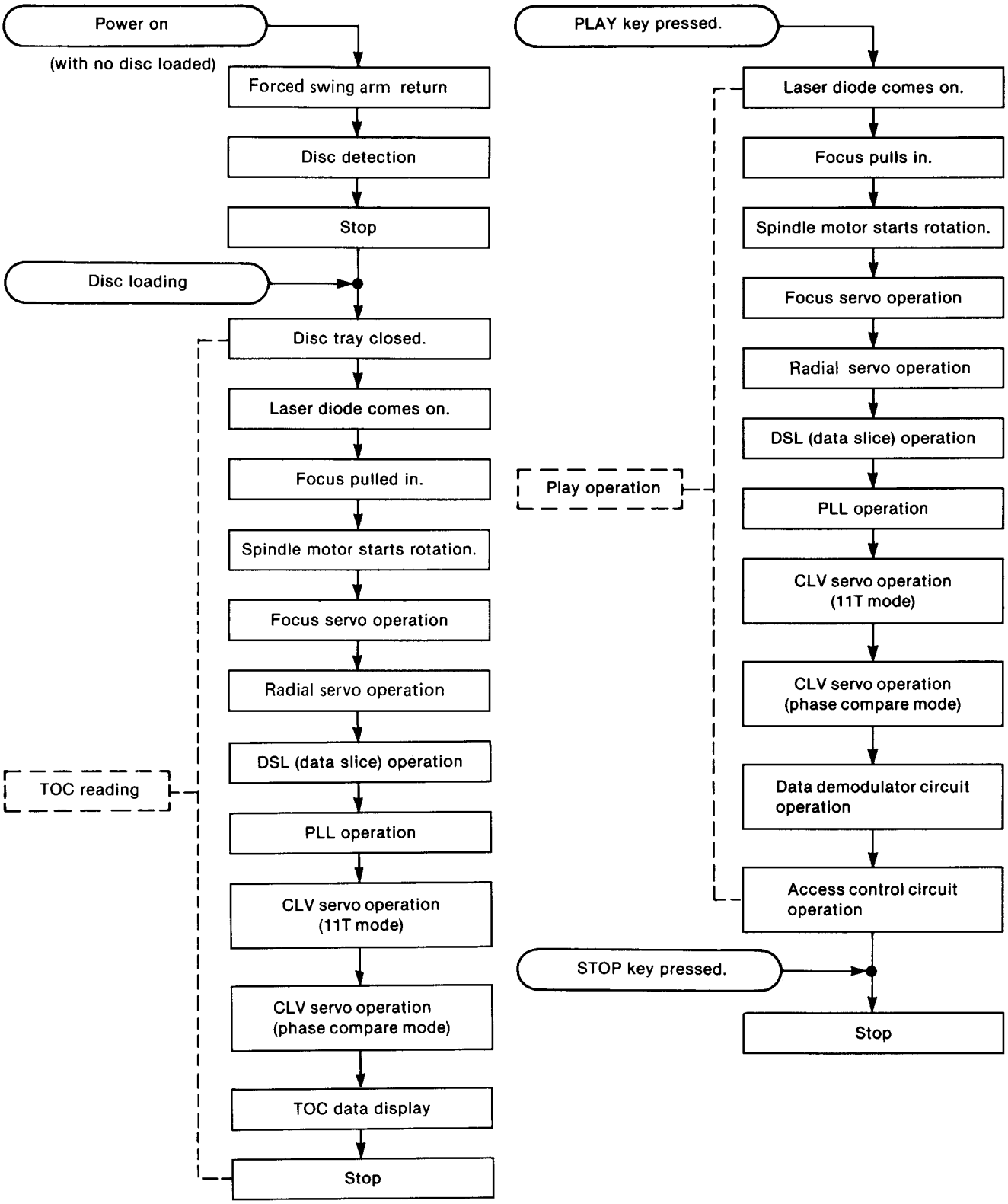

www.manualscenter.com

D

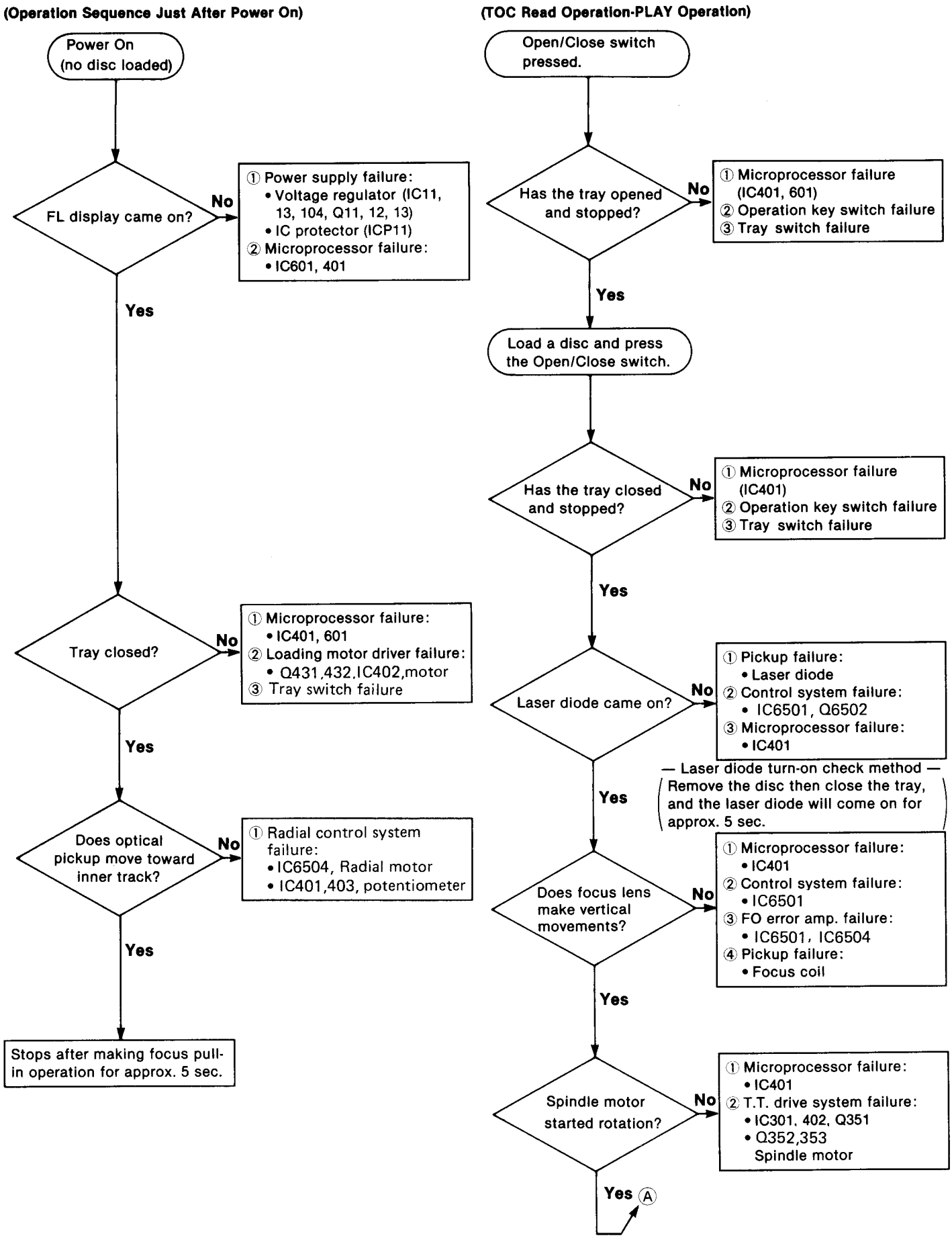

www.manualscenter.com

D

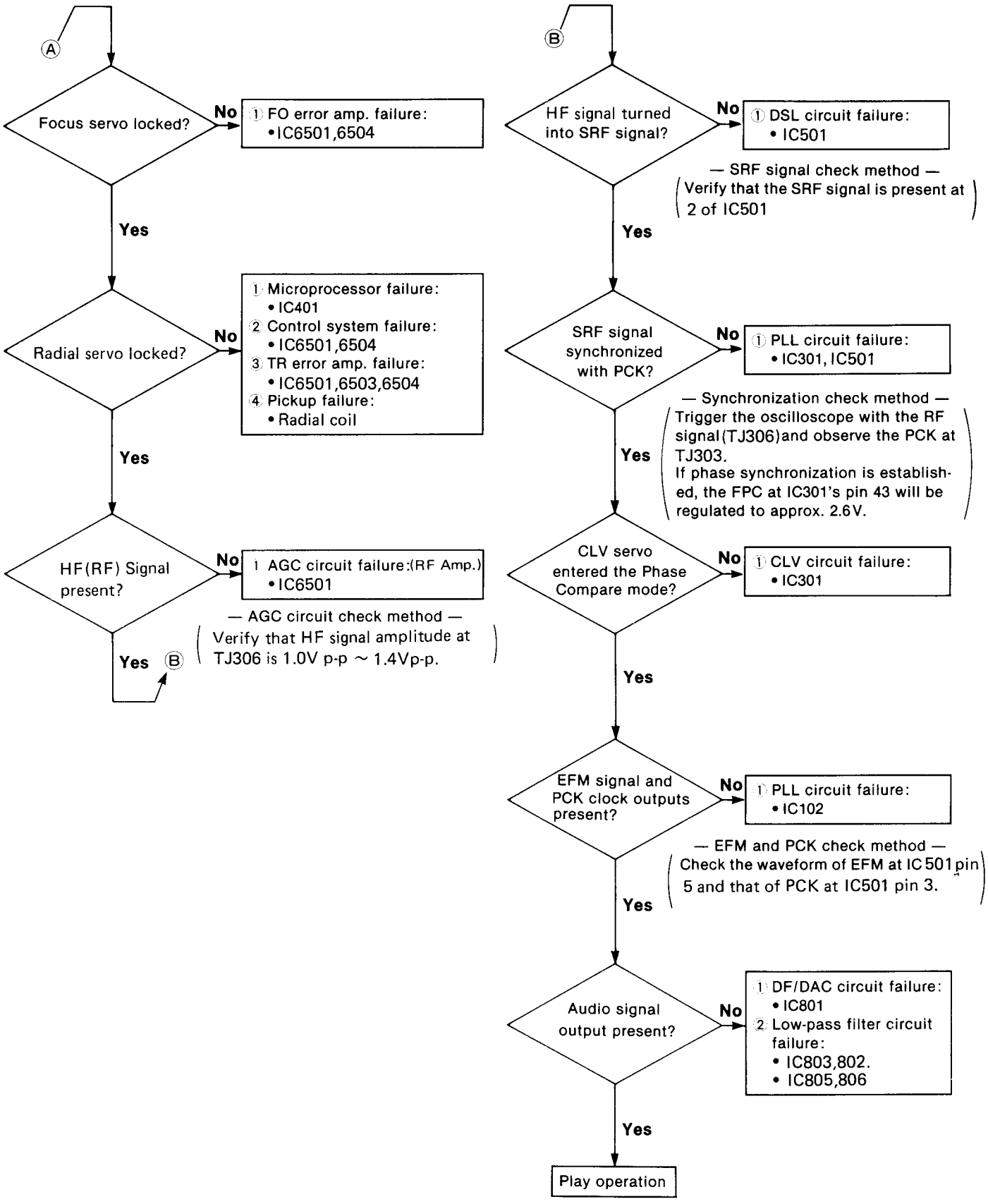

www.manualscenter.com

Printed in Japan
K881206150YY/TN

D