ST-H3600/H6600

SERVICE MANUAL

AEP Model
UK Model

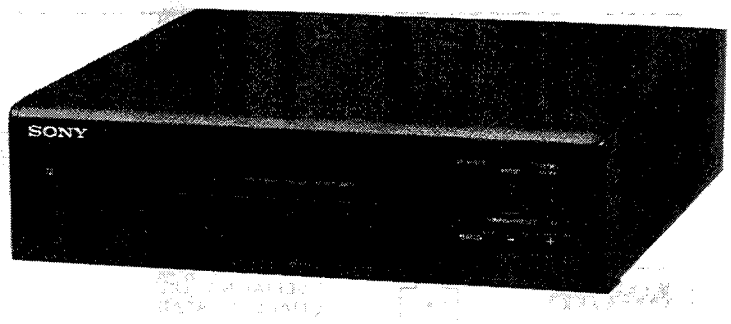

ST-H3600 and ST-H6600 are the tuner section in MHC-2600/3600 and MHC-5600/6600 respectively.

Photo : ST-H6600

SPECIFICATIONS

System	FM stereo, FM/AM superheterodyne tuner
FM tuner section	
Tuning range	87.5 — 108 MHz
Antenna terminals	75 ohm unbalanced
Intermediate frequency	10.7 MHz
AM tuner section	
Tuning range	For AEP, UK models MW: 531 — 1,602 kHz LW: 153 — 279 kHz For Italian model MW: 522 — 1,611 kHz LW: 144 — 288 kHz
Antenna	AM loop antenna. External antenna terminals
Intermediate frequency	450 kHz

Note :
G : Germany model
IT : Italian model

TABLE OF CONTENTS

FM STEREO/FM-AM TUNER

SONY®

MODEL IDENTIFICATION

– BACK PANEL –

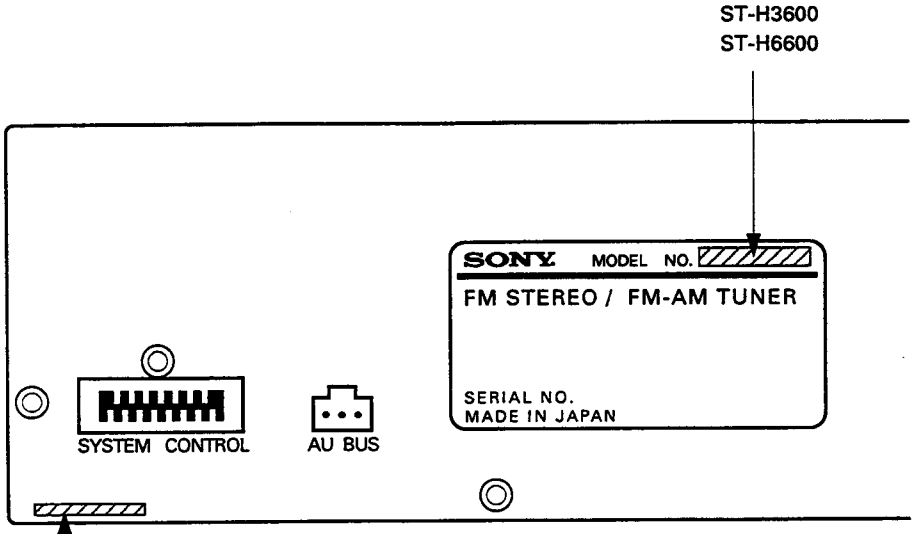

4-942-893-51. AE ..... ST-H3600 AEP,UK model
4-942-893-81. AE4 ..... ST-H3600 G model
4-942-893-91. IT ..... ST-H3600 IT model

4-942-893-01. AE ..... ST-H6600 AEP model
4-942-893-31. AE4 ..... ST-H6600 G model
4-942-893-41. IT ..... ST-H6600 IT model

SECTION 1
SERVICING NOTES

SUPPLY OF POWER DURING SERVICES

Because the equipment is not provided with any power supply, it is operated with power supplied from the amplifier TA-H2600, H3600, H5600 or H6600 used in the series. The equipment requires the following 4 types of voltages. Therefore, connect the equipment to TA-H2600, H3600, H5600 or H6600 for services such as repairing with power supplied, because it will be too complicated to supply these voltages individually.

VOLTAGE	MAJOR CIRCUIT IN USE
AC 3.9V	FL tube filament voltage (VF)
DC -24V	Display controller IC701 grid voltage (VG)
DC -5.6V	Display controller IC701, Tuner PLL IC81 Vcc
DC 12V	Tuner RF, FM/AM DET IC21 Vcc

SERVICE MODE TO CHECK TIMER ON-OFF

It is possible to check whether the timer normally functions while being connected with an amplifier.

(1) Connect the equipment to the amplifier TA-H2600, H3600, H5600 or H6600 and set the POWER switch to STANDBY state.
(2) Set the time of the tuner to any time.
(3) Press 3 switches "BAND","-" and "MEMORY/NEXT" at the same time (while pressing "BAND" and "-" beforehand, finally press "MEMORY/NEXT")

(4) FL display tube

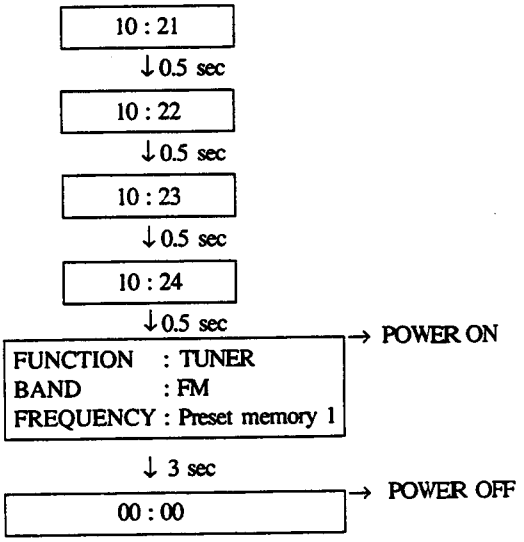

(5) Completion

Note : After completion of the checking above, data preset in the memory IC702 is erased while resetting the memory to the following state upon shipping from the works, so be sure to recover the same frequency as that before the repairing.

• **Frequencies initially preset**

	AEP/UK model			G/IT model		
	FM	MW	LW	FM	MW	LW
1	87.5MHz	531KHz	153KHz	87.5MHz	522KHz	144KHz
2	88.0MHz	603KHz	162KHz	88.0MHz	603KHz	162KHz
3	98.0MHz	999KHz	216KHz	98.0MHz	999KHz	216KHz
4	100.0MHz	1404KHz	270KHz	100.0MHz	1404KHz	270KHz
5	108.0MHz	1602KHz	279KHz	108.0MHz	1611KHz	288KHz
6 - 20	*1	*2	*2	*1	*2	*2

*1 The same frequency values are set for the preset memory No.6 - No.10, No.11 - No.15 and No.16 - No.20 as for No.1 - No.5 respectively.
*2 The same frequency values are set for the preset menory No.6 -No.10 as for No.1 - No.5.

SERVICE MODE TO CHECK FL TUBE AND KEY INPUT

It is possible to check FL tube all ON grid, segment and key input.

(1) Connect the equipment to the amplifier TA-H2600, H3600, H5600 or H6600 and remove the AC cord of the amplifier out of the AC receptacle.

(2) While pressing 3 switches "BAND","-" and "MEMORY/NEXT" at the same time, insert the AC cord of the amplifier into the receptacle.

(3) Thus, all FL display tubes light up. By pressing "+" or "TIMER CONTROL" in this state, partial lighting or key input checking, respectively, is effected.

Partial lighting: Indicates the mode to check complete connection between the grid and segment of the FL tube. The condition is normal when the following indication is effected. By pressing "+" or "-" in the partial lighting mode, the status returns to key input checking or all ON in (3), respectively.

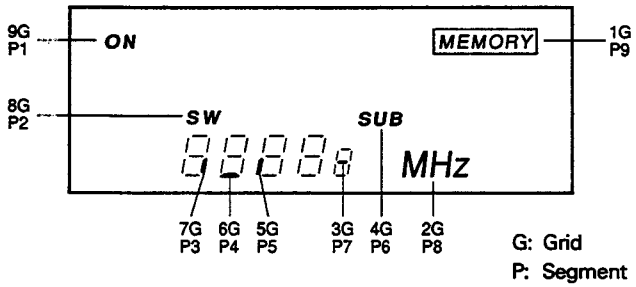

Key input checking: Shows the mode to check key input into 9 keys on the front panel. "0" is indicated at first and, every time a different key is pressed, indicated number is increased. After completion of pressing all 9 keys, "PASS" is indicated. (Once a key is pressed, pressing it again is rejected.)

(4) After the completion of the checking, the equipment recovers normal operation by once removing the AC cord and inserting it again into the AC receptacle.

HOW TO FORCEFULLY TURN POWER ON

The equipment is not provided with any power switch. Therefore, power ON/OFF is controlled in the amplifier side. However, even without an amplifier, power is supplyable to the equipment according to the following methods provided any type of power is available, e.g. using a special jig or supplying the 4 types of voltages individually.

(When power is supplied from the amplifier, power is turned ON only for the tuner.)

(1) Supply power.

(2) Press 3 switches "STEREO/MONO","-" and "MEMORY/NEXT" at the same time.
(Press "STEREO/MONO" and "-" beforehand, and finally press "MEMORY/NEXT.")

However, when the equipment is started up by the methods above, service modes TIMER ON/OFF and FL tube and key input checking are not operable.

Clock Setting

Setting the Clock

Example: Set to 9:25 in the morning.

1 **Press CLOCK SET.**

2 **Set the hour with the – or + button.**

3 **Press MEMORY/NEXT.**

4 **Set the minute with the – or + button.**

5 **Press MEMORY/NEXT.**
The clock starts operating.

Information on the time

The European and U.K. model shows the time in 24-hour cycle.
The model for other countries shows the time in 12-hour cycle.
AM 12:00 = midnight
PM 12:00 = noon

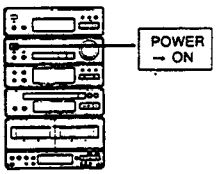

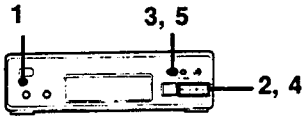

1

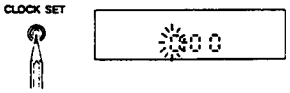

2

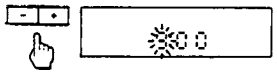

3

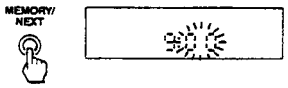

4

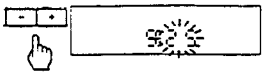

5

When a power interruption occurs
If the power is recovered within several hours, there is no need to reset the clock, timer, and Wake Up Volume settings. If the power interruption is long, all the above settings are erased, and "0:00" ("AM 12:00") will flash on the display.

To change the frequency display to the time display
Press CLOCK DISP. on the remote commander. Press it again to change to the frequency display.

Radio

The automatic tuning allows you to receive stations whose signal is strong enough. When the signal is too weak, use the manual tuning.

Tuning in Automatically

1 **Press BAND repeatedly until the desired band appears.**
As you press BAND, the band changes as follows:
European and U.K. model:
FM → MW → LW
Model for other countries:
FM → SW → MW

2 **Press MODE so that the TUNING indicator lights up.**

3 **Keep – or + depressed for more than 1 second.**
"AUTO" appears on the display and the unit tunes in a station automatically.

Repeat step 3 until the desired station appears.

Tuning in Manually

1 **Press BAND repeatedly until the desired band appears.**

2 **Press MODE so that the TUNING indicator lights up.**

3 **Press – or + repeatedly until the desired station appears.**

Indicator on the display

TUNED: Appears when a station of sufficient signal strength is tuned in.
STEREO: Appears when an FM stereo program of sufficient signal strength is received.

Antenna adjustment A

For MW and LW (SW) reception, find the best location for the supplied AM loop antenna.

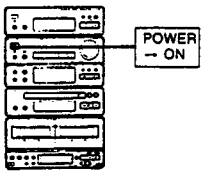

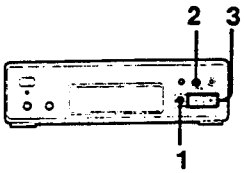

1

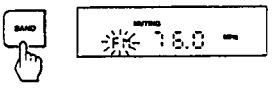

2

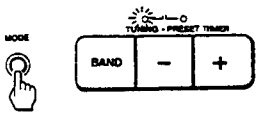

3

A

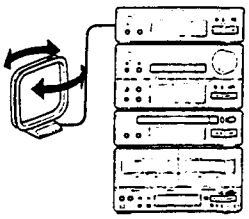

SECTION 2
GENERAL

This section is extracted from instruction manual.

Parts Identification

Refer to the pages indicated in ● for use of the buttons.

Tuner Section A

1. Display window
2. CLOCK SET button 24
3. TIMER SELECT button 117
4. TIMER SET button 119
5. MEMORY/NEXT button 25 60 117
6. MODE button 58 62
7. STEREO/MONO (stereo/monaural) button
8. TUNING PRESET/TIMER –/+ buttons
9. BAND selector 58

A

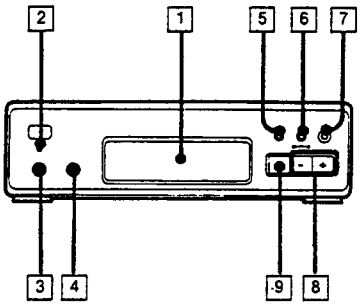

Radio

Storing Stations

You can store up to 20 FM stations and 10 MW stations and 10 LW (SW) stations in a desired sequence, so that you can tune in the stored station directly by entering the preset station number.
This operation is not possible with the remote commander.

1 Tune in the desired station.

2 Press MEMORY/NEXT.
"MEMORY" and the preset station numbers appear on the display.

3 While "MEMORY" is on (for several seconds), press – or + to select a desired preset number.

4 Press MEMORY/NEXT.
"MEMORY" disappears, and the station is stored.

Repeat step 1 to 4 for each station to be stored.

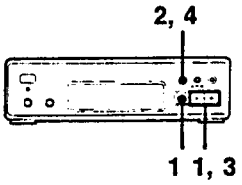

1

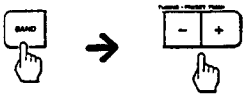

2

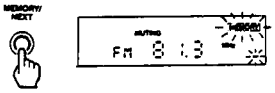

3

4

If you cannot store a station successfully
Press MEMORY/NEXT again so that "MEMORY" appears, and then proceed with steps 3 and 4 above.
Be sure to operate while "MEMORY" is on (about 4 seconds).

When you have selected the wrong preset station number
Press MEMORY/NEXT again and then proceed with the steps 3 and 4.

To change the preset station
Store a desired station at the desired preset number by proceeding with the above steps.
The station previously preset will be erased.
Erasing only is not possible.

Radio

To Tune in a Preset Station

Notes:
- When you use the remote commander for the following operations make sure that the display of the remote commander shows "TUNER" If not, press TUNER on the remote commander.
- You cannot operate the buttons on the lid if the lid is open.

1 Press BAND to select a desired band.

2 Press MODE so that the PRESET indicator lights up.

3 Press – or + (◀ or ▶ on the remote commander) to select the desired preset station number.

To tune in a preset station directly

Possible only with the remote commander.
1 Press BAND to select a desired band.
2 Press the numeric buttons to select the desired preset station number.

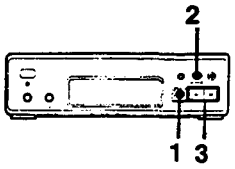

1

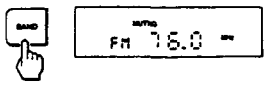

2

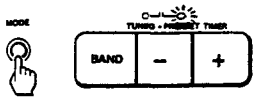

3

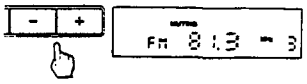

SECTION 3
ELECTRICAL ADJUSTMENTS

PRECAUTIONS IN REPAIRING

If the front end unit fails, it is difficult to repair the inner circuits, so replace the entire front end unit.

FM SECTION

FM DISCRIMINATOR ALIGNMENT (NULL CHECK)

Setting :

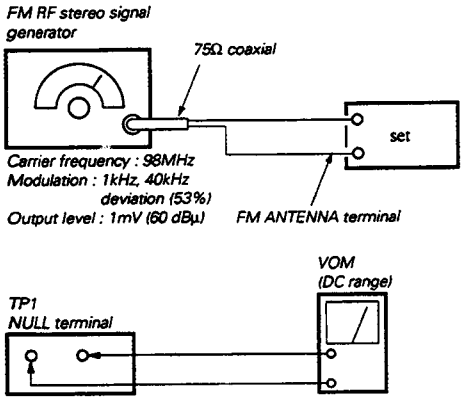

Procedure :

1. Tune the set to 98MHz.
2. Adjust T21 for 0V reading on the VOM.

Note : FM TUNING LEVEL adjustment shoud be made after FM discriminator alignment.

FM TUNING LEVEL ADJUSTMENT

Setting :

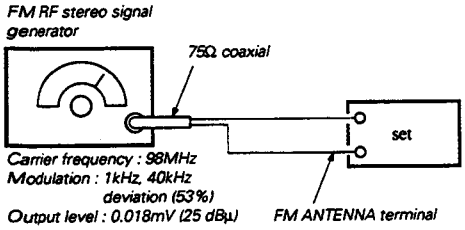

Procedure :

1. Tune the set to 98MHz.
2. Adjust T24 so that the TUNED LED goes on.

FM STEREO SEPARATION ADJUSTMENT

Setting :

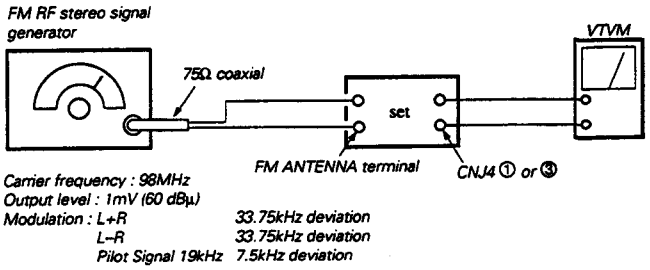

Procedure :
Tune the set to 98MHz.

FM stereo Signal generator Output channel	VTVM connection	VTVM reading (dB)
L-CH	L-CH	Ⓐ
R-CH	L-CH	Ⓑ Adjust RV21 for minimum reading.
R-CH	R-CH	Ⓒ
L-CH	R-CH	Ⓓ Adjust RV21 for minimum reading.

L-CH Stereo separation : Ⓐ – Ⓑ
R-CH Stereo separetion : Ⓒ – Ⓓ

The separations of both channels should be equal.

AM SECTION

AM TUNING LEVEL ADJUSTMENT

Setting :

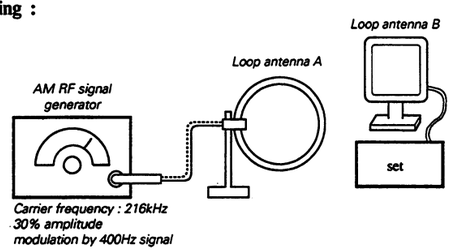

Procedure :

1. Set loop antenna A so that the loop antenna B input level becomes 2.5mV (68dB/m).
2. Tune the set to 216kHz.
3. Adjust the RV22 so that the TUNED LED goes on.

[PARTS ARRANGEMENT DIAGRAM FOR ADJUSTMENT]

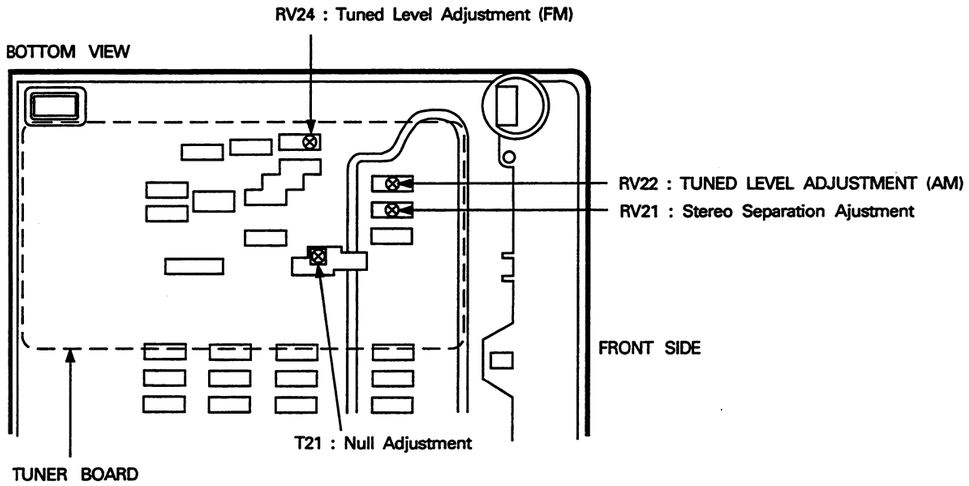

ST-H3600/H6600

SECTION 4
DIAGRAMS

4-1. BLOCK DIAGRAM

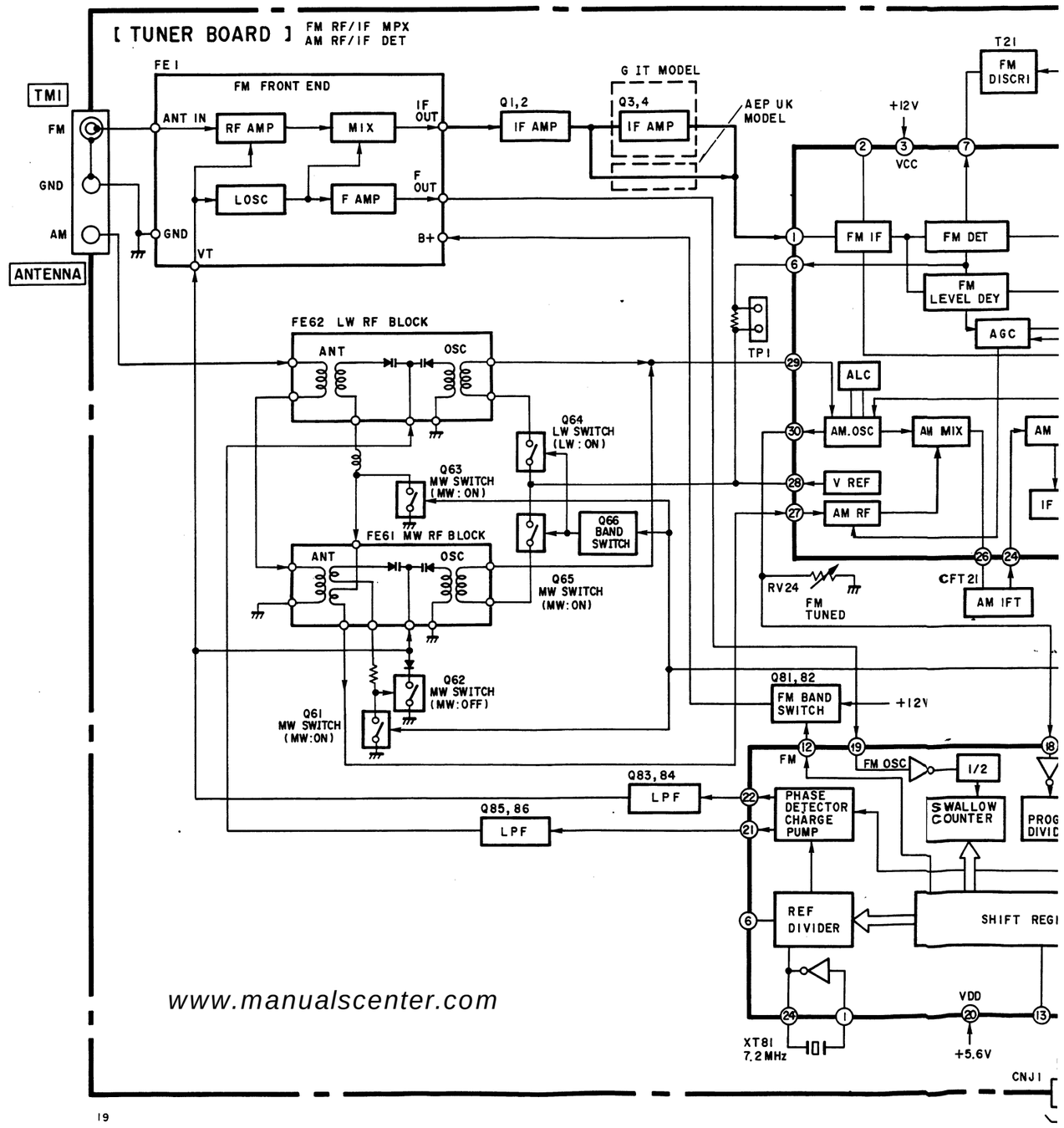

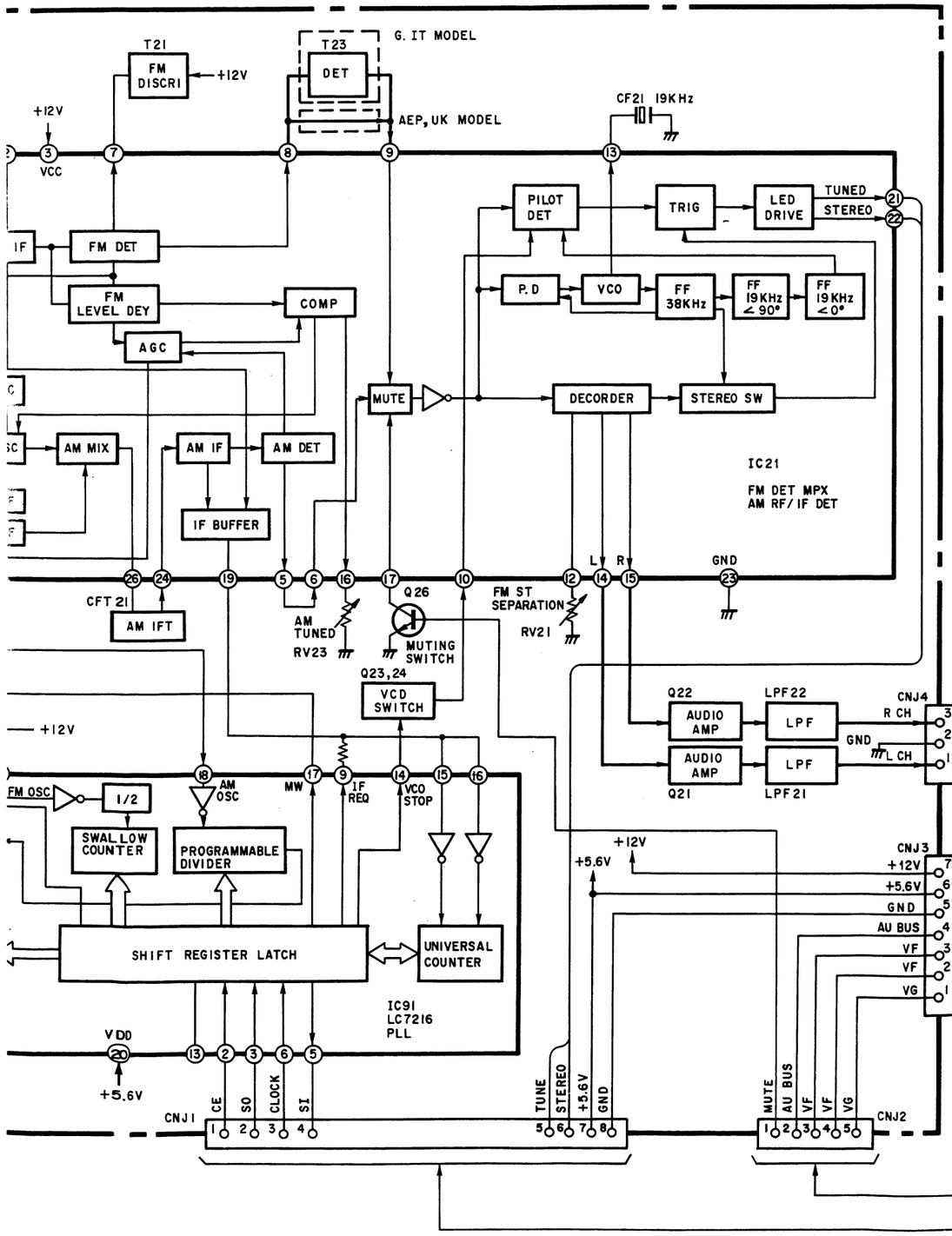
T21
FM DISCRI
+12V
T23
DET
G. IT MODEL
AEP, UK MODEL
CF21 19KHz
VCC
PILOT DET
TRIG
LED DRIVE
TUNED
STEREO
FM DET
FM LEVEL DEY
COMP
AGC
P.D
VCO
FF 38KHz
FF 19KHz ∠90°
FF 19KHz ∠0°
MUTE
DECORDER
STEREO SW
AM MIX
AM IF
AM DET
IF BUFFER
IC21
FM DET MPX
AM RF/IF DET
GND
CFT 21
AM IFT
AM TUNED
RV23
Q26
MUTING SWITCH
FM ST SEPARATION
RV21
Q23,24
VCD SWITCH
Q22
AUDIO AMP
LPF22
LPF
CNJ4
R CH
L CH
Q21
LPF21
FM OSC
1/2
AM OSC
MW
IF REQ
VCO STOP
SWALLOW COUNTER
PROGRAMMABLE DIVIDER
CNJ3
+12V
+5.6V
GND
AU BUS
VF
VG
SHIFT REGISTER LATCH
UNIVERSAL COUNTER
IC91
LC7216
PLL
VDD
CE
SO
CLOCK
SI
TUNE
MUTE
CNJ1
CNJ2

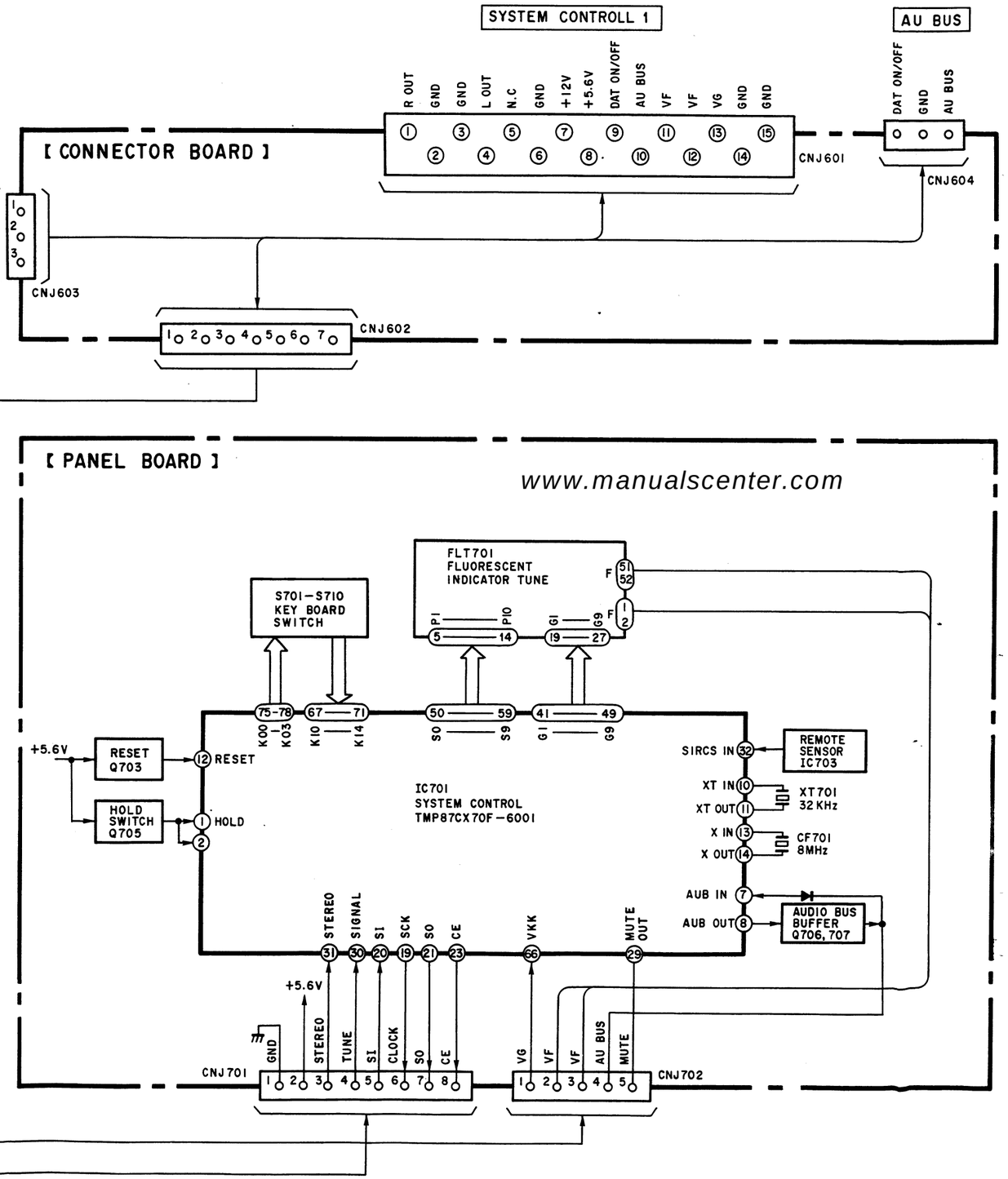
SYSTEM CONTROLL 1
AU BUS
R OUT
GND
L OUT
N.C
+12V
+5.6V
DAT ON/OFF
AU BUS
VF
VG
CNJ601
CNJ604
[CONNECTOR BOARD]
CNJ603
CNJ602
[PANEL BOARD]
www.manualscenter.com
FLT701
FLUORESCENT INDICATOR TUNE
S701-S710
KEY BOARD SWITCH
RESET Q703
HOLD SWITCH Q705
RESET
HOLD
IC701
SYSTEM CONTROL
TMP87CX70F-6001
REMOTE SENSOR IC703
SIRCS IN
XT IN
XT OUT
X IN
X OUT
XT701 32KHz
CF701 8MHz
AUB IN
AUB OUT
AUDIO BUS BUFFER Q706, 707
STEREO
SIGNAL
SI
SCK
SO
CE
VKK
MUTE OUT
GND
TUNE
CLOCK
CNJ701
CNJ702

4-2. SEMICONDUCTOR LEAD LAYOUTS

DTA114ES
DTC114ES
2SC2603-EF
2SC2669-OY
2SC3113-AB

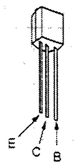

2SK246-GR3

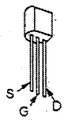

UZ-4.3BSA
1SS120

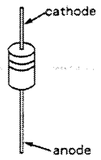

2SA1175-HFE
2SC2785-HFE

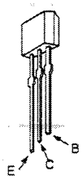

SEL2210S-D

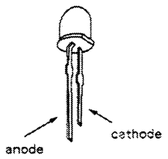

2SA1317-SU
2SC3330-T

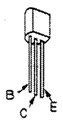

● SEMICONDUCTOR LOCATION

Ref. No	Location	
	H3600	H6600
D61	D – 4	D – 4
D701	G – 4	B – 5
D702	G – 4	B – 2
D707	H – 4	B – 3
D710	G – 2	B – 2
D711	G – 3	B – 3
D712	G – 7	A – 9
D714	G – 9	B – 5
D715	G – 10	B – 9
D716	G – 9	B – 9
D717	G – 8	A – 9
D718	G – 8	B – 2
IC21	C – 5	C – 5
IC81	C – 5	C – 5
IC701	G – 6	B – 6
IC702	G – 9	B – 9
IC703	G – 7	B – 9
Q1	C – 3	C – 3
Q2	C – 4	C – 4
Q3	C – 4	C – 4
Q4	C – 4	C – 4
Q21	C – 7	C – 7
Q22	C – 7	C – 7
Q23	C – 4	C – 4
Q24	C – 4	C – 4
Q26	E – 7	E – 7
Q61	D – 4	D – 4
Q62	D – 4	D – 4
Q63	D – 4	D – 4
Q64	D – 3	D – 3
Q65	D – 5	D – 5
Q66	D – 4	D – 4
Q81	C – 5	C – 5
Q82	C – 5	C – 5
Q701	G – 3	A – 2
Q702	F – 3	A – 2
Q703	G – 8	B – 8
Q705	H – 9	B – 8
Q706	G – 8	B – 9
Q707	G – 9	B – 9

4-3. PRINTED WIRING BOARD – TUNER SECTION –

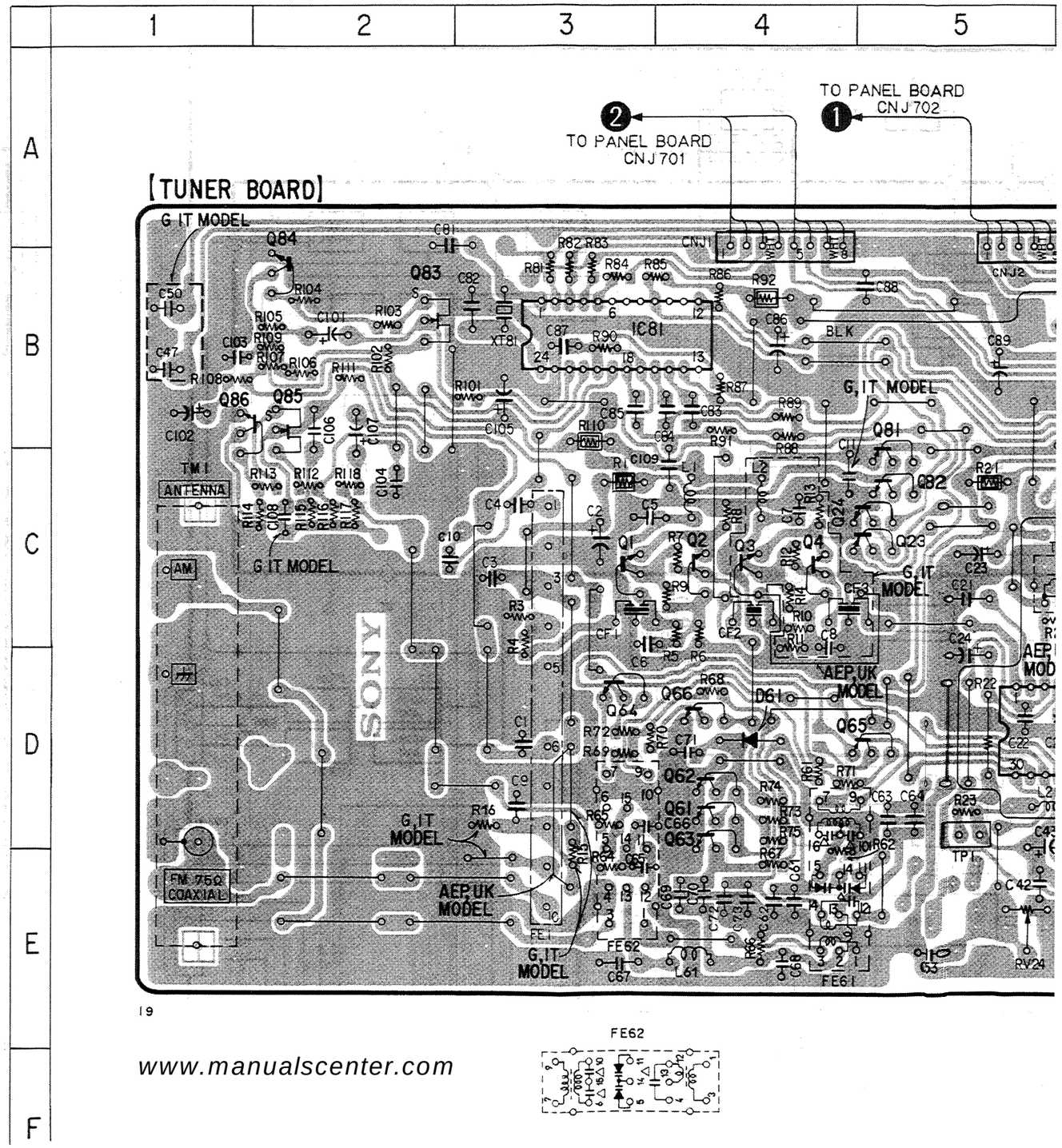

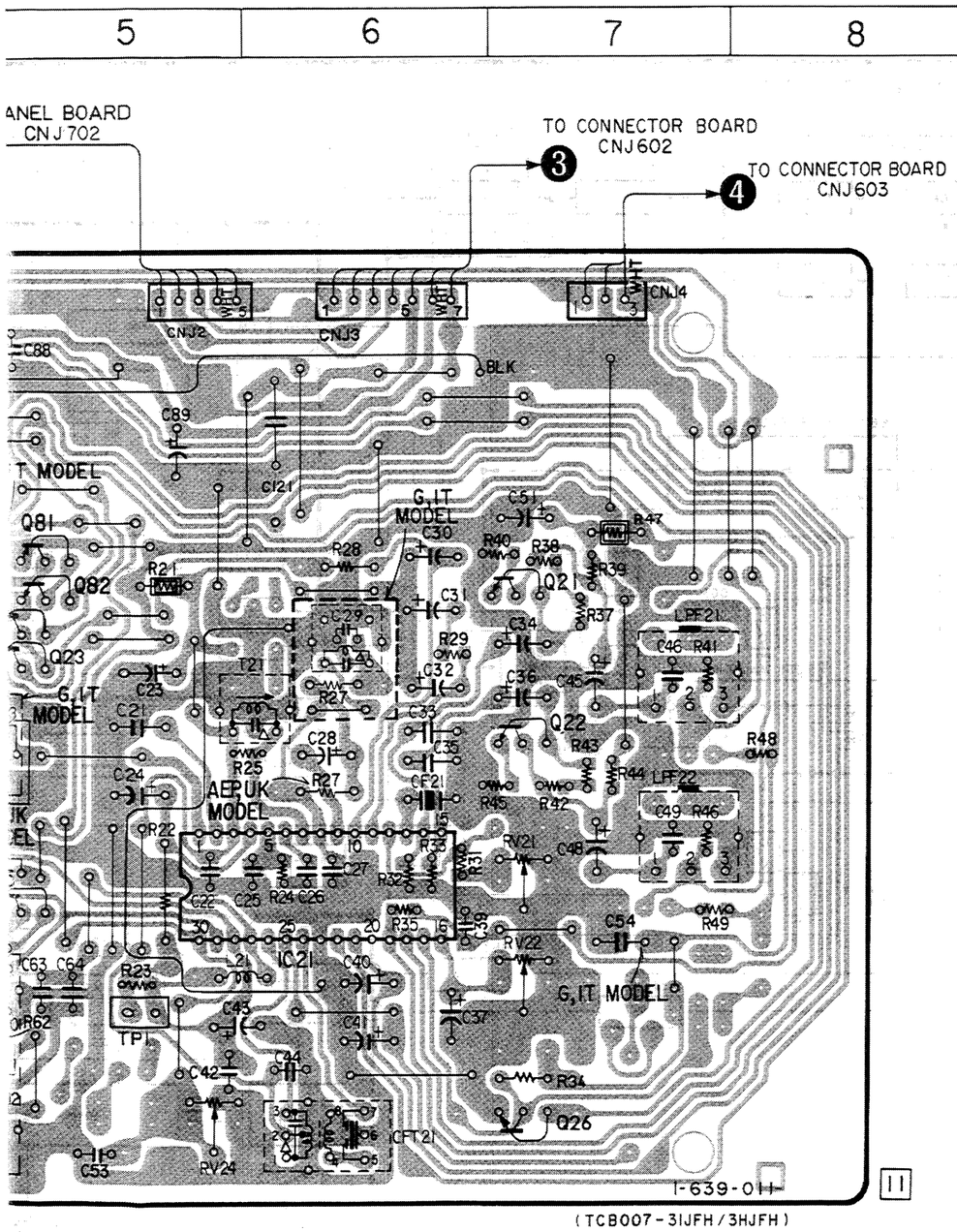

(TCB007-3IJFH/3HJFH)

【CONNECTOR BOARD】

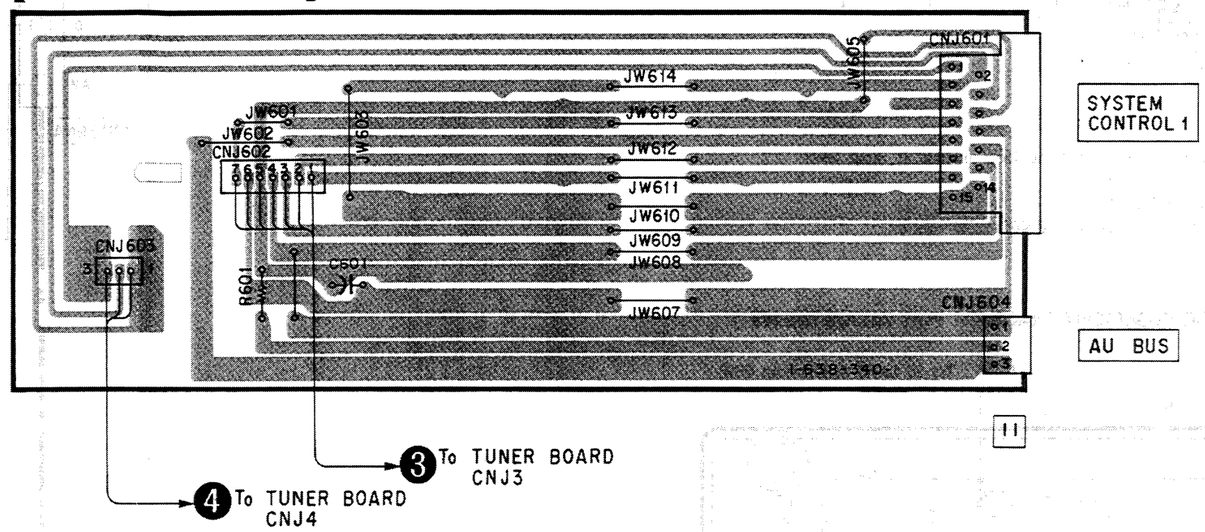

Note for schematic diagram:

- ○——— : indicated a lead wire mounted on the component side.
- ⊡— : indicates side identified with part number.
- All capacitors are in µF unless otherwise noted. pF: µµF 50WV or less are not indicated except for electrolytics and tantalums.
- All resistors are in ohms, 1/4W or less unless otherwise noted.
- △ : internal component.
- ▭ : nonflammable resistor

The components identified by mark ⚠ or dotted line with mark ⚠ are critical for safety.
Replace only with part number specified.

- ▭ : adjustment for repair.
- Voltage and waveforms are dc with respect to ground under no -signal (detuned) conditions.

no mark : FM
( ) : MW
< > : LW

- Voltages are taken with a VOM (input impedance 10MΩ). Voltage variations may be noted due to normal production tolerances.
- Signal path
  ⇨ : FM
- G : Germany Model
- IT : Itarian Model

4-4. SCHEMATIC DIAGRAM – TUNER SECTION –

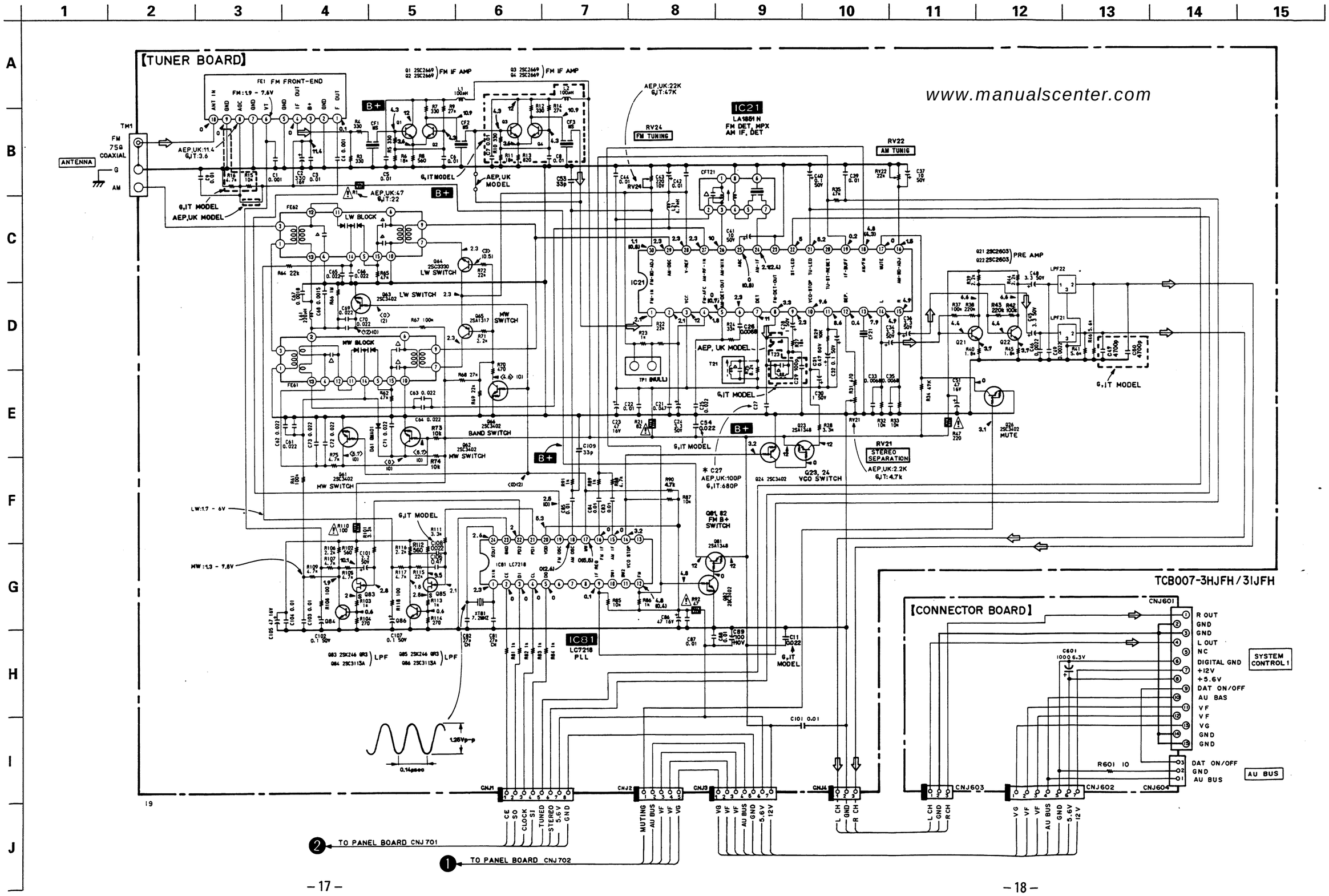

4-5. PRINTED WIRING BOARD – DISPLAY SECTION –

• See page 13 for semiconductor Location.

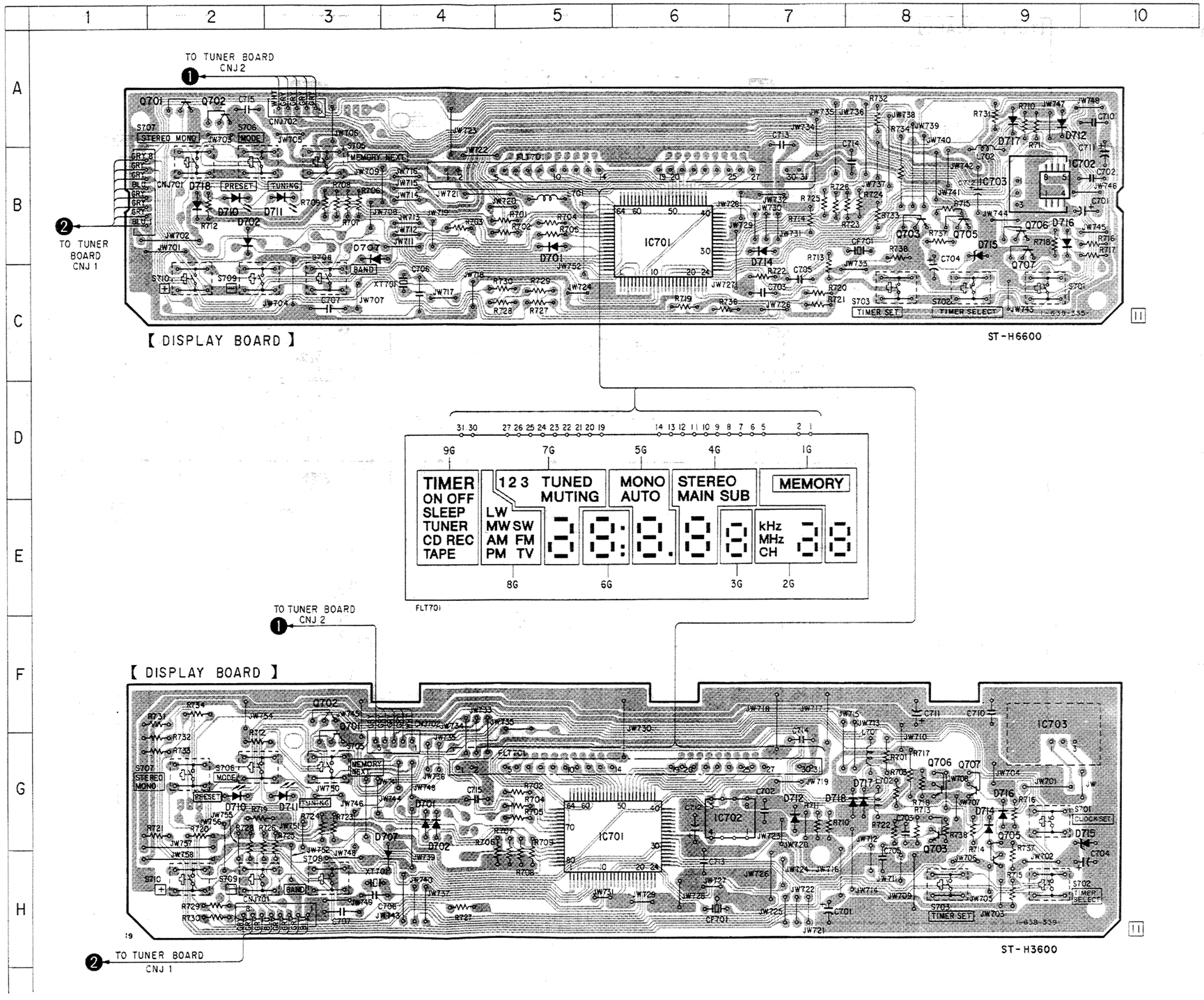

4-6. SCHEMATIC DIAGRAM – DISPLAY SECTION –

• See page 16 for note.

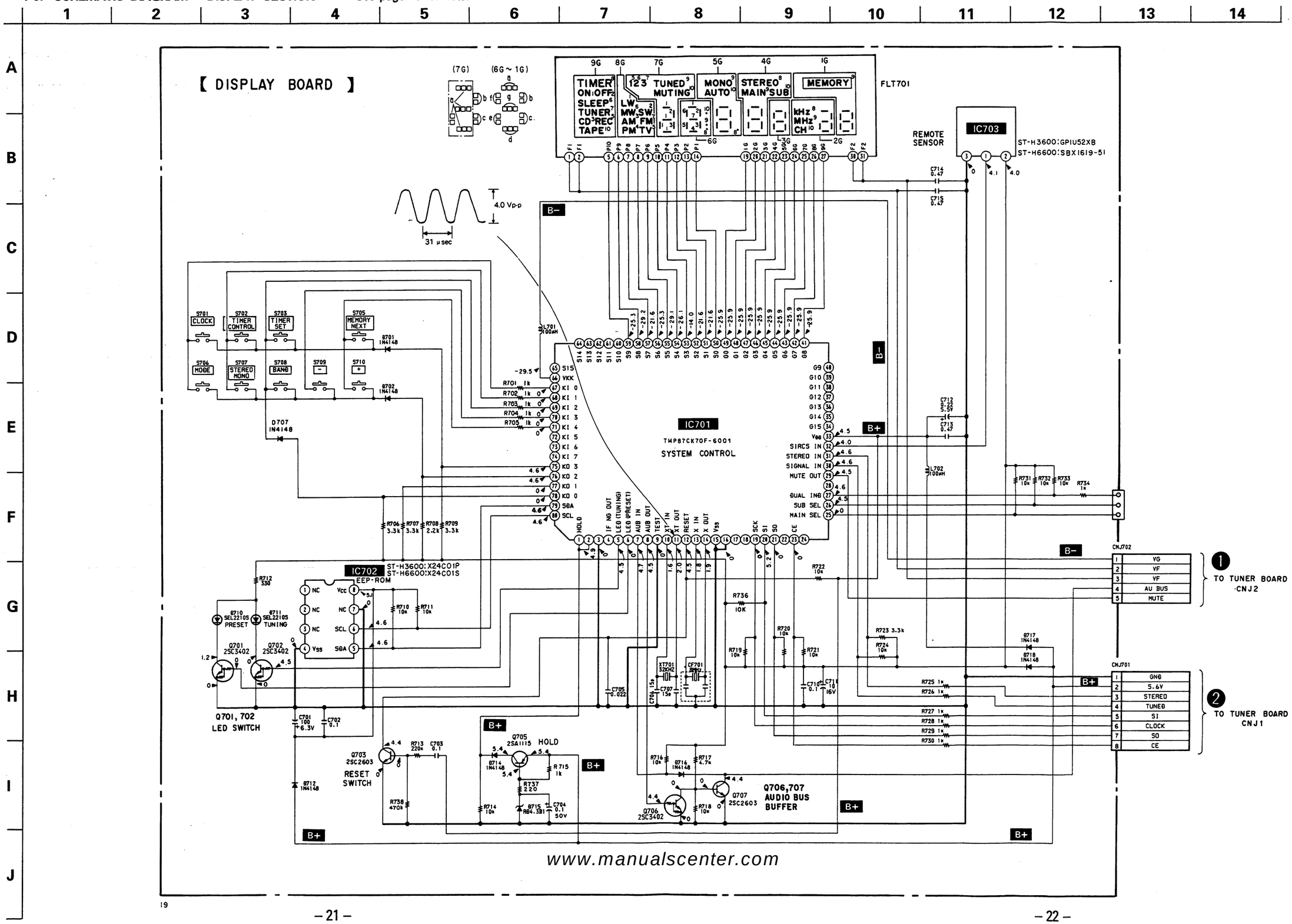

4-7. IC BLOCK DIAGRAMS

IC21 LA1851N

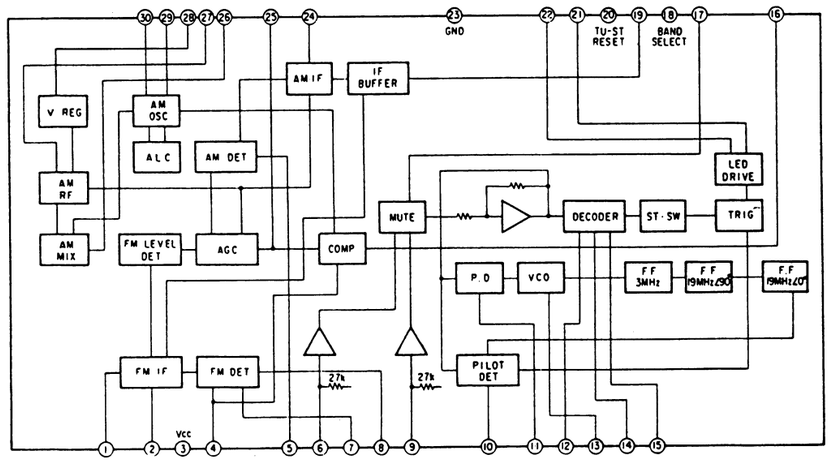

IC81 LC7218

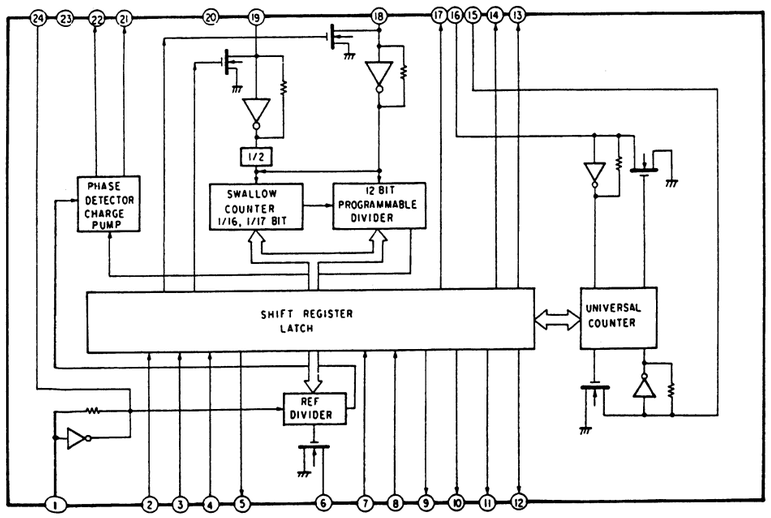

4-8. PIN FUNCTION OF IC701 SYSTEM CONTROLLER (TMP87CK70F-6001)

The terminals work to control tuner section (IC21, 81), FL tube display and reading and writing of IC702 (preset data), etc. according to key input and signal from the remote controller.

PIN No.	PIN NAME	I/O	ACTIVE	PIN FUNCTION
1	HOLD	I	↓	HOLD detecting interrupt terminal
2	HOLD RESET	I	↑	HOLD resetting interrupt terminal
3		I		Not in use
4	IF NGOUT	O	H	IF count NG output
5	LED1	O	H	TUNING LED ON
6	LED2	O	H	PRESET LED ON
7	AUB IN	I	L	AUDIO BUS input
8	AUB OUT	O	L	AUDIO BUS output
9	TEST	I	H	Test terminal
10	XT IN	I		Low frequency oscillator connection terminal (32KHz)
11	XT OUT	O		Low frequency oscillator connection terminal (32KHz)
12	RESET	I	L	Reset signal input
13	X IN	I		High frequency oscillator connection terminal (8MHz)
14	X OUT	O		High frequency oscillator connection terminal (8MHz)
15	VSS			GND
16		I		Not in use
17, 18		O		Not in use
19	SCK	O		PLL serial clock output
20	SI	I		PLL serial data input
21	SO	O		PLL serial data output
22				Not in use
23	CE	O	H	PLL chip enable
24				Not in use
25	MAIN SEL	O	L	Main sound selection terminal (Not in use)
26	SUB SEL	O	L	Sub sound selection terminal (Not in use)
27	DUAL IND	I	L	Sound dual signal detection terminal (Not in use)
28				Not in use
29	MUTE OUT	O	L	MUTING output
30	SIGNAL IN	I	L	TUNED input
31	STEREO IN	I	L	STEREO input
32	SIRCS IN	I	L	SIRCS input
33	VDD			+5V
34 - 40		O		Not in use
41 - 49	G0 - G8	O	H	FL tube digit output
50 - 59	S0 - S9	O	H	FL tube segment output
60 - 65		O	H	Not in use
66	VKK			FL tube driving power supply
67 - 71	KI0 - KI4	I	H	Key input
72		I		Not in use
73, 74				Not in use
75 - 78	KO0 - KO3	O	H	Key output
79	SDA	I/O		Data input/output for EEPROM
80	SCL	O		Clock output for EEPROM

SECTION 5
EXPLODED VIEW

NOTE:
- -XX, -X mean standardized parts, so they may have some differences from the original one.
- Color Indication of Appearance Parts
  Example:
  KNOB,BALANCE(WHITE)...(RED)
  ↑ Parts color ↑ Cabinet's color
- Items marked "*" are not stocked since they are seldom required for routine service. Some delay should be anticipated when ordering these items.
- The mechanical parts with no reference number in the exploded views are not supplied.

The components identified by mark ⚠ or dotted line with mark ⚠ are critical for safety.
Replace only with part number specified.

(1) CHASSIS SECTION

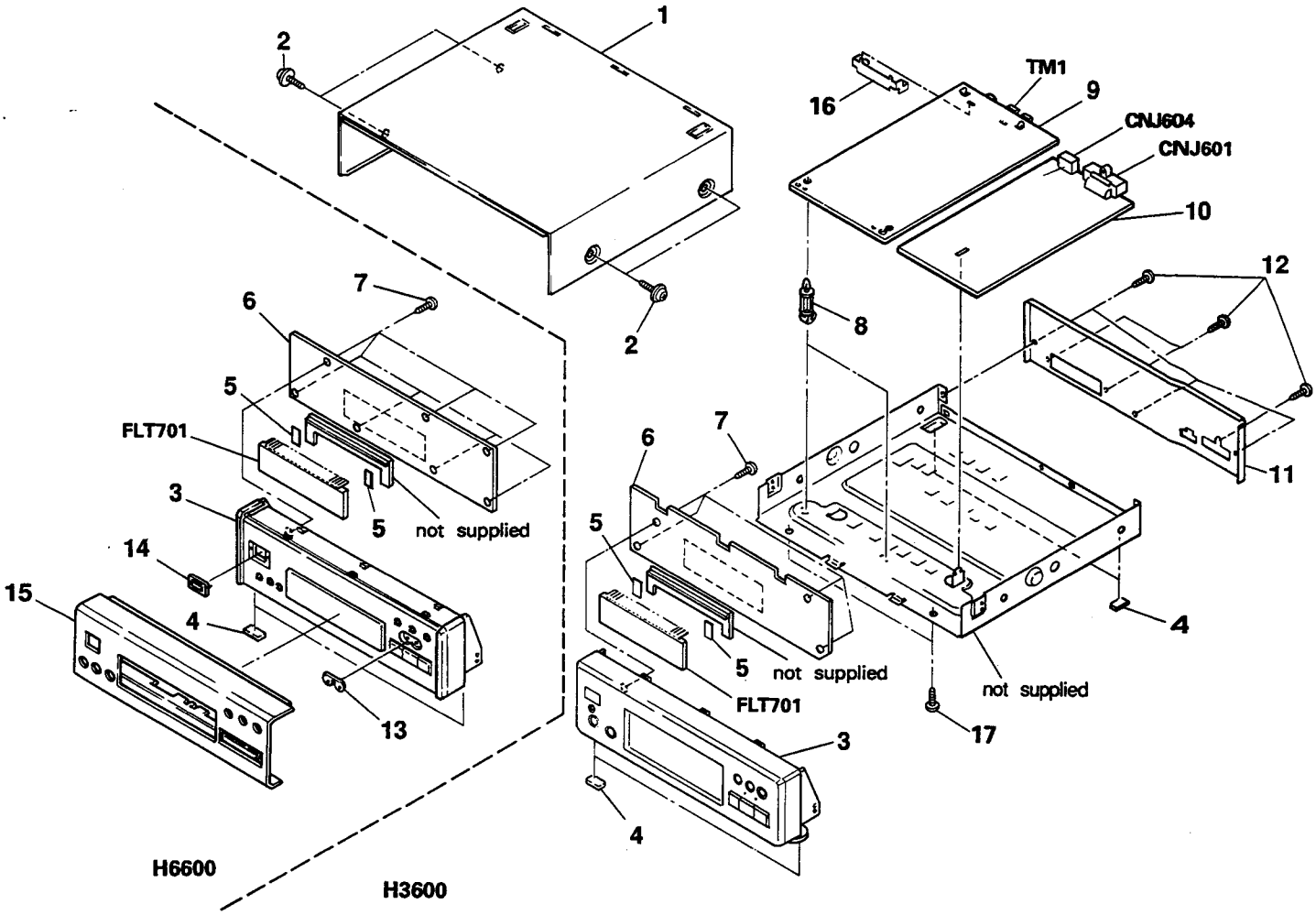

Ref. No.	Part No.	Description	Remarks
1	4-944-423-11	CASE (K206522) (H3600)	
	4-932-844-01	CASE (H6600)	
2	3-363-099-01	SCREW (CASE +3X8 TP2)	
3	X-4941-544-1	PANEL ASSY, ASSY (H3600)	
	X-4942-523-1	PANEL ASSY, ASSY (H6600)	
4	4-930-336-01	FOOT (FELT)	
5	* 4-932-810-11	CUSHION (FL)	
6	* A-4341-562-A	DISPLAY BOARD, COMPLETE (H3600: AEP, UK)	
	* A-4341-563-A	DISPLAY BOARD, COMPLETE (H3600: G, IT)	
	* A-4341-554-A	DISPLAY BOARD, COMPLETE (H6600: AEP, UK)	
	* A-4341-556-A	DISPLAY BOARD, COMPLETE (H6600: G, IT)	
7	7-685-534-19	SCREW +BTP 2.6X8 TYPE2 N-S	
8	* 4-914-008-01	HOLDER, PCB	
9	A-4303-367-A	TUNER BOARD(TCB007-3HJFH), COMPLETE(AEP, UK)	
	A-4303-368-A	TUNER BOARD(TCB007-3IJFH), COMPLETE(G, IT)	
10	1-638-340-11	CONNECTOR BOARD (H3600)	
	1-638-336-11	CONNECTOR BOARD (H6600)	
11	* 4-942-893-51	PANEL, BACK (H3600: AEP, UK)	
	* 4-942-893-81	PANEL, BACK (H3600: G)	
	* 4-942-893-91	PANEL, BACK (H3600: IT)	
	* 4-942-893-01	PANEL, BACK (H6600: AEP, UK)	
	* 4-942-893-31	PANEL, BACK (H6600: G)	
	* 4-942-893-41	PANEL, BACK (H6600: IT)	
12	7-685-647-79	SCREW +BVTP 3X10 TYPE2 N-S	
13	4-944-427-01	INDICATOR (H6600)	
14	4-944-425-01	FILTER (H6600)	
15	4-944-429-11	PANEL (ST), FRONT (H6600)	
16	* 4-924-988-11	PLATE (ST), GROUND	
17	7-682-547-09	SCREW +BVTT 3X6(S) (H6600)	

SECTION 6
ELECTRICAL PARTS LIST

TUNER

NOTE:

The components identified by mark ⚠ or dotted line with mark ⚠ are critical for safety.
Replace only with part number specified.

When indicating parts by reference number, please include the board name.

- Due to standardization, replacements in the parts list may be different from the parts specified in the diagrams or the components used on the set.
- -XX, -X mean standardized parts, so they may have some difference from the original one.
- RESISTORS
  All resistors are in ohms
  METAL : Metal-film resistor
  METAL OXIDE : Metal Oxide-film resistor
  F : nonflammable
- Items marked "*" are not stocked since they are seldom required for routine service. Some delay should be anticipated when ordering these items.
- SEMICONDUCTORS
  In each case, u : µ, for example :
  uA...: µA..., uPA...: µPA...,
  uPB...: µPB..., uPC...: µPC...,
  uPD...: µPD...
- CAPACITORS
  uF :µF
- COILS
  uH : µH

Ref. No.	Part No.	Description				Remarks
	A-4303-367-A	TUNER BOARD(TCB007-3HJFH), COMPLETE(AEP, UK)				
	A-4303-368-A	TUNER BOARD(TCB007-3IJFH), COMPLETE(G, IT)				
		**********				
*	4-324-988-11	PLATE (ST), GROUND				
		(CAPACITOR)				
C1	1-162-294-11	CERAMIC CHIP	0.001uF	20%	25V	
C2	1-124-477-11	ELECT	330uF	20%	16V	
C3	1-163-059-00	CERAMIC MELF	0.01uF	20%	16V	
C4	1-162-294-31	CERAMIC CHIP	0.001uF	20%	25V	
C5	1-163-059-00	CERAMIC MELF	0.01uF	20%	16V	
C6	1-163-059-00	CERAMIC MELF	0.01uF	20%	16V	
C7	1-163-059-00	CERAMIC MELF	0.01uF	20%	16V	(G, IT)
C8	1-163-059-00	CERAMIC MELF	0.01uF	20%	16V	(G, IT)
C9	1-163-059-00	CERAMIC MELF	0.01uF	20%	16V	
C11	1-101-005-00	CERAMIC	0.022uF		50V	(G, IT)
C21	1-101-006-00	CERAMIC	0.047uF		50V	
C22	1-163-059-00	CERAMIC MELF	0.01uF	20%	16V	
C23	1-124-477-11	ELECT	47uF	20%	25V	
C24	1-123-382-00	ELECT	3.3uF	20%	100V	
C25	1-163-063-00	CERAMIC MELF	0.022uF		25V	
C26	1-163-019-00	CERAMIC CHIP	0.0068uF	20%	12V	
C27	1-162-516-11	CERAMIC CHIP	100pF	10%	50V	(AEP, UK)
C27	1-163-007-11	CERAMIC CHIP	680pF	20%	50V	(G, IT)
C28	1-124-903-11	ELECT	1.0uF	20%	50V	
C29	1-162-516-11	CERAMIC CHIP	100pF	10%	50V	(G, IT)
C30	1-124-903-11	ELECT	1.0uF	20%	50V	
C31	1-124-902-00	ELECT	0.47uF	20%	50V	
C32	1-124-463-00	ELECT	0.1uF	20%	50V	
C33	1-130-481-00	MYLAR	0.0068uF	5%	50V	
C34	1-123-382-00	ELECT	3.3uF	20%	100V	
C35	1-130-481-00	MYLAR	0.0068uF	5%	50V	
C36	1-123-382-00	ELECT	3.3uF	20%	100V	
C37	1-124-907-11	ELECT	10uF	20%	50V	
C39	1-163-059-00	CERAMIC MELF	0.01uF	20%	16V	
C40	1-124-463-00	ELECT	0.1uF	20%	50V	
C41	1-124-907-11	ELECT	10uF	20%	50V	
C42	1-163-059-00	CERAMIC MELF	0.01uF	20%	16V	
C43	1-126-176-11	ELECT	220uF	20%	10V	
C44	1-163-059-00	CERAMIC MELF	0.01uF	20%	16V	
C45	1-123-382-00	ELECT	3.3uF	20%	100V	
C46	1-161-375-00	CERAMIC CHIP	0.0022uF	20%	25V	
C47	1-163-170-00	CERAMIC CHIP	0.0047uF	20%	25V	(G, IT)
C48	1-123-382-00	ELECT	3.3uF	20%	100V	
C49	1-161-375-00	CERAMIC CHIP	0.0022uF	20%	25V	
C50	1-163-170-00	CERAMIC CHIP	0.0047uF	20%	25V	(G, IT)
C51	1-124-477-11	ELECT	47uF	20%	25V	
C53	1-163-105-00	CERAMIC CHIP	33pF	5%	50V	
C54	1-101-005-00	CERAMIC	0.022uF		50V	(G, IT)
C61	1-163-063-00	CERAMIC MELF	0.022uF		25V	
C62	1-163-063-00	CERAMIC MELF	0.022uF		25V	
C63	1-163-063-00	CERAMIC MELF	0.022uF		25V	
C64	1-163-063-00	CERAMIC MELF	0.022uF		25V	
C65	1-163-063-00	CERAMIC MELF	0.022uF		25V	
C66	1-163-063-00	CERAMIC MELF	0.022uF		25V	
C67	1-102-120-00	CERAMIC	0.0018uF	10%	50V	
C68	1-163-111-11	CERAMIC CHIP	0.0015uF	20%	25V	
C69	1-163-063-00	CERAMIC MELF	0.022uF		25V	
C70	1-163-063-00	CERAMIC MELF	0.022uF		25V	
C71	1-163-063-00	CERAMIC MELF	0.022uF		25V	
C72	1-163-063-00	CERAMIC MELF	0.022uF		25V	
C73	1-163-063-00	CERAMIC MELF	0.022uF		25V	
C81	1-102-961-00	CERAMIC	27pF	5%	50V	
C82	1-102-961-00	CERAMIC	27pF	5%	50V	
C83	1-163-059-00	CERAMIC MELF	0.01uF	20%	16V	
C84	1-163-059-00	CERAMIC MELF	0.01uF	20%	16V	

TUNER

Ref. No.	Part No.	Description				Remarks
C85	1-163-059-00	CERAMIC MELF	0.01uF	20%	16V	
C86	1-124-477-11	ELECT	47uF	20%	25V	
C87	1-163-059-00	CERAMIC MELF	0.01uF	20%	16V	
C88	1-163-059-00	CERAMIC MELF	0.01uF	20%	16V	
C89	1-124-443-00	ELECT	100uF	20%	10V	
C101	1-124-925-11	ELECT	2.2uF	20%	100V	
C102	1-124-463-00	ELECT	0.1uF	20%	50V	
C103	1-163-059-00	CERAMIC MELF	0.01uF	20%	16V	
C104	1-163-059-00	CERAMIC MELF	0.01uF	20%	16V	
C105	1-124-477-11	ELECT	47uF	20%	25V	
C106	1-136-173-00	FILM	0.47uF	5%	50V	
C107	1-124-463-00	ELECT	0.1uF	20%	50V	
C108	1-163-063-00	CERAMIC MELF	0.022uF		25V	(G, IT)
C109	1-162-211-31	CERAMIC	33pF	5%	50V	
C121	1-161-379-00	CERAMIC	0.01uF	30%	16V	(G, IT)
		(FILTER)				
CF1	1-567-389-11	FILTER, CERAMIC				
CF2	1-567-389-11	FILTER, CERAMIC				
CF3	1-567-389-11	FILTER, CERAMIC (G, IT)				
		(OSCILLATOR)				
CF21	1-577-075-11	OSCILLATOR, CERAMIC (19KHz)				
		(IF TRANSFORMER)				
CFT21	1-404-853-11	TRANSFORMER, IF (CERAMIC FILTER)				
		(CONNECTOR)				
CNJ1	* 1-564-342-11	SOCKET, CONNECTOR 8P				
CNJ2	* 1-564-339-00	PIN, CONNECTOR 5P				
CNJ3	* 1-564-341-11	PIN, CONNECTOR 7P				
CNJ4	* 1-564-337-00	PIN, CONNECTOR 3P				
		(DIODE)				
D61	8-719-912-20	DIODE ISS120				
		(FM FRONT END)				
FE1	1-463-857-11	FRONT END, FM (G, IT)				
FE1	1-463-862-21	FRONT END, FM (AEP, UK)				
		(ENCAPSULATED COMPONENT)				
FE61	1-236-462-11	ENCAPSULATED COMPONENT (MW RF)				
FE62	1-236-463-11	ENCAPSULATED COMPONENT (LW RF)				
		(IC)				
IC21	8-759-821-45	IC LA1851N				
IC81	8-759-820-91	IC LC7218				

Ref. No.	Part No.	Description				Remarks
		(INDUCTOR)				
L1	1-410-645-31	MICRO INDUCTOR 100uH				
L2	1-410-645-31	MICRO INDUCTOR 100uH (G, IT)				
L21	1-407-500-00	MICRO INDUCTOR 4.7mH				
L61	1-410-525-11	MICRO INDUCTOR 220uH				
		(LOW PASS FILTER)				
LPF21	1-235-164-00	FILTER, LOW PASS				
LPF22	1-235-164-00	FILTER, LOW PASS				
		(TRANSISTOR)				
Q1	8-729-230-99	TRANSISTOR 2SC2669-OY				
Q2	8-729-230-99	TRANSISTOR 2SC2669-OY				
Q3	8-129-230-99	TRANSISTOR 2SC2669-OY (G, IT)				
Q4	8-129-230-99	TRANSISTOR 2SC2669-OY (G, IT)				
Q21	8-729-119-78	TRANSISTOR 2SC2785-HFE				
Q22	8-729-119-78	TRANSISTOR 2SC2785-HFE				
Q23	8-729-900-61	TRANSISTOR DTA114ES				
Q24	8-729-900-80	TRANSISTOR DTC114ES				
Q26	8-729-900-80	TRANSISTOR DTC114ES				
Q61	8-729-900-80	TRANSISTOR DTC114ES				
Q62	8-729-900-80	TRANSISTOR DTC114ES				
Q63	8-729-900-80	TRANSISTOR DTC114ES				
Q64	8-729-820-24	TRANSISTOR 2SC3330-T				
Q65	8-729-119-76	TRANSISTOR 2SA1175-HFE				
Q66	8-729-900-80	TRANSISTOR DTC114ES				
Q81	8-729-900-61	TRANSISTOR DTA114ES				
Q82	8-729-900-80	TRANSISTOR DTC114ES				
Q83	8-729-202-67	TRANSISTOR 2SK246GR3				
Q84	8-729-230-93	TRANSISTOR 2SC3113-AB				
Q85	8-729-202-67	TRANSISTOR 2SK246GR3				
Q86	8-729-230-93	TRANSISTOR 2SC3113-AB				
		(RESISTOR)				
R1	⚠ 1-249-397-11	CARBON (SMALL)	22	5%	1/4W F	(G, IT)
R1	⚠ 1-249-401-11	CARBON (SMALL)	47	5%	1/4W F	(AEP, UK)
R3	1-249-329-11	CARBON MELF	330	5%	1/8W	
R4	1-249-329-11	CARBON MELF	330	5%	1/8W	
R5	1-249-329-11	CARBON MELF	330	5%	1/8W	
R6	1-249-350-11	CARBON MELF	18K	5%	1/8W	
R7	1-249-329-11	CARBON MELF	330	5%	1/8W	
R8	1-249-332-11	CARBON MELF	560	5%	1/8W	
R9	1-249-352-11	CARBON MELF	27K	5%	1/8W	
R10	1-249-329-11	CARBON MELF	330	5%	1/8W	(G, IT)
R11	1-249-350-11	CARBON MELF	18K	5%	1/8W	(G, IT)
R12	1-249-329-11	CARBON MELF	330	5%	1/8W	(G, IT)
R13	1-249-334-11	CARBON MELF	820	5%	1/8W	(G, IT)
R14	1-249-352-11	CARBON MELF	27K	5%	1/8W	(G, IT)

The components identified by mark ⚠ or dotted line with mark ⚠ are critical for safety.
Replace only with part number specified.

When indicating parts by reference number, please include the board name.

TUNER CONNECTOR DISPLAY

Ref. No.		Part No.	Description				Remarks
R15		1-249-374-11	CARBON MELF	10K	5%	1/8W (G, IT)	
R16		1-249-343-11	CARBON MELF	4.7K	5%	1/8W (G, IT)	
R21	⚠	1-249-404-00	CARBON (SMALL)	82	5%	1/4W	F
R22		1-249-433-11	CARBON (SMALL)	22K	5%	1/4W	
R23		1-249-335-11	CARBON MELF	1K	5%	1/8W	
R24		1-249-353-11	CARBON MELF	33K	5%	1/8W	
R25		1-249-346-11	CARBON MELF	8.2K	5%	1/8W	
R27		1-249-432-11	CARBON (SMALL)	18K	5%	1/4W	
R28		1-249-423-11	CARBON (SMALL)	3.3K	5%	1/4W	
R29		1-249-347-11	CARBON MELF	10K	5%	1/8W	
R31		1-249-331-11	CARBON MELF	470	5%	1/8W	
R32		1-249-347-11	CARBON MELF	10K	5%	1/8W	
R33		1-249-347-11	CARBON MELF	10K	5%	1/8W	
R34		1-249-437-11	CARBON (SMALL)	47K	5%	1/4W	
R35		1-249-355-11	CARBON MELF	47K	5%	1/8W	
R37		1-249-359-11	CARBON MELF	100K	5%	1/8W	
R38		1-249-363-11	CARBON MELF	220K	5%	1/8W	
R39		1-249-339-11	CARBON MELF	2.2K	5%	1/8W	
R40		1-249-338-11	CARBON MELF	1.8K	5%	1/8W	
R41		1-249-344-11	CARBON MELF	5.6K	5%	1/8W	
R42		1-249-359-11	CARBON MELF	100K	5%	1/8W	
R43		1-249-363-11	CARBON MELF	220K	5%	1/8W	
R44		1-249-339-11	CARBON MELF	2.2K	5%	1/8W	
R45		1-249-338-11	CARBON MELF	1.8K	5%	1/8W	
R46		1-249-344-11	CARBON MELF	5.6K	5%	1/8W	
R47	⚠	1-249-409-11	CARBON (SMALL)	220	5%	1/4W	F
R48		1-249-359-11	CARBON MELF	100K	5%	1/8W	
R49		1-249-359-11	CARBON MELF	100K	5%	1/8W	
R61		1-249-359-11	CARBON MELF	100K	5%	1/8W	
R62		1-249-355-11	CARBON MELF	47K	5%	1/8W	
R64		1-249-351-11	CARBON MELF	22K	5%	1/8W	
R65		1-249-355-11	CARBON MELF	47K	5%	1/8W	
R66		1-215-493-00	CARBON MELF	1M	5%	1/5W	
R67		1-249-359-11	CARBON MELF	100K	5%	1/8W	
R68		1-249-352-11	CARBON MELF	27K	5%	1/8W	
R69		1-249-351-11	CARBON MELF	22K	5%	1/8W	
R70		1-249-331-11	CARBON MELF	470	5%	1/8W	
R71		1-249-339-11	CARBON MELF	2.2K	5%	1/8W	
R72		1-249-351-11	CARBON MELF	22K	5%	1/8W	
R73		1-249-347-11	CARBON MELF	10K	5%	1/8W	
R74		1-249-347-11	CARBON MELF	10K	5%	1/8W	
R75		1-249-343-11	CARBON MELF	4.7K	5%	1/8W	
R81		1-249-335-11	CARBON MELF	1K	5%	1/8W	
R82		1-249-335-11	CARBON MELF	1K	5%	1/8W	
R83		1-249-335-11	CARBON MELF	1K	5%	1/8W	
R84		1-249-335-11	CARBON MELF	1K	5%	1/8W	
R85		1-249-347-11	CARBON MELF	10K	5%	1/8W	
R86		1-249-335-11	CARBON MELF	1K	5%	1/8W	
R87		1-249-347-11	CARBON MELF	10K	5%	1/8W	
R88		1-249-343-11	CARBON MELF	4.7K	5%	1/8W	
R89		1-249-335-11	CARBON MELF	1K	5%	1/8W	
R90		1-249-343-11	CARBON MELF	4.7K	5%	1/8W	
R91		1-249-335-11	CARBON MELF	1K	5%	1/8W	
R92	⚠	1-249-401-11	CARBON (SMALL)	47	5%	1/4W	F
R101		1-249-341-11	CARBON MELF	3.3K	5%	1/8W	
R102		1-249-332-11	CARBON MELF	560	5%	1/8W	
R103		1-249-335-11	CARBON MELF	1K	5%	1/8W	
R104		1-249-328-11	CARBON MELF	270	5%	1/8W	
R105		1-249-343-11	CARBON MELF	4.7K	5%	1/8W	
R106		1-249-339-11	CARBON MELF	2.2K	5%	1/8W	
R107		1-249-343-11	CARBON MELF	4.7K	5%	1/8W	
R108		1-249-323-11	CARBON MELF	100	5%	1/8W	
R109		1-249-343-11	CARBON MELF	4.7K	5%	1/8W	
R110	⚠	1-249-405-11	CARBON (SMALL)	100	5%	1/4W	F
R111		1-249-341-11	CARBON MELF	3.3K	5%	1/8W	
R112		1-249-332-11	CARBON MELF	560	5%	1/8W	
R113		1-249-335-11	CARBON MELF	1K	5%	1/8W	
R114		1-249-328-11	CARBON MELF	270	5%	1/8W	
R115		1-249-351-11	CARBON MELF	22K	5%	1/8W	
R116		1-249-339-11	CARBON MELF	2.2K	5%	1/8W	
R117		1-249-343-11	CARBON MELF	4.7K	5%	1/8W	
R118		1-249-323-11	CARBON MELF	100	5%	1/8W	
			(VARIABLE RESISTOR)				
RV21		1-238-598-11	RES, ADJ, CARBON 2.2K (AEP, UK)				
RV21		1-238-599-11	RES, ADJ, CARBON 4.7K (G, IT)				
RV22		1-238-601-11	RES, ADJ, CARBON 22K				
RV24		1-238-601-11	RES, ADJ, CARBON 22K (AEP, UK)				
RV24		1-238-602-11	RES, ADJ, CARBON 47K (G, IT)				
			(TRANSFORMER)				
T21		1-404-807-11	TRANSFORMER, DISCRIMINATOR				
T23		1-236-465-11	ENCAPSULATED COMPONENT (G, IT)				
			(TERMINAL)				
TM1	*	1-537-138-31	TERMINAL BOARD (ANTENNA)				
			(CONNECTOR PIN)				
TP1	*	1-560-060-00	PIN, CONNECTOR 2P				
			(CRYSTAL VIBRATOR)				
XT81		1-577-126-11	VIBRATOR, CRYSTAL (7.2MHz)				

****

1-638-340-11 CONNECTOR BOARD (H3600)
1-638-336-11 CONNECTOR BOARD (H6600)
****

The components identified by mark ⚠ or dotted line with mark ⚠ are critical for safety.
Replace only with part number specified.

When indicating parts by reference number, please include the board name.

CONNECTOR DISPLAY

Ref. No.	Part No.	Description				Remarks
	* A-4341-562-A	DISPLAY BOARD, COMPLETE (H3600: AEP, UK)				
	* A-4341-563-A	DISPLAY BOARD, COMPLETE (H3600: G, IT)				
	* A-4341-554-A	DISPLAY BOARD, COMPLETE (H6600: AEP, UK)				
	* A-4341-556-A	DISPLAY BOARD, COMPLETE (H6600: G, IT)				
		**********				
	* 4-932-810-11	CUSHION (FL)				
		〈 CAPACITOR 〉				
C601	1-124-471-00	ELECT	1000uF	20%	6.3V	
C701	1-126-177-11	ELECT	100uF	20%	10V	
C702	1-164-159-11	CERAMIC	0.1uF		50V	
C703	1-164-159-11	CERAMIC	0.1uF		50V	
C704	1-124-463-00	ELECT	0.1uF	20%	50V	
C705	1-161-494-00	CERAMIC	0.022uF		25V	
C706	1-162-203-31	CERAMIC	15PF	5%	50V	
C707	1-162-203-31	CERAMIC	15PF	5%	50V	
C710	1-164-159-11	CERAMIC	0.1uF		50V	
C711	1-126-157-11	ELECT	10uF	20%	16V	
C712	1-125-624-11	DUBLE LAYERS	0.22F		5.5V	
C713	1-136-173-00	FILM	0.47uF	5%	50V	
C714	1-136-173-00	FILM	0.47uF	5%	50V	
C715	1-136-173-00	FILM	0.47uF	5%	50V	
		〈 CERAMIC VIBRATOR 〉				
CF701	1-579-125-11	VIBRATOR, CERAMIC (8MHz)				
		〈 CONNECTOR 〉				
CNJ601	* 1-566-859-11	SOCKET, CONNECTOR 15P				
CNJ602	* 1-564-341-11	PIN, CONNECTOR 7P				
CNJ603	* 1-564-337-00	PIN, CONNECTOR 3P				
CNJ604	* 1-565-561-11	PIN, CONNECTOR 3P				
CNJ701	* 1-564-342-11	PIN, CONNECTOR 8P				
CNJ702	* 1-564-339-00	PIN, CONNECTOR 5P				
		〈 DIODE 〉				
D701	8-719-912-20	DIODE	1SS120			
D702	8-719-912-20	DIODE	1SS120			
D707	8-719-912-20	DIODE	1SS120			
D710	8-719-301-39	DIODE	SEL2210S-D (PRESET)			
D711	8-719-301-39	DIODE	SEL2210S-D (TUNING)			
D712	8-719-912-20	DIODE	1SS120			
D714	8-719-912-20	DIODE	1SS120			
D715	8-719-010-28	DIODE	UZ-4.3BSA			
D716	8-719-912-20	DIODE	1SS120			
D717	8-719-912-20	DIODE	1SS120			
D718	8-719-912-20	DIODE	1SS120			

Ref. No.	Part No.	Description				Remarks
		〈 INDICATOR 〉				
FLT701 ⚠	1-519-651-11	INDICATOR TUBE, FLUORESCENT				
		〈 IC 〉				
IC701	8-759-246-31	IC	TMP87CK70F-6001			
IC702	8-759-500-31	IC	X24C01P (H3600)			
IC702	8-759-504-12	IC	X24C01S (H6600)			
IC703	8-749-920-83	IC	GP1U52XB (H3600)			
IC703	8-741-100-63	IC	SBX1619-51 (H6600)			
		〈 COIL 〉				
L701	1-410-521-11	INDUCTOR	100uH			
L702	1-410-521-11	INDUCTOR	100uH			
		〈 TRANSISTOR 〉				
Q701	8-729-900-80	TRANSISTOR	DTC114ES			
Q702	8-729-900-80	TRANSISTOR	DTC114ES			
Q703	8-729-620-05	TRANSISTOR	2SC2603-EF			
Q705	8-729-119-76	TRANSISTOR	2SA1175-HFE			
Q706	8-729-900-80	TRANSISTOR	DTC114ES			
Q707	8-729-620-05	TRANSISTOR	2SC2603-EF			
		〈 RESISTOR 〉				
R601	1-249-393-11	CARBON	10	5%	1/4W	
R701	1-249-417-11	CARBON	1K	5%	1/4W	
R702	1-249-417-11	CARBON	1K	5%	1/4W	
R703	1-249-417-11	CARBON	1K	5%	1/4W	
R704	1-249-417-11	CARBON	1K	5%	1/4W	
R705	1-249-417-11	CARBON	1K	5%	1/4W	
R706	1-249-423-11	CARBON	3.3K	5%	1/4W	
R707	1-249-423-11	CARBON	3.3K	5%	1/4W	
R708	1-249-421-11	CARBON	2.2K	5%	1/4W	
R709	1-249-423-11	CARBON	3.3K	5%	1/4W	
R710	1-249-429-11	CARBON	10K	5%	1/4W	
R711	1-249-429-11	CARBON	10K	5%	1/4W	
R712	1-249-411-11	CARBON	330	5%	1/4W	
R713	1-247-887-00	CARBON	220K	5%	1/4W	
R714	1-249-429-11	CARBON	10K	5%	1/4W	
R715	1-249-417-11	CARBON	1K	5%	1/4W	
R716	1-249-429-11	CARBON	10K	5%	1/4W	
R717	1-249-425-11	CARBON	4.7K	5%	1/4W	
R718	1-249-429-11	CARBON	10K	5%	1/4W	
R719	1-249-429-11	CARBON	10K	5%	1/4W	
R720	1-249-429-11	CARBON	10K	5%	1/4W	
R721	1-249-429-11	CARBON	10K	5%	1/4W	
R722	1-249-429-11	CARBON	10K	5%	1/4W	
R723	1-249-423-11	CARBON	3.3K	5%	1/4W	
R724	1-249-429-11	CARBON	10K	5%	1/4W	

The components identified by mark ⚠ or dotted line with mark ⚠ are critical for safety.
Replace only with part number specified.

When indicating parts by reference number, please include the board name.

CONNECTOR DISPLAY

Ref. No.	Part No.	Description				Remarks
R725	1-249-417-11	CARBON	1K	5%	1/4W	
R726	1-249-417-11	CARBON	1K	5%	1/4W	
R727	1-249-417-11	CARBON	1K	5%	1/4W	
R728	1-249-417-11	CARBON	1K	5%	1/4W	
R729	1-249-417-11	CARBON	1K	5%	1/4W	
R730	1-249-417-11	CARBON	1K	5%	1/4W	
R731	1-249-429-11	CARBON	10K	5%	1/4W	
R732	1-249-429-11	CARBON	10K	5%	1/4W	
R733	1-249-429-11	CARBON	10K	5%	1/4W	
R734	1-249-417-11	CARBON	1K	5%	1/4W	
R736	1-249-429-11	CARBON	10K	5%	1/4W	
R737	1-249-409-11	CARBON	220	5%	1/4W	
R738	1-247-895-00	CARBON	470K	5%	1/4W	
		〈 SWITCH 〉				
S701	1-554-303-21	SWITCH, TACTILE (CLOCK)				
S702	1-554-303-21	SWITCH, TACTILE (TIMER CONTROL)				
S703	1-554-303-21	SWITCH, TACTILE (TIMER SET)				
S705	1-554-303-21	SWITCH, TACTILE (MEMORY NEXT)				
S706	1-554-303-21	SWITCH, TACTILE (MODE)				
S707	1-554-303-21	SWITCH, TACTILE (STEREO/MONO)				
S708	1-554-303-21	SWITCH, TACTILE (BAND)				
S709	1-554-303-21	SWITCH, TACTILE (TUNING -)				
S710	1-554-303-21	SWITCH, TACTILE (TUNING +)				
		〈 CRYSTAL VIBRATOR 〉				
XT701	1-527-997-22	VIBRATOR, CRYSTAL (32kHz)				

9-956-240-21

Sony Corporation
Audio Group

English
91C1957-1
Printed in Japan

Published by Customer Relations and Service Group

ST-H3600/H6600

SONY
SERVICE MANUAL

4/18
AEP Model
UK Model

CORRECTION-1

Correct your service manual as shown below.

☛ : indicates corrected portion.

Page	INCORRECT			CORRECT	
25	No.	Part No.	Description	Part No.	Description
	3	X-4941-544-1	PANEL ASSY, ASSY (H3600)	X-4941-544-1	PANEL ASSY, ASSY (H3600)
		X-4942-523-1	PANEL ASSY, ASSY (H6600)	X-4941-523-1	PANEL ASSY, ASSY (H6600)

9-956-240-81

Sony Corporation
Audio Group

English
93E0958-1
Printed in Japan

Published by Audio Sector Quality Assurance Dept.