3772

CDP-H6600

SERVICE MANUAL

AEP Model
UK Model
E Model

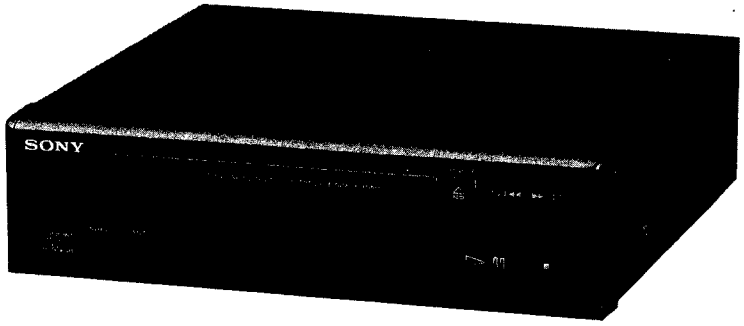

This set is the CD player section in MHC-5600/6600 and FH-E939CD.

Model Name Using Similar Mechanism	CDP-H300
CD Mechanism Type	CDM13B-5BD5
Base Unit Name	BU-5BD5

TABLE OF CONTENTS

SPECIFICATIONS

System	Compact disc digital audio system
Laser	Semiconductor laser (λ = 780 nm) Emission duration: continuous
Laser output	Max. 44.6 μW* * This output is the value measured at a distance of about 200 mm from the objective lens surface on the Optical Pick-up Block.
Signal to noise ratio	More than 90 dB
Dynamic range	More than 90 dB
Harmonic distortion	Less than 0.05% (at 1 kHz)
Channel separation	More than 90 dB
Output level	2 V (at 50 kilohms)
Load impedance	More than 10 kilohms
Outputs	DIGITAL OUT OPTICAL (optical output connector): wave length 660 nm, output level –18 dBm

CLASS 1 LASER PRODUCT
LUOKAN 1 LASERLAITE
KLASS 1 LASERAPPARAT

This appliance is classified as a CLASS 1 LASER product. The CLASS 1 LASER PRODUCT label is located on the rear exterior.

COMPACT DISC PLAYER

SONY®

LASER DIODE AND FOCUS SEARCH OPERATION CHECK

1. Make POWER switch on with no disc inserted and disc table closed.
2. Confirm that the following operation is performed while observing the objective lens.

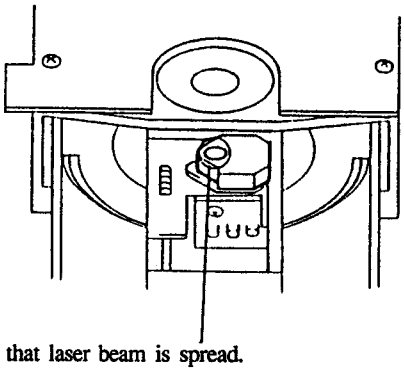

❶ Confirm that laser beam is spread.
❷ Up and down motion of the objective lens. (3 times)

HOW TO OPEN THE DISC TRAY WHEN POWER SWITCH TURNS OFF

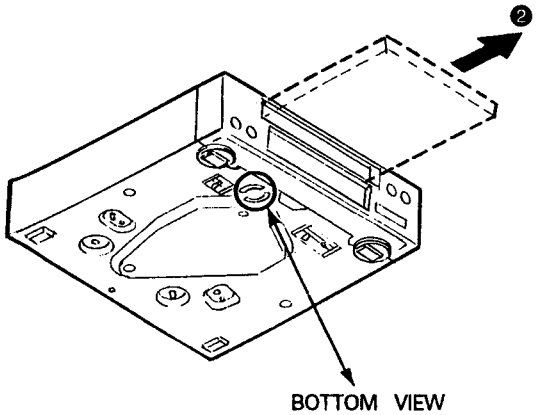

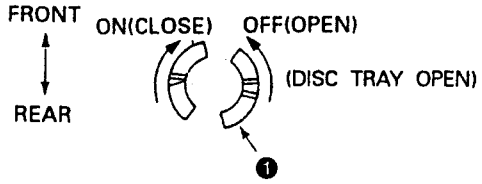

(1) Insert to ❶ for tapering driver, etc., and turn in the direction of arrow OFF. (Disc tray open)
(2) Tray as come out little of front panel, pull out in the direction of arrow ❷ by hand.

NOTES ON HANDLING THE OPTICAL PICK-UP BLOCK OR BASE UNIT

- The laser diode in the optical pick-up block may suffer electrostatic break-down because of the potential difference generated by the charged electrostatic load, etc. on clothing and the human body. During repair, pay attention to electrostatic break-down and also use the procedure in the printed matter which is included in the repair parts.
- The flexible board is easily damaged and should be handled with care.

NOTES ON LASER DIODE EMISSION CHECK

The laser beam on this model is concentrated so as to be focused on the disc reflective sureface by the objective lens in the optical pick-up block. Therefore, when checking the laser diode emission, observe from more than 30 cm away from the objective lens.

SAFETY-RELATED COMPONENT WARNING!!

COMPONENTS IDENTIFIED BY MARK ⚠ OR DOTTED LINE WITH MARK ⚠ ON THE SCHEMATIC DIAGRAMS AND IN THE PARTS LIST ARE CRITICAL TO SAFE OPERATION. REPLACE THESE COMPONENTS WITH SONY PARTS WHOSE PART NUMBERS APPEAR AS SHOWN IN THIS MANUAL OR IN SUPPLEMENTS PUBLISHED BY SONY.

SECTION 1
GENERAL

LOCATION OF CONTROLS

This section is extracted from instruction manual.

CD Player Section

1. Disc tray
2. CHECK button
3. EDIT/TIME FADE button
4. CD operation buttons
   ⏏ : OPEN/CLOSE
   ▷II : Play/pause
   ⏮ ◀◀ ▶▶ ⏭ : Manual search (when kept depressed)/Automatic Music Sensor (when pressed)
5. Display window

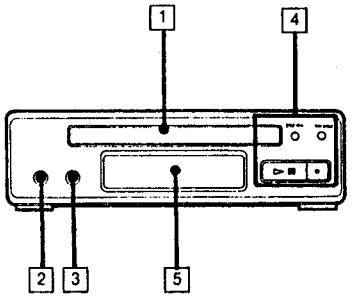

SECTION 2
ELECTRICAL BLOCK CHECKING

Note :
1. CD Block basically constructed to operate without adjustment. Therefore, check each item in order given.
2. Use YEDS-18 disc (3-702-101-01) unless otherwise indicated.
3. Use the oscilloscope with more than 10MΩ impedance.
4. Clean an object lens by an applicator with neutral detergent when the signal level is low than specified value with the following checks.

S Curve Check

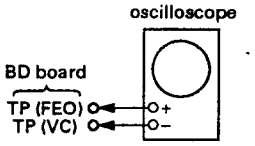

Procedure :
1. Connect oscilloscope to test point TP (FEO) on BD board.
2. Connect between test point TP (FES) and TP (VC) by lead wire.
3. Turned Power switch on and actuate the focus serch. (actuate the focus serch when disc table is moving in and out.)
4. Check the oscilloscope waveform (S curve) is symmetrical between A and B. And confirm peak to peak level within 3±1Vp-p.

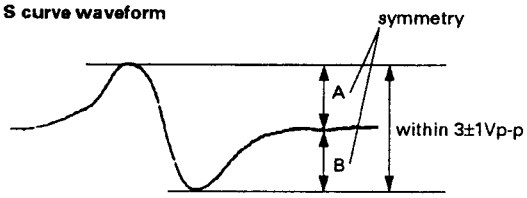

5. After check, remove the lead wire connected in step 2.

Note :
- Try to measure several times to make sure that the ratio of A : B or B : A is more than 10 : 7.
- Take sweep time as long as possible and light up the brightness to obtain best waveform.

RF Level Check

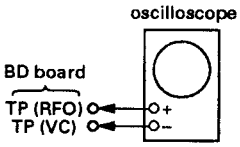

Procedure :
1. Connect oscilloscope to test point TP (RFO) on BD board.
2. Turn Power switch on.
3. Put disc (YEDS-18) in and playback.
4. Confirm that oscilloscope waveform is clear and check RF signal level is correct or not.

Note :
Clear RF signal waveform means that the shape " ◊ " can be clearly distinguished at the center of the waveform.

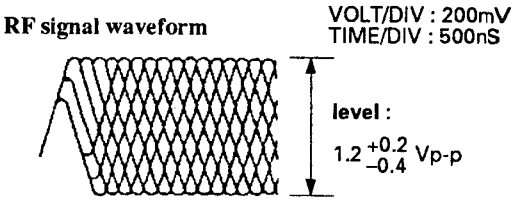

E-F Balance Check

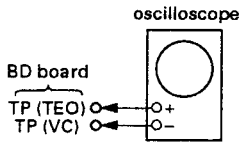

Procedure :
1. Connect test point TP (ADJ) to ground and TP (TES) to TP (VC) with lead wire.
2. Connect oscilloscope to test point TP (TEO) on BD board.
3. Turn Power switch on.
4. Put disc (YEDS-18) in and playback.
5. Confirm that the oscilloscope waveform is symmetrical on the top and bottom in relation to 0V, and check this level.

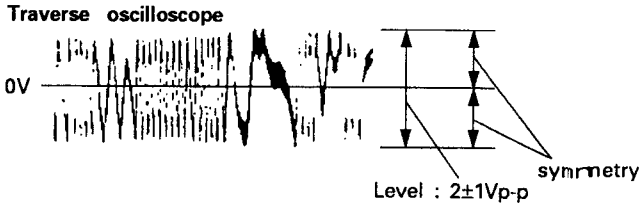

6. Remove the lead wire connected in step 1.

RF PLL FREE-RUN FREQUENCY CHECK

Procedure :

1. Connect frequency counter to test point (PCK) with lead wire.

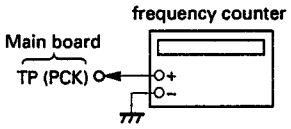

2. Turn Power switch on.
3. Confirm that reading on frequency counter is 4.3218MHz.

Focus/Tracking Gain

This gain has a margin, so even if it is slightly off.
There is no problem.
Therefore, do not perform, this adjustment.
Please note that it should be fixed to mechanical center position when you moved and do not know original position.

Checking for Location

[BD BOARD] – Conductor Side –

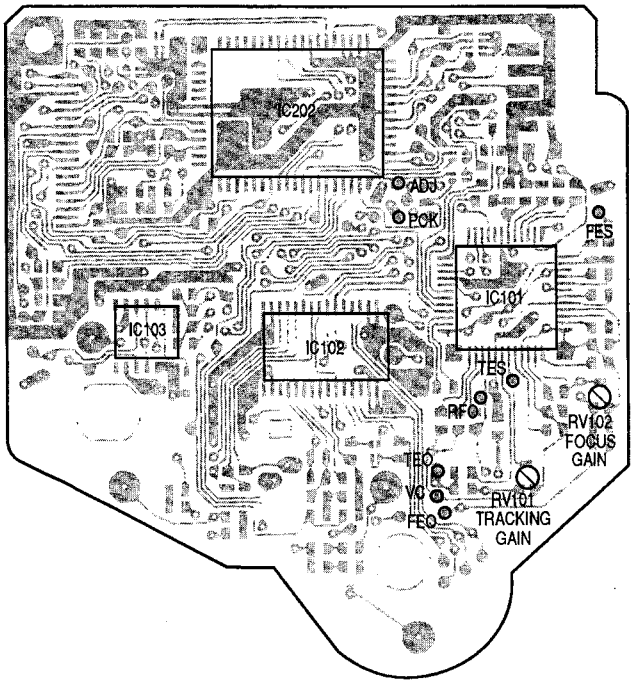

[TEST MODES]

1. Test mode of display micon (IC401)

Ground Pin ㉝ of IC401 to GND and turn ON the POWER switch, thus you can test the following 3 tests.

(1) All FL tube lamps
This mode is actuated immediately after turning ON the POWER switch.

(2) FL tube segment check
This mode is actuated by pressing the ⏏ key in the state of (1). Every time the ⏏ key is pressed, the segments are indicated sequentially from the segment a. When the last 1 segment is displayed, keying in is no longer accepted while continuing the lighting-up state of the last segment. Conditions are normal provided all lamps light up in the following order.

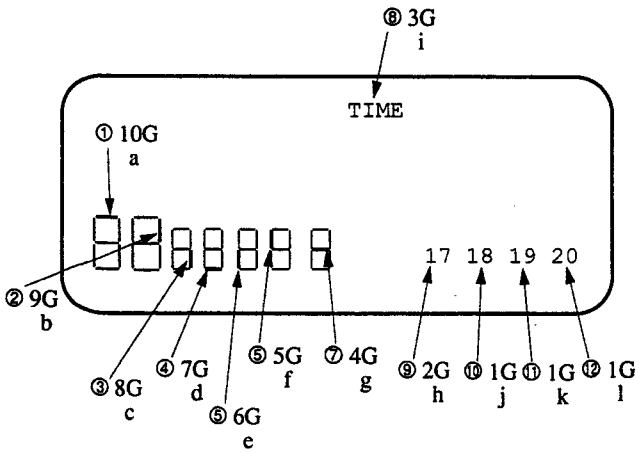

(3) KEY check
This mode is effected by pressing the ⏏ key in the state of (1), while indicating "1." Every time a new key is pressed subsequently, the indicated number is incremented. Conditions are normal provided "7" is indicated when all types of keys are pressed. Even if a key is pressed again, it is not counted.

* To leave the mode (2) or (3), press the ⏏ and ▷II keys in duplication, thereby the mode returning to all ON mode.

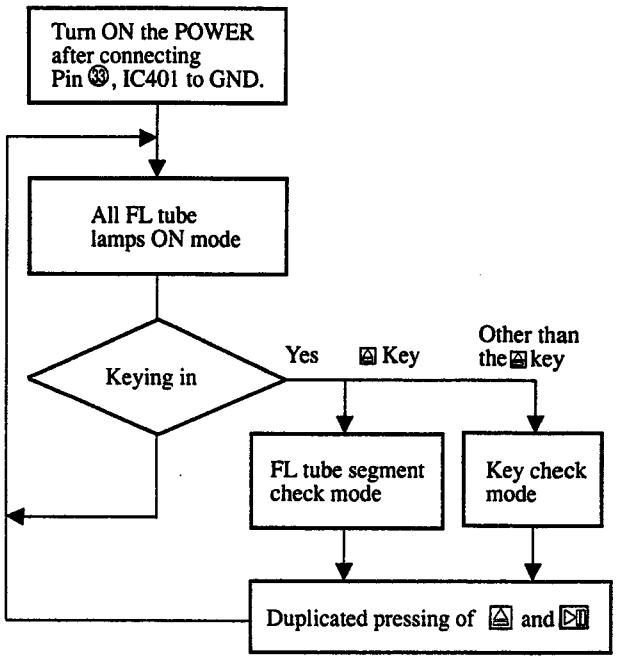

2. Test Modes of CD Syscon (IC202)

(1) ADJUST mode
When this mode is effected, the machine is operated normally except for the following.

- When pin ⑲, IC202 (ADJ) is set to "L" after turning ON the POWER switch:

1. GFS is no longer monitored during PLAY, PAUSE or SEARCH, while not stopping even with GFS remaining still at "L" (NG).
2. No high-speed feeding is activated during SEARCH.
3. Focus gain is reset to normal gain during PLAY (normally, the gain is lowered to reduce noise when FOCUS is locked).

- When Pin ⑬, IC202 (AFADJ) is set to "L" after turning ON the POWER switch:

1. Regardless of Pin ⑲ (ADJ) of the CLV-S fixed function, the CLV mode during PLAY becomes CLV-S (rough servo) only while Pin ⑬ remains "L".

(2) AFADJUST mode
In this mode, it is possible to check the interface between the display micon (IC401) and CD syscon (IC202).

- Set Pin ⑬, IC202 (AFADJ) to "L" before turning ON the POWER switch.

1. Every time the ⏏ key is pressed after turning On the POWER switch, indication on the FL tube is switched correspondingly. Conditions are normal provided the indication repeats the 4 patterns including all lamp ON.

SECTION 3
DIAGRAMS

3-1. BLOCK DIAGRAM

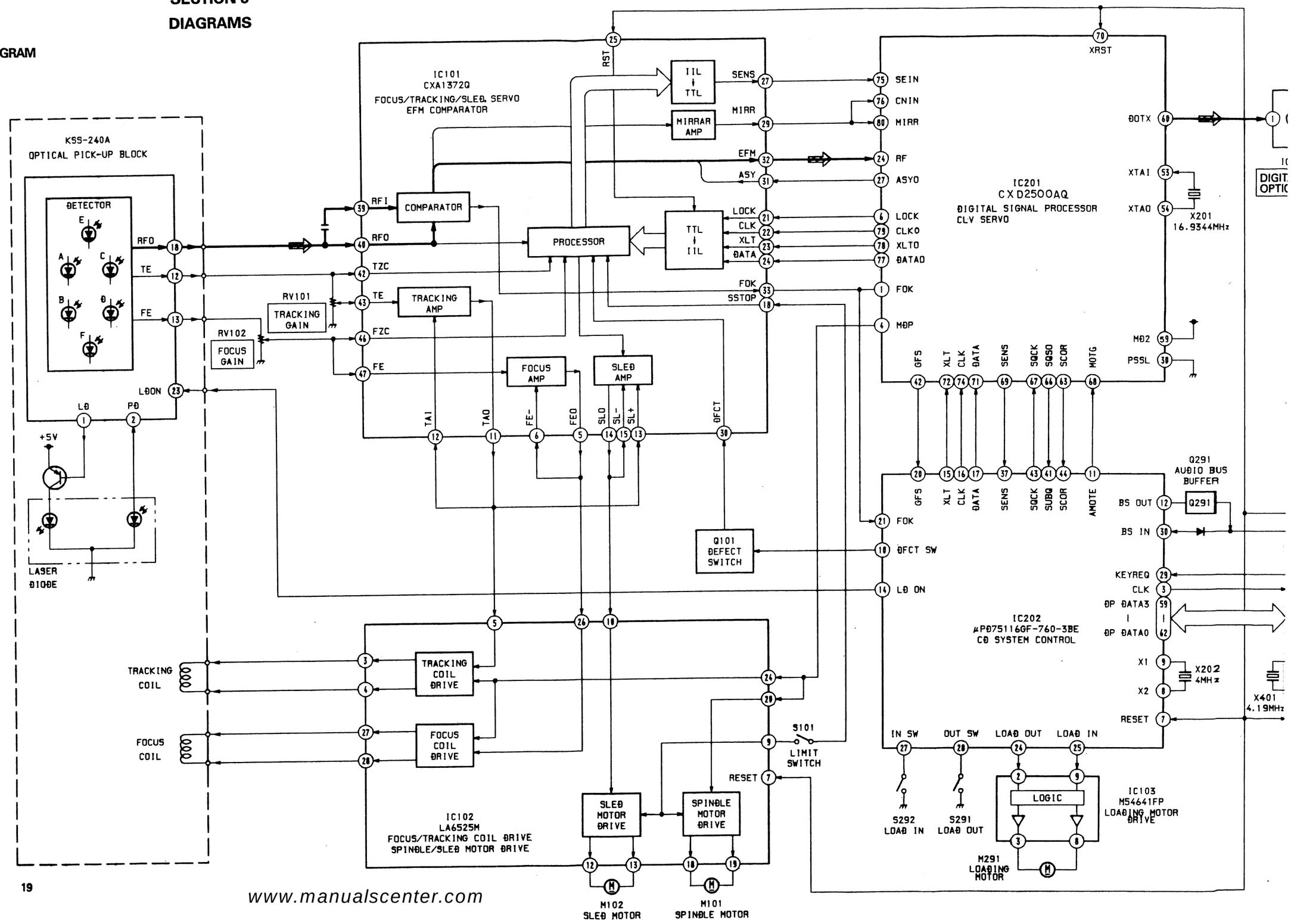

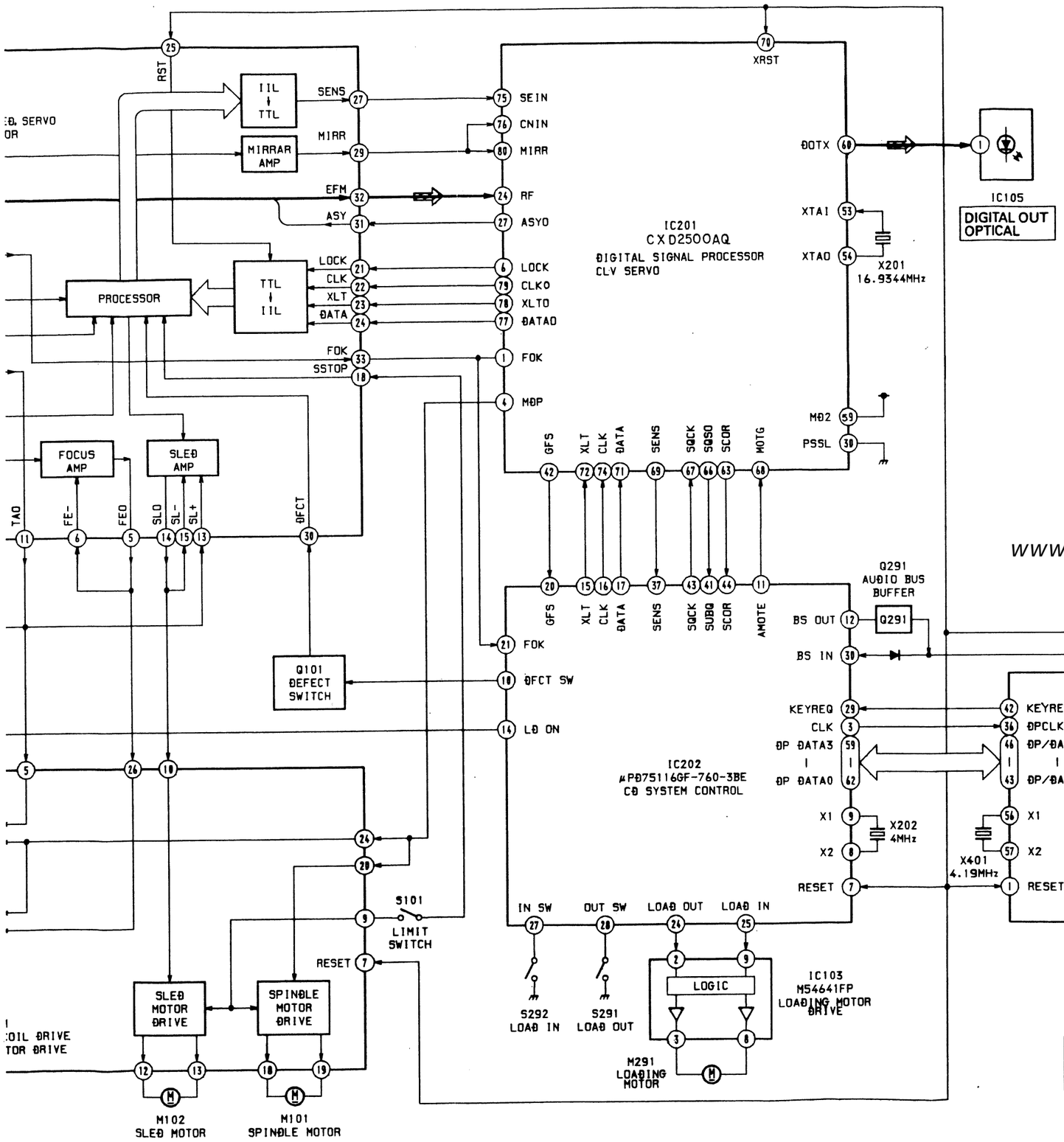

3-2. SEMICONDUCTOR LEAD LAYOUTS

2SA1162-G
2SC3052-EF
2SC3395
2SC3624A-L16
2SC4154-F

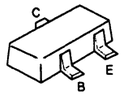

2SA1341
2SB1122-S

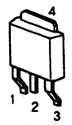

1 : BASE
2 : COLLECTOR
3 : EMITTER
4 : COLLECTOR

2SB1122-S
2SD1623

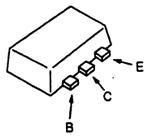

DTZ4.7B
1SS355

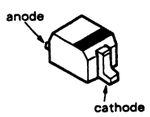

EC10DS2
EC10QS-04

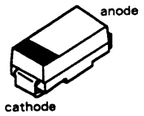

RD6.8M-B2
RD8.2M-B3

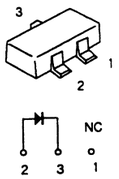

1SS266

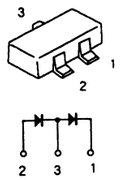

1S2836

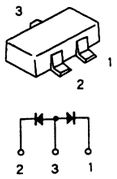

• SEMICONDUCTOR LOCATION

Ref. No.	Location
IC101	D-1
IC101	G-7
IC102	B-5
IC102	H-6
IC103	B-2
IC103	H-5
IC105	B-3
IC201	G-11
IC202	F-6
IC301	G-12
IC302	F-12
IC304	F-1
IC401	D-12
Q101	C-1
Q101	F-7
Q102	B-1
Q103	B-1
Q201	F-12
Q201	G-13
Q301	G-1
Q302	E-1
Q303	G-1
Q304	E-1
Q305	E-1
Q306	E-1
D101	B-3
D101	H-5
D102	B-3
D103	B-3
D104	B-6
D106	B-6
D113	B-3
D131	B-3
D201	F-12
D301	E-1
D302	E-1
D305	E-1
D306	E-1
D401	D-14
D402	D-15
D403	D-11

Note:
- ○——: indicated a lead wire mounted on the component side.
- ■ : Part mounted on the conductor side.
- ● : Through hole.
- ▒: Pattern from the side which enables seeing.
- ▒: Pattern of the rear side.

3-3. PRINTED WIRING BOARDS

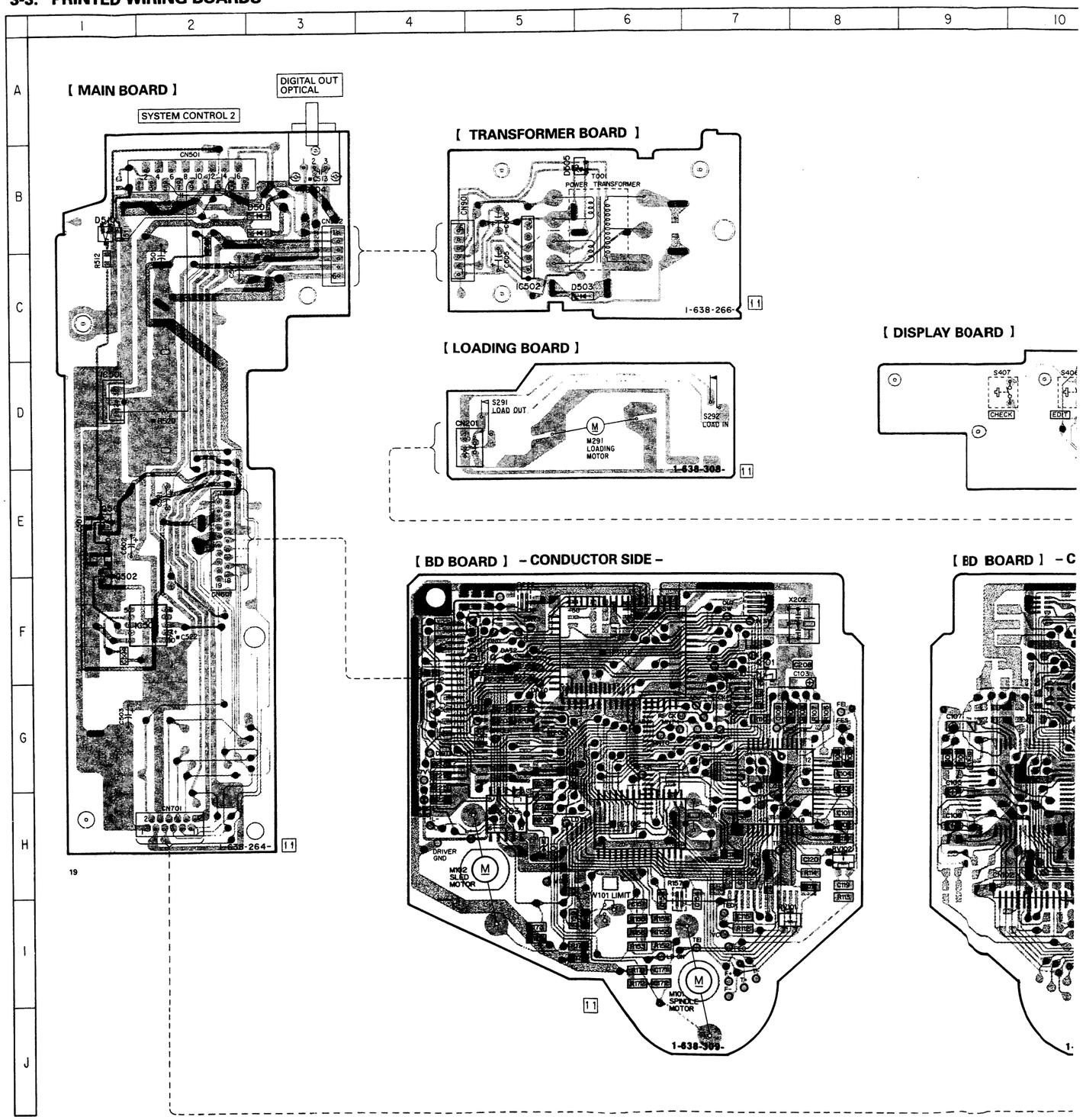

PRINTED WIRING BOARDS

1 2 3 4 5 6 7 8 9 10 11 12 13 14 15 16

[MAIN BOARD]

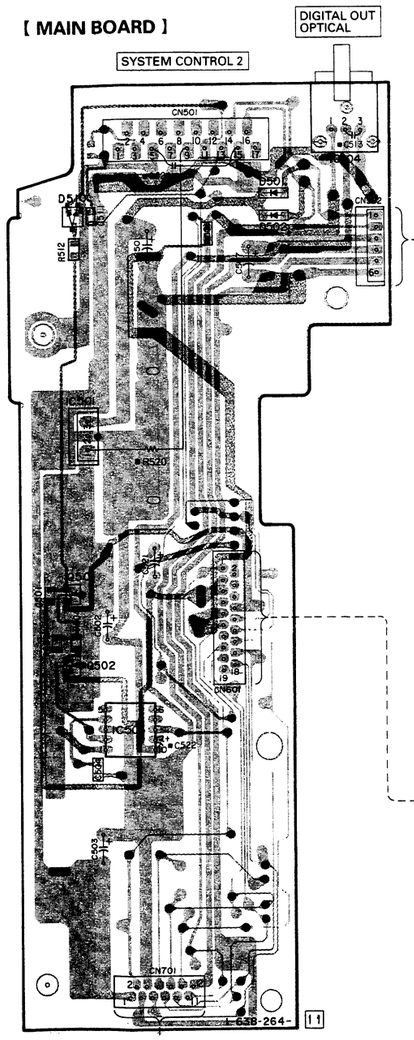

[TRANSFORMER BOARD]

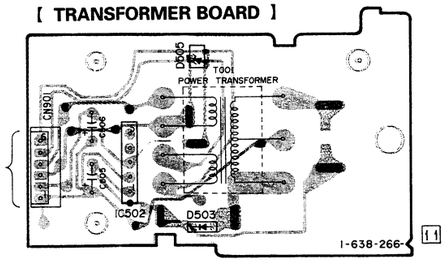

[LOADING BOARD]

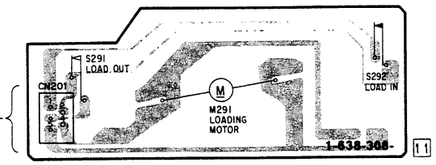

FL401 FLUORESCENT INDICATOR TUBE

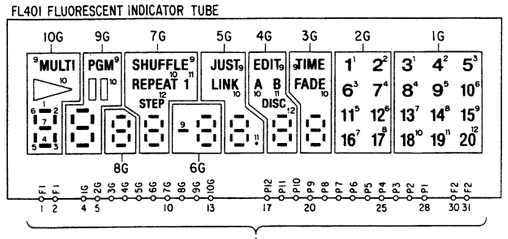

[DISPLAY BOARD]

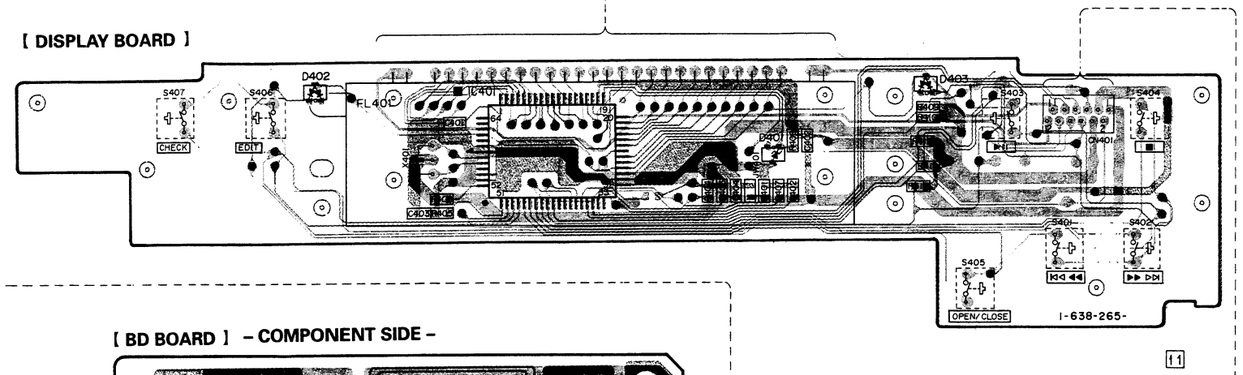

[BD BOARD] – CONDUCTOR SIDE –

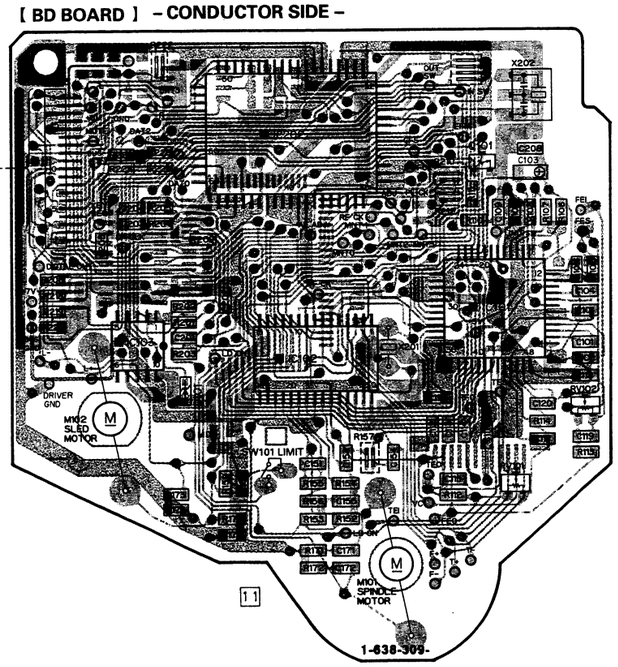

[BD BOARD] – COMPONENT SIDE –

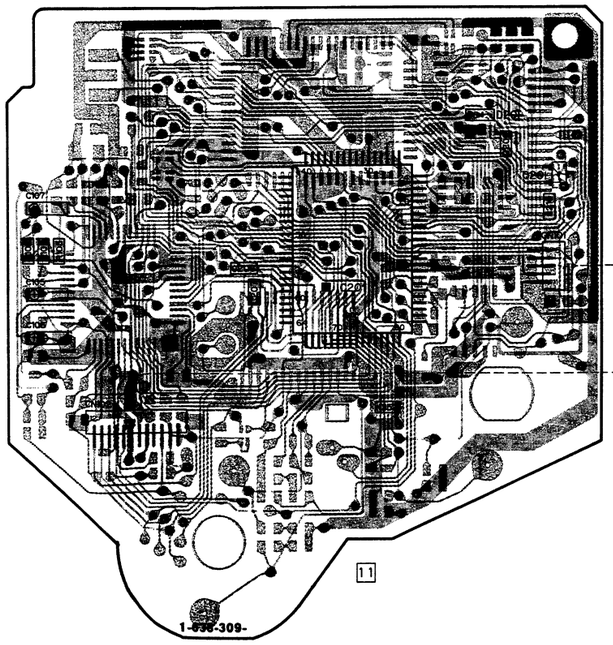

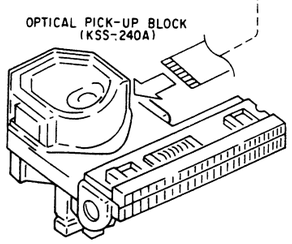

3-4. SCHEMATIC DIAGRAM – BD SECTION –

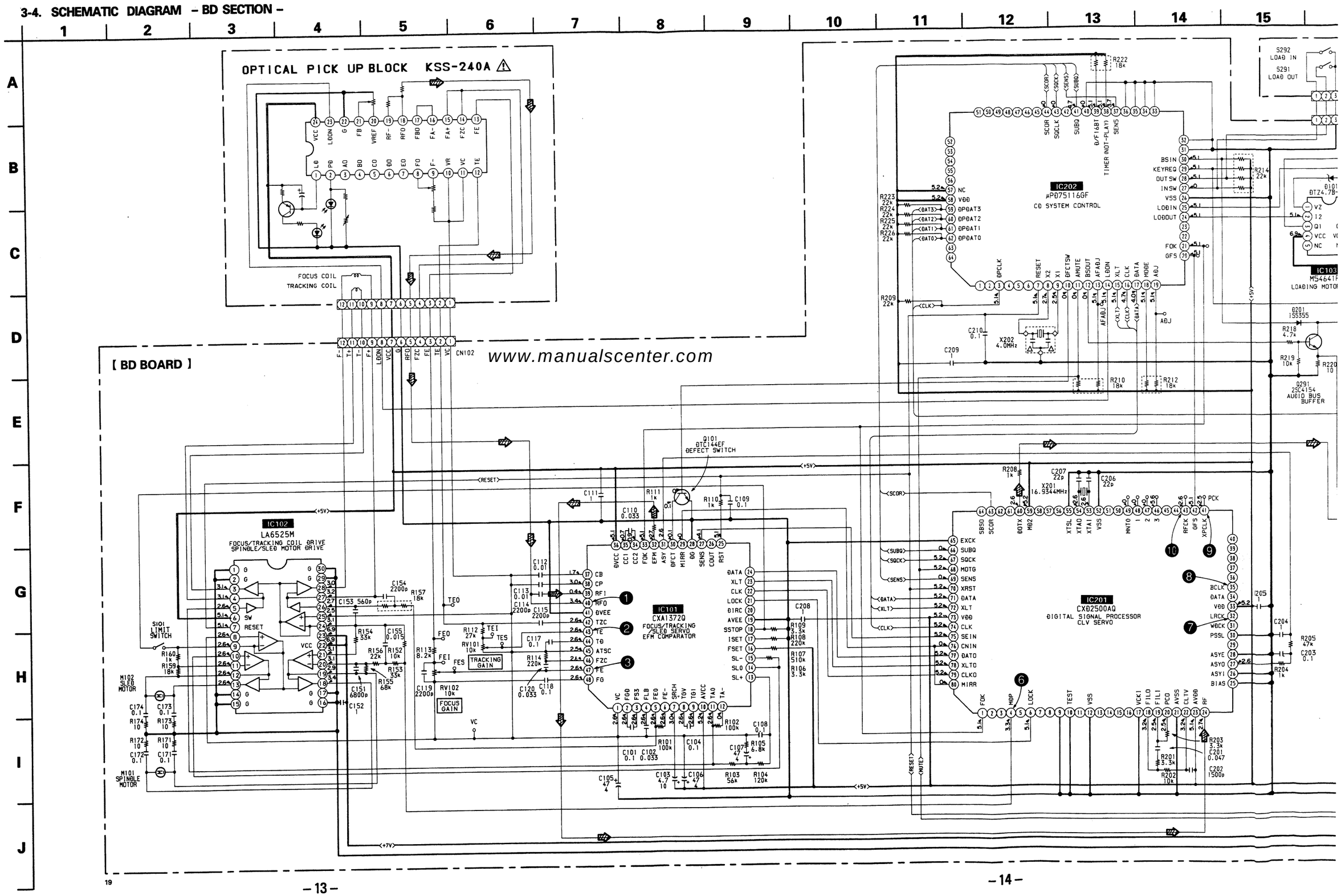

VIDE-13772/Druck 5

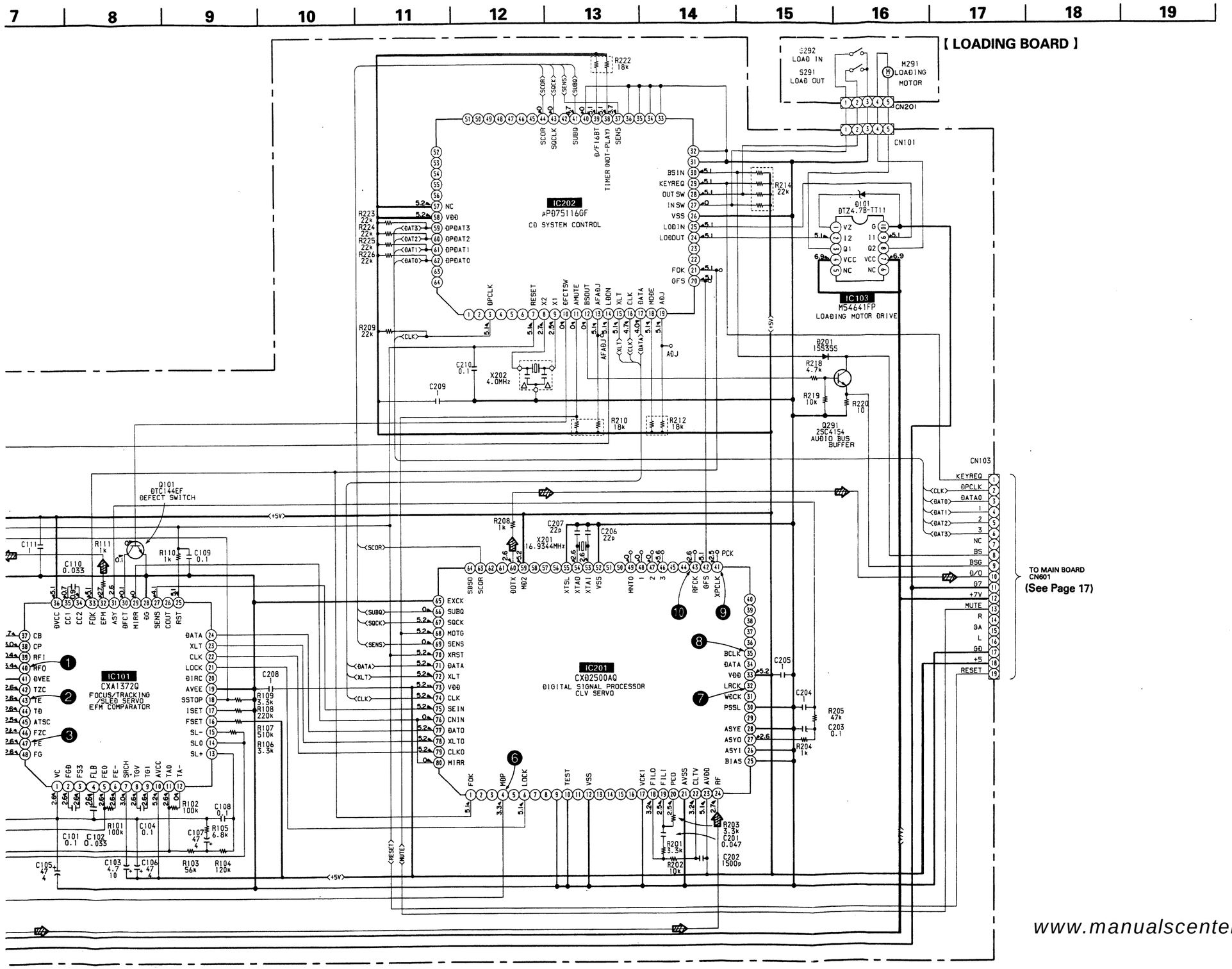

• **WAVEFORMS**

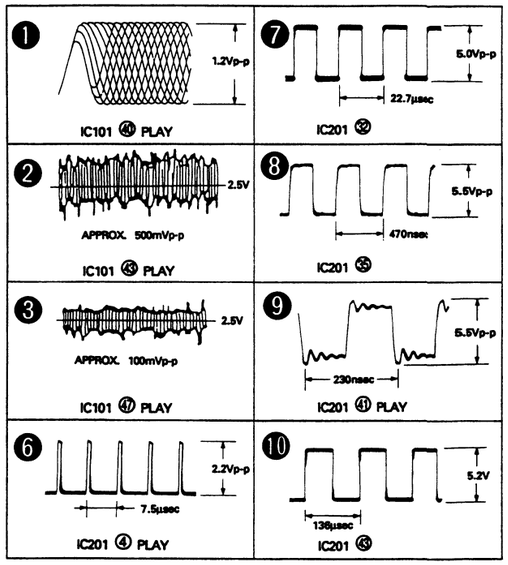

Note:

- All capacitors are in μF unless otherwise noted. pF: μμF 50WV or less are not indicated except for electrolytics and tantalums.
- All resistors are in ohms, 1/4W or less unless otherwise noted.
- △ : internal component.

The components identified by mark ⚠ or dotted line with mark ⚠ are critical for safety.
Replace only with part number specified.

- ▬▬: B + Line.
- ▪▪▪▪: B – Line.
- ▭: adjustment for repair.
- Voltages are DC between measurement points and ground.
- no mark : PLAY
- Voltages are taken with a VOM (input impedance 10MΩ). Voltage variations may be noted due to normal production tolerances.
- Waveforms are taken with a oscilloscope.
- Circled numbers refer to waveforms.
- Signal path
  ⇨: CD

3-5. SCHEMATIC DIAGRAM – MAIN SECTION –

• See page 15 for note.

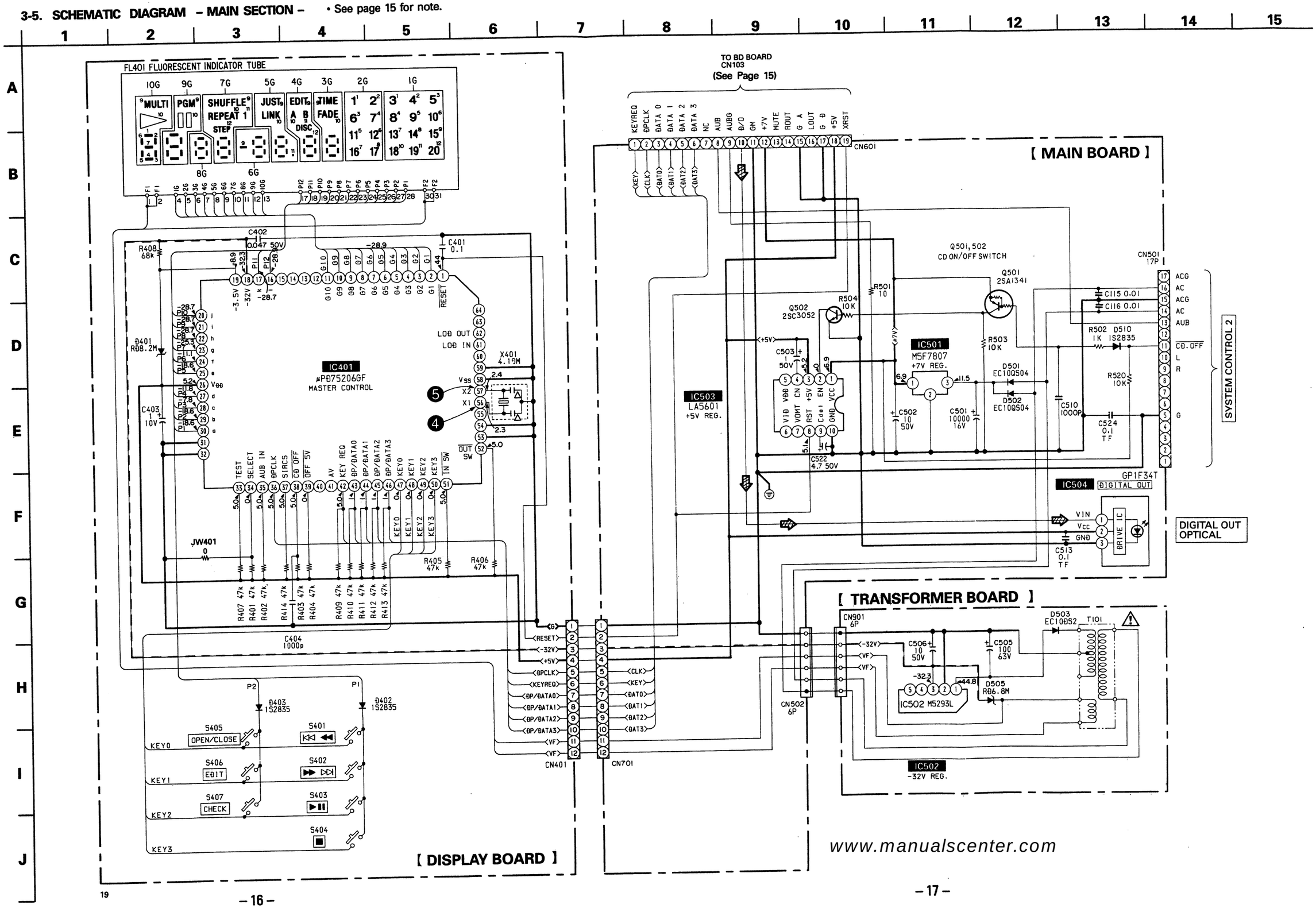

VIDE-13772/Druck 7

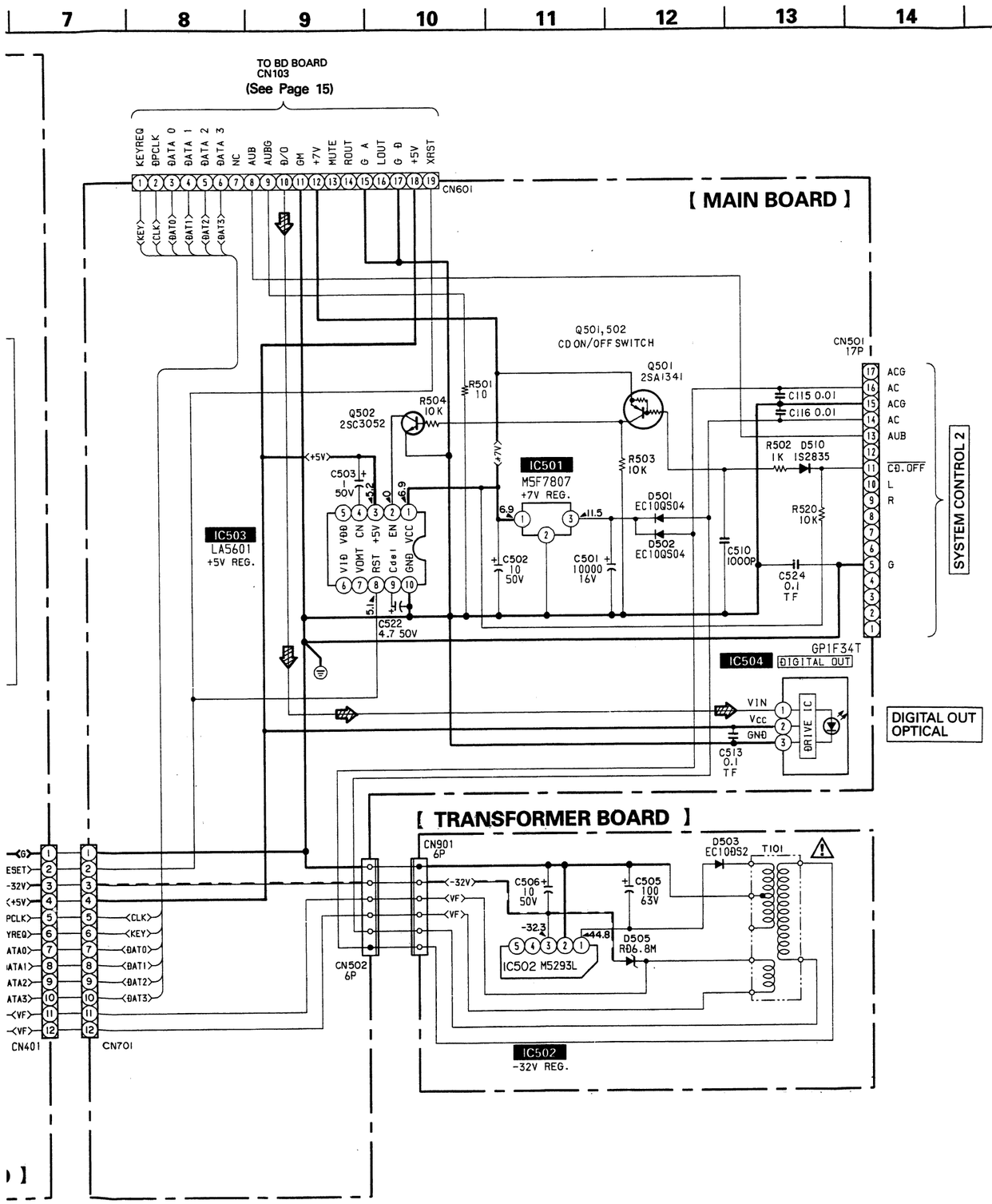
7
8
9
10
11
12
13
14
15
TO BD BOARD
CN103
(See Page 15)
KEYREQ
DPCLK
DATA 0
DATA 1
DATA 2
DATA 3
NC
AUB
AUBG
D/O
GM
+7V
MUTE
ROUT
G A
LOUT
G D
+5V
XRST
CN601
[MAIN BOARD]
Q501, 502
CD ON/OFF SWITCH
Q501
2SA1341
R501
10
R504
10K
Q502
2SC3052
C115 0.01
C116 0.01
CN501
17P
ACG
AC
ACG
AC
AUB
CD.OFF
L
R
G
SYSTEM CONTROL 2
R502 1K
D510 IS2835
R503
10K
IC501
M5F7807
+7V REG.
D501
EC10QS04
D502
EC10QS04
R520
10K
C510
1000P
C524
0.1
TF
C503
1
50V
IC503
LA5601
+5V REG.
VIB
VDD
VDMT
CN
RST
+5V
Cdel
EN
VCC
GND
C502
10
50V
C501
10000
16V
C522
4.7 50V
IC504
GP1F34T
DIGITAL OUT
VIN
Vcc
GND
DRIVE IC
C513
0.1
TF
DIGITAL OUT
OPTICAL
[TRANSFORMER BOARD]
CN901
6P
D503
EC10DS2
T101
C506
10
50V
C505
100
63V
-32.3
-44.8
D505
RD6.8M
IC502 M5293L
CN502
6P
IC502
-32V REG.
CN401
CN701

• **WAVEFORMS**

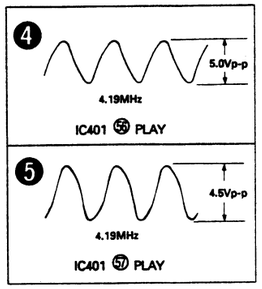
4
5.0Vp-p
4.19MHz
IC401 58 PLAY
5
4.5Vp-p
4.19MHz
IC401 57 PLAY

3-6. IC BLOCK DIAGRAMS

IC101 CXA1372Q

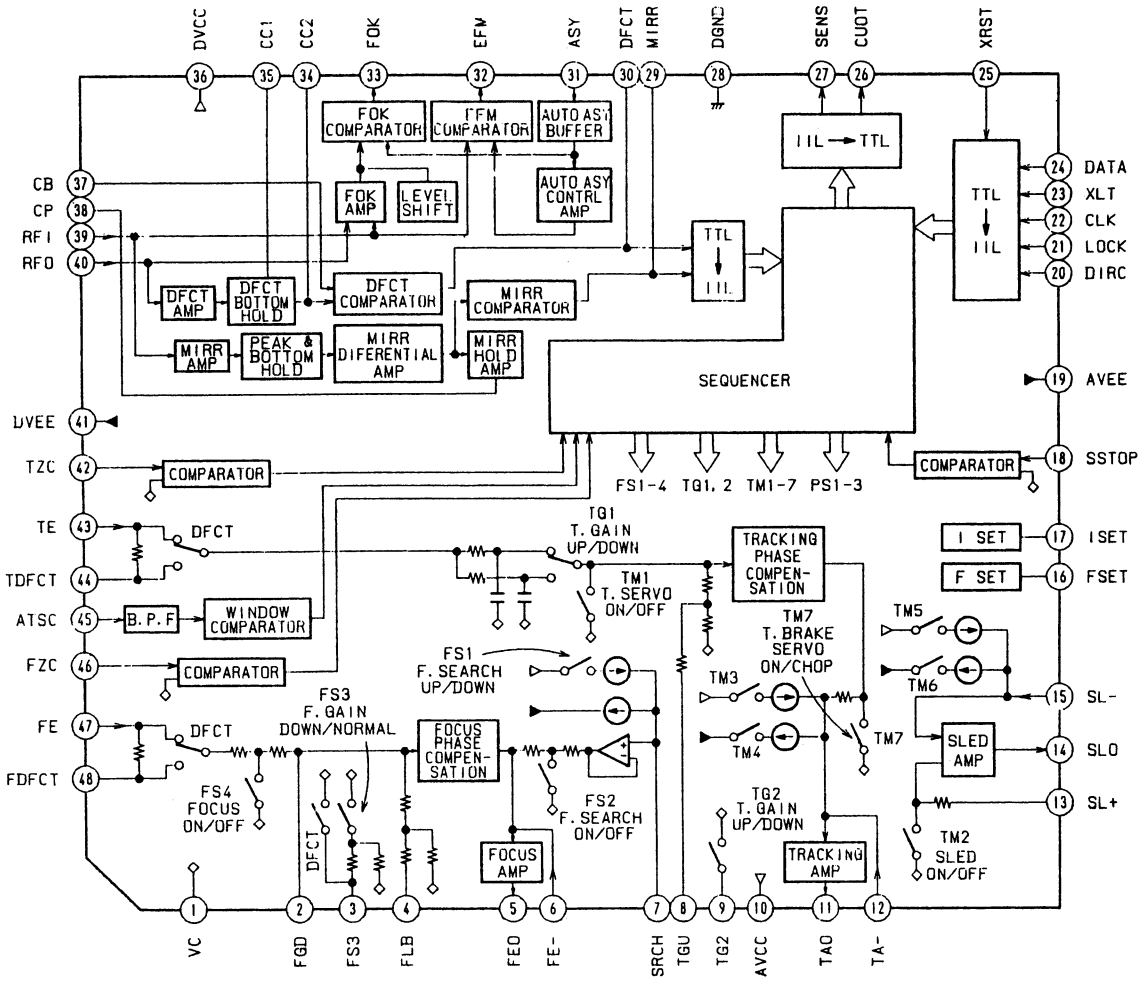

IC103 M54641FP

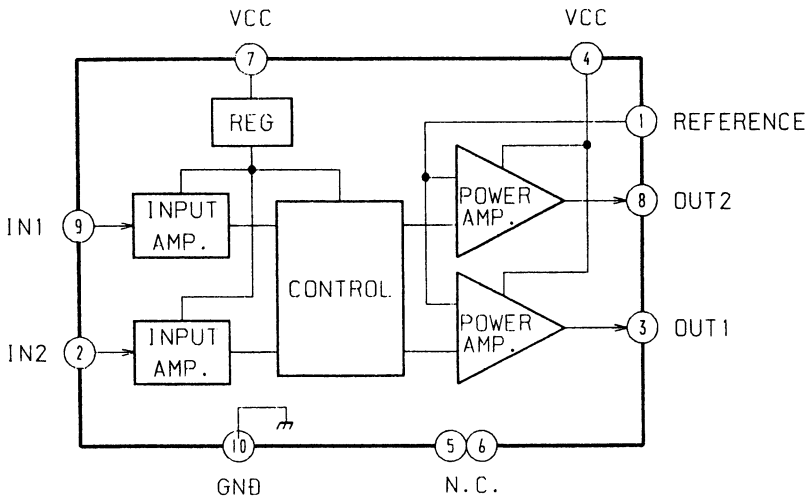

IC201 CXD2500AQ

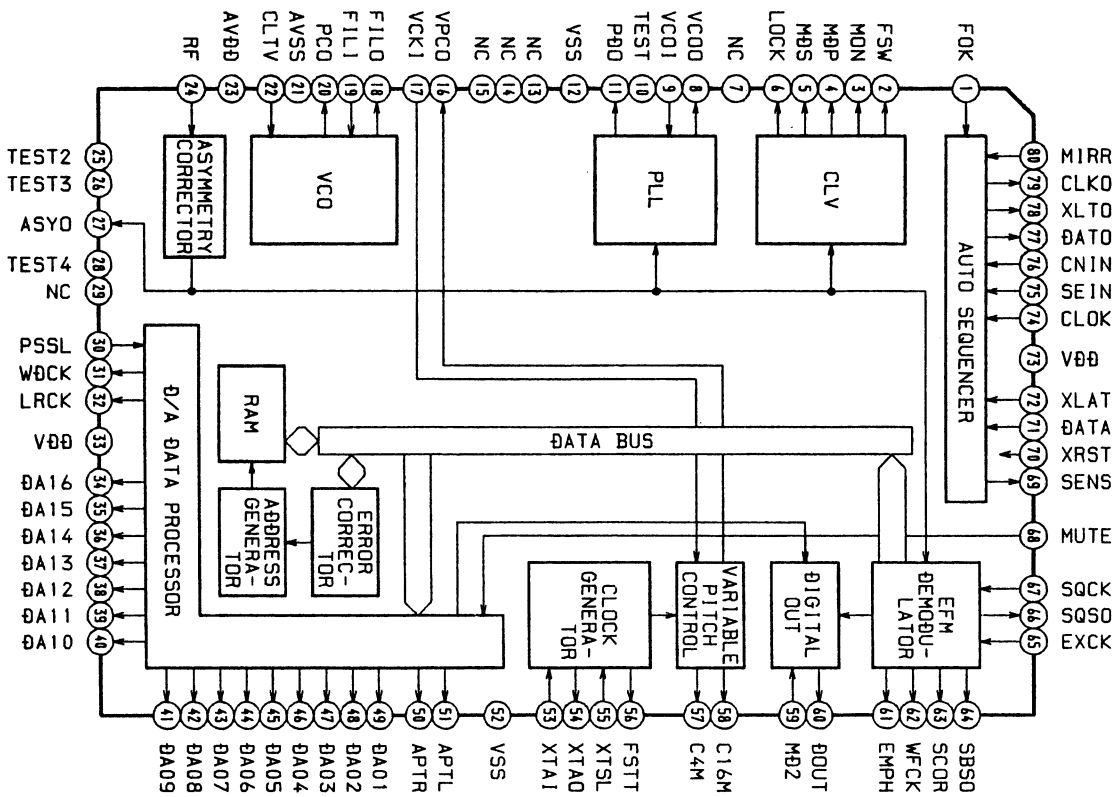

IC502 M5293L

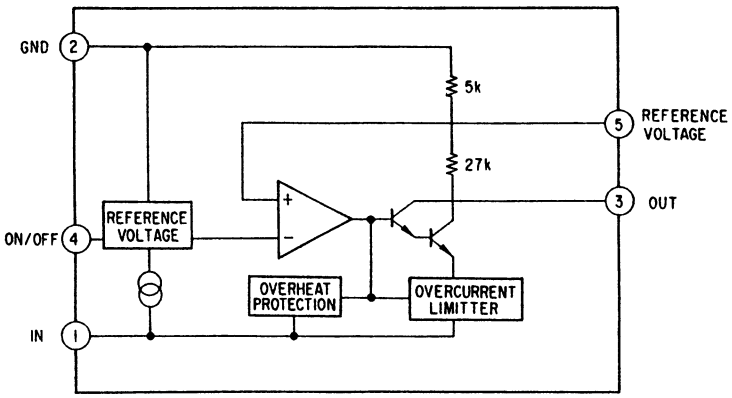

IC503 LA5601

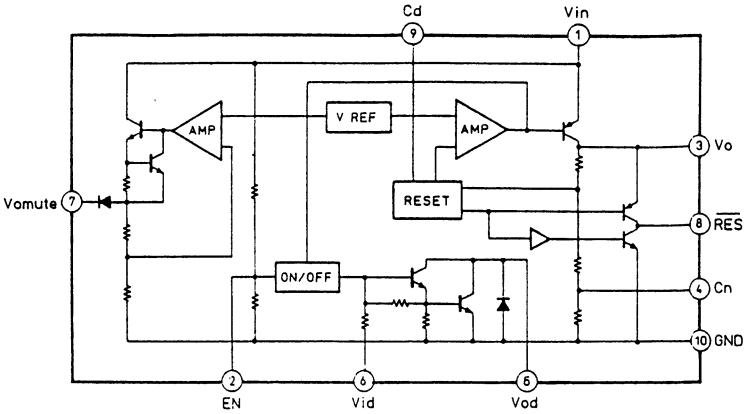

3-7. PIN FUNCTION OF IC202 AND IC401

- **IC202 CD System Controller (μPD75116GF-760-3BE)**

Functions effected by the captioned controller include IC101 (RF signal processing servo) and IC201 (DSP digital filter) loading control in the CD unit, data exchange with IC401 (master controller), audio bus entry, etc.

Pin No.	Pin Name	I/O	Description
1-2		O	Not in use with the model (open).
3	DPCLK	O	Display data transfer clock output to IC401 (display micon)
4-6		O	Not in use with the model (open)
7	$\overline{\text{RESET}}$	I	System reset input. "L": Reset
8	X2	I	Clock input
9	X1	I	Clock input (4 MHz)
10	DPCF SW	O	DEFECT circuit ON/OFF switching output of IC101 (CXA1372Q). It is turned OFF ("H") to focus-search the DISK flaw detection circuit.
11	AMUTE	O	Muting control output. "H": Mute
12	BSOUT	O	Audio bus output
13	AFADJ	I	Test mode input. Various test operations are effected upon "L" after turning ON the POWER.
14	LDON	O	Optical pickup laser diode ON/OFF switching output. "H": ON
15	XLT	O	Serial data latch output to IC201 (CXD2500AQ)
16	CLK	O	Serial data transfer clock output to IC201 (CXD2500AQ)
17	DATA	O	Serial data output to IC201 (CXD2500AQ)
18	MODE	I	Not in use with the model (GND)
19	ADJ	I	Test mode input. Upon "L," GFS checking is disabled while continuously rotating the spindle no matter whether frame synch is issued during PLAY, PAUSE or SEARCH.
20	GFS	I	GFS signal input from IC201 (CXD2500AQ). "L": NG "H": OK
21	FOK	I	Focus OK signal input from IC101 (CXA1372Q). "H": OK
22 - 23		O	Not in use with the model (open)
24	LODOUT	O	Output to rotate M291 (loading motor) in the loading out direction. *1
25	LODIN	O	Output to rotate M291 (loading motor) in the loading in direction. *1
26	Vss	–	Power terminal (GND)
27	$\overline{\text{IN SW}}$	I	S292 (Loading in switch) input
28	$\overline{\text{OUT SW}}$	I	S291 (Loading out switch) input
29	KEY REQ	I	Key data request input from IC401 (display micon)
30	BS IN	I	Audio bus input
31 - 36			Not in use with the model (GND)
37	$\overline{\text{SENS}}$	I	SENS input from IC101 (CXA1372Q) and IC201 (CXD2500AQ)
38	$\overline{\text{TIMER}}$	I	Not in use with the model (pull up)
39	D/F 16BIT	I	IC201 (CXD2500AQ) digital filter mode setting input. It is fixed at 16 bit, 4Fs with the model (pull up).
40		I	Not in use with the model (GND)
41	SUBQ	I	Subcode Q data input from IC201 (CXD2500AQ)
42		O	Not in use with the model (open)
43	SQCLK	O	Subcode Q data reading clock output to IC201 (CXD2500AQ)
44	SCOR	I	Subcode synch S0 + S1 detection input from IC201 (CXD2500AQ)
45 - 56		O	Not in use with the model (open)
57	N.C.	I	Not in use with the model (+5V)
58	VDD	–	Power terminal (+5V)
59 - 62	DPDATA3-0	I/O	Key data input and display data output with IC401 (display micon)
63 - 64		O	Not in use with the model (open)

*1 Loading motor control

	IN	OUT	BRAKE
LODOUT ㉔	L	H	H
LODIN ㉕	H	L	H

• **IC401 Display controller (μPD75206GF-716-3BE)**

In charge of displaying the FL tube and keying in, it exchanges data with the IC202 (CD syscon) in 4-bit parallel mode.

Pin No.	Pin Name	I/O	Description
1	$\overline{\text{RESET}}$	I	System reset input. "L": Reset
2 - 11	G1-10	O	Digital output to the FL tube
12 - 15		O	Not in use with the model (open)
16, 17	l, k	O	FL tube segment output
18	VLOAD	–	Power supply for the FL tube controller (builtin) (-32V)
19	VPRE	–	Power supply for the FL tube predriver (-3.5V)
20 - 25	j - e	O	FL tube segment output
26	VDD	–	Power terminal (+5V)
27, 28	d, c	O	FL tube segment output
29, 30	b, a	O	FL tube segment, key scan output
31, 32		I	Not in use with the model (GND)
33	$\overline{\text{TEST}}$	I	Test mode input. "L": Test mode
34	SELECT	I	Not in use with the model (pull up)
35	BSIN	I	Not in use with the model (pull up)
36	DPCLK	I	Display data transfer clock input from IC202 (CD syscon)
37, 38		I	Not in use with the model (pull up)
39		O	Not in use with the model (pull up)
40, 41		O	Not in use with the model (open)
42	KEY REQ	O	Key data request output to IC202 (CD syscon)
43 - 46	DPDATA0-3	I/O	Key data output and display data input with IC202 (CD syscon)
47 - 50	KEY0-3	I	Key data input
51, 52		I	Not in use with the model (pull up)
53, 54		I	Not in use with the model (GND)
55		O	Not in use with the model (open)
56	X1	I	System clock input (4.19 MHz)
57	X2	I	System clock input
58	Vss	–	Power supply terminal (GND)
59		I	Not in use with the model (GND)
60 - 64		O	Not in use with the model (open)

SECTION 4
EXPLODED VIEWS

NOTE:
- -XX, -X mean standardized parts, so they may have some differences from the original one.
- Color Indication of Appearance Parts
  Example:
  KNOB,BALANCE(WHITE)...(RED)
  ↑ ↑
  Parts color Cabinet's color
- Items marked "*" are not stocked since they are seldom required for routine service. Some delay should be anticipated when ordering these items.
- The mechanical parts with no reference number in the exploded views are not supplied.
- Hardware(# mark) list is given in the last of this parts list.

The components identified by mark ⚠ or dotted line with mark ⚠ are critical for safety.
Replace only with part number specified.

When indicating parts by reference number, please include the board name.

(1) CHASSIS SECTION

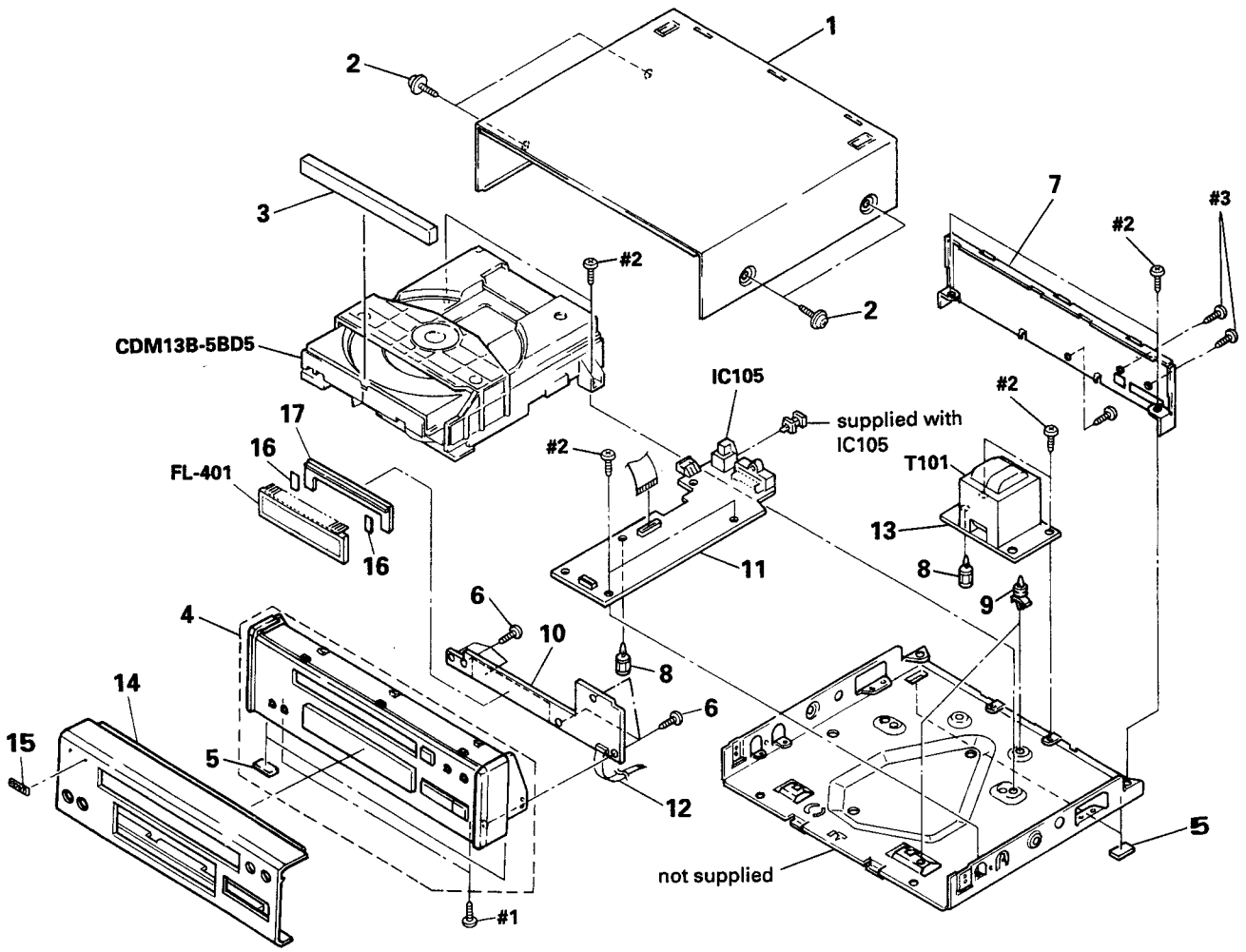

Ref. No.	Part No.	Description	Remarks
1	4-932-844-01	CASE	
2	3-363-099-01	SCREW (CASE +3X8 TP2)	
3	X-4941-527-1	LID (TRAY) ASSY	
4	X-4941-525-1	PANEL ASSY, FRONT	
5	4-930-336-01	FOOT (FELT)	
6	4-928-635-01	SCREW, +BV (2.6X8) TAPPING	
7	* 4-943-175-11	PAENL, BACK	
8	* 3-669-610-00	SPACER	
9	* 4-924-098-11	HOLDER, PC BOARD	
10	* A-4617-802-A	DISPLAY BOARD, COMPLETE	
11	* 1-638-264-11	MAIN BOARD	
12	1-575-001-11	WIRE, FLAT TYPE (12 CORE)	
13	* 1-638-266-11	TRANSFORMER BOARD	
14	4-944-445-01	PANEL, FRONT	
15	4-942-636-01	EMBLEM (NO.3.5), SONY	
16	* 4-932-810-11	CUSHION (FL)	
17	* 4-944-444-01	HOLDER (FL TUBE)	
T101	⚠ 1-450-341-11	TRANSFORMER, POWER	

(2) CD MECHANISM SECTION (CDM13B-5BD5)

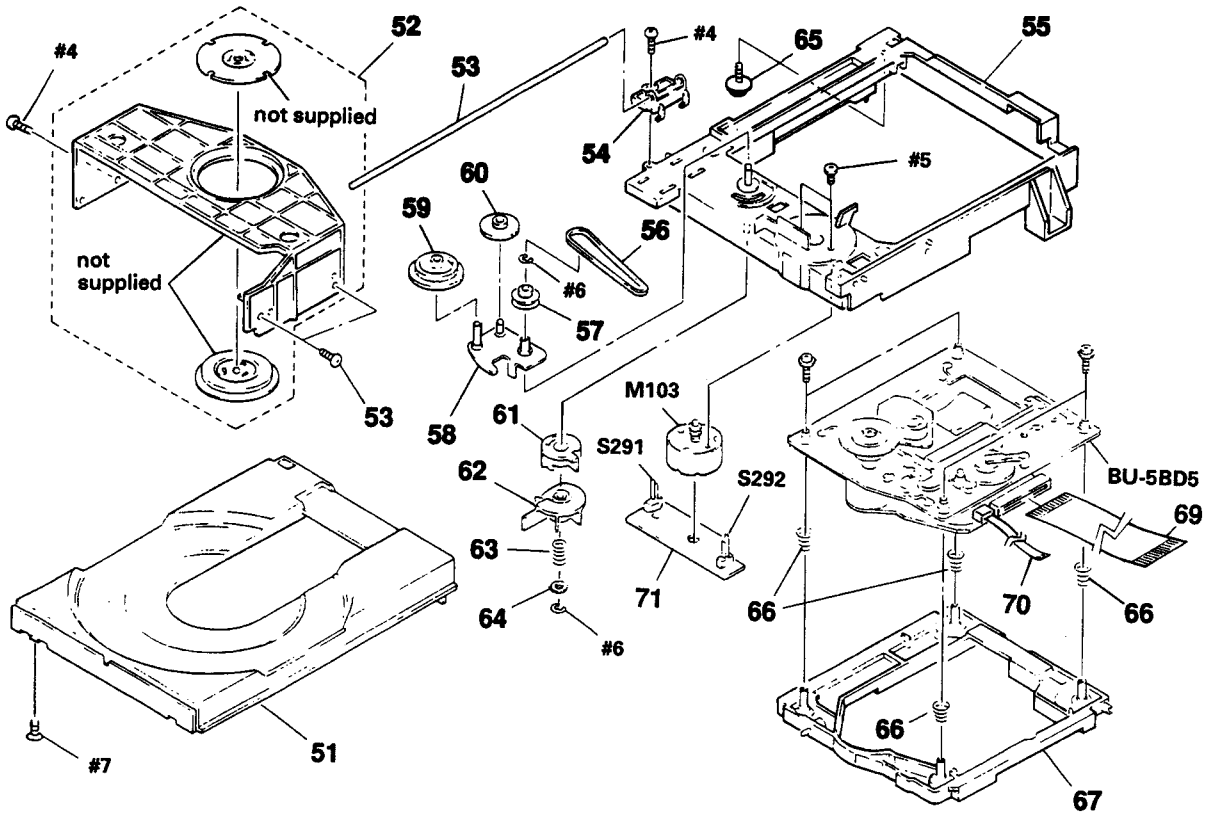

Ref. No.	Part No.	Description	Remarks
51	4-944-012-01	TABLE, DISC	
52	A-4604-752-A	HOLDER (MG) ASSY	
53	4-929-764-01	SHAFT (TABLE GUIDE)	
54	4-944-006-01	BEARING	
55	X-4941-462-1	CHASSIS (MD) ASSY	
56	4-927-649-01	BELT	
57	4-929-724-01	PULLEY (B)	
58	X-4929-703-1	ARM ASSY, SWING	
59	4-927-620-11	GEAR (P)	
60	4-927-628-01	GEAR (C)	
61	4-929-727-01	CAM (A)	
62	4-929-729-01	CAM (B)	
63	3-659-338-00	SPRING, COMPRESSION	
64	4-927-654-01	WASHER (LIMITER)	
65	* 4-917-583-21	BRACKET, YOKE	
66	4-917-541-01	SPRING (B)	
67	4-929-747-01	HOLDER (BU)	
68	4-933-134-01	SCREW (+PTPWH M2.6X6)	
69	1-590-909-21	WIRE, FLAT TYPE (19 CORE)	
70	1-590-530-11	WIRE, FLAT TYPE	
71	* 1-638-308-11	LOADING BOARD	
M103	A-4608-362-A	MOTOR (L) ASSY	

(3) OPTICAL PICK-UP BLOCK (BU-5BD5)

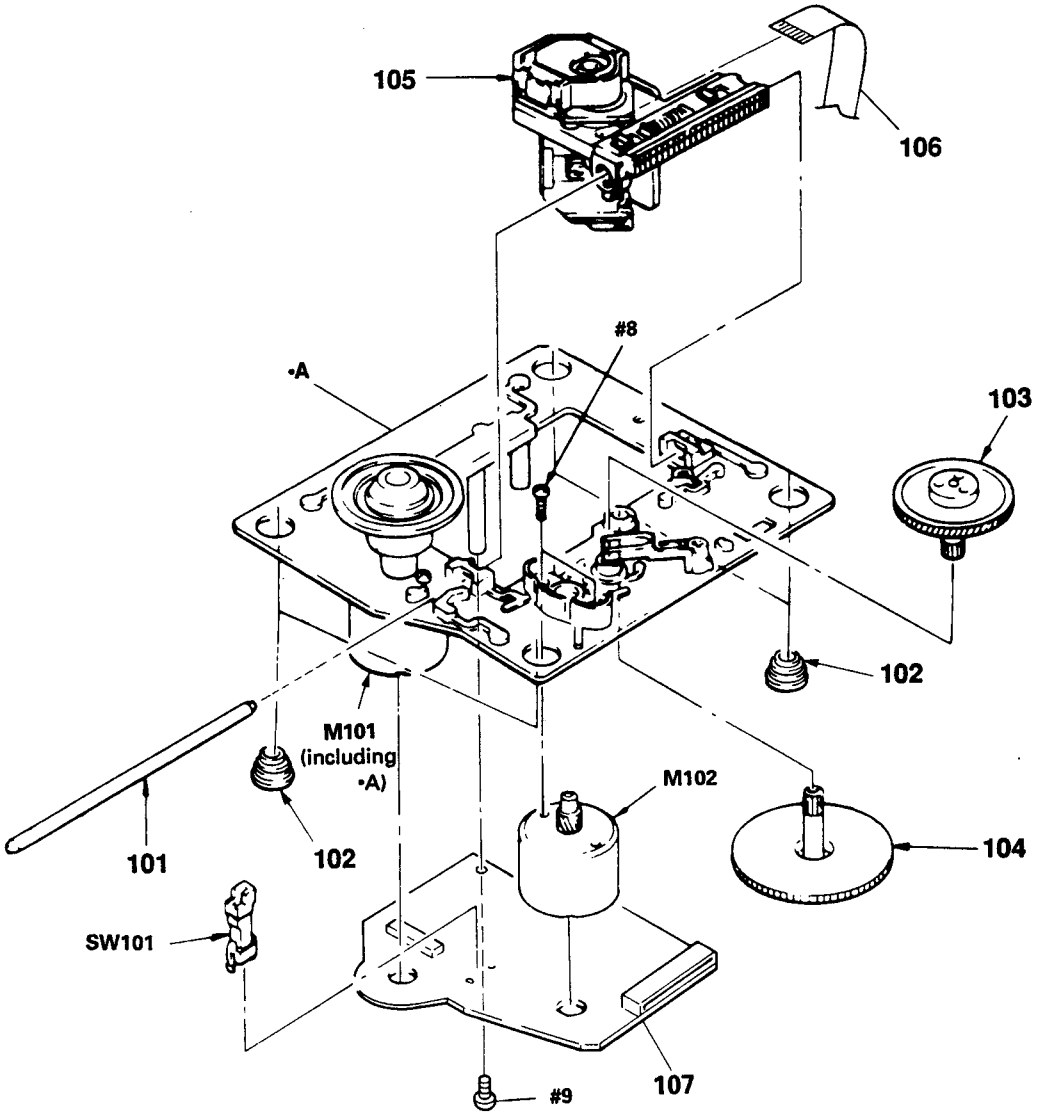

Ref. No.	Part No.	Description	Remarks
101	4-917-565-01	SHAFT, SLED	
102	4-933-126-01	INSULATOR (A)	
103	4-917-567-01	GEAR (M)	
104	4-917-564-01	GEAR (P), FLATNESS	
105	⚠ 8-848-144-11	DEVICE, OPTICAL KSS-240A	
106	1-575-001-11	WIRE, FLAT TYPE (12 CORE)	
107	* A-4617-762-A	BD BOARD, COMPLETE	
M101	X-4917-523-3	ASSY, MOTOR (SPINDLE)	
M102	X-4917-504-1	ASSY, MOTOR (SLED)	
SW101	1-572-085-11	SWITCH, LEAF (LIMIT)	

The components identified by mark ⚠ or dotted line with mark ⚠ are critical for safety.
Replace only with part number specified.

SECTION 5
ELECTRICAL PARTS LIST

BD

NOTE:

The components identified by mark ⚠ or dotted line with mark ⚠ are critical for safety.
Replace only with part number specified.

When indicating parts by reference number, please include the board name.

- Due to standardization, replacements in the parts list may be different from the parts specified in the diagrams or the components used on the set.
- -XX, -X mean standardized parts, so they may have some difference from the original one.
- RESISTORS
  All resistors are in ohms
  METAL : Metal-film resistor
  METAL OXIDE : Metal Oxide-film resistor
  F : nonflammable
- Items marked "*" are not stocked since they are seldom required for routine service. Some delay should be anticipated when ordering these items.
- SEMICONDUCTORS
  In each case, u : µ, for example :
  uA...: µA..., uPA...: µPA...,
  uPB...: µPB..., uPC...: µPC...,
  uPD...: µPD...
- CAPACITORS
  uF :µF
- COILS
  uH : µH

Ref. No.	Part No.	Description			Remarks
	* A-4617-762-A	BD BOARD, COMPLETE			
		**********			
		(CAPACITOR)			
C101	1-163-038-00	CERAMIC CHIP	0.1uF		25V
C102	1-163-989-11	CERAMIC CHIP	0.033uF	10%	25V
C103	1-135-155-21	TANTALUM CHIP	4.7uF	10%	10V
C104	1-163-038-00	CERAMIC CHIP	0.1uF		25V
C105	1-126-607-11	ELECT CHIP	47uF	20%	4V
C106	1-126-607-11	ELECT CHIP	47uF	20%	4V
C107	1-126-607-11	ELECT CHIP	47uF	20%	4V
C108	1-163-038-00	CERAMIC CHIP	0.1uF		25V
C109	1-163-038-00	CERAMIC CHIP	0.1uF		25V
C110	1-163-989-11	CERAMIC CHIP	0.033uF	10%	25V
C111	1-164-346-11	CERAMIC CHIP	1uF		16V
C112	1-164-232-11	CERAMIC CHIP	0.01uF		50V
C113	1-164-232-11	CERAMIC CHIP	0.01uF		50V
C114	1-164-695-11	CERAMIC CHIP	0.0022uF	5%	50V
C115	1-164-695-11	CERAMIC CHIP	0.0022uF	5%	50V
C117	1-163-038-00	CERAMIC CHIP	0.1uF		25V
C118	1-163-038-00	CERAMIC CHIP	0.1uF		25V
C119	1-164-695-11	CERAMIC CHIP	0.0022uF	5%	50V
C120	1-163-989-11	CERAMIC CHIP	0.033uF	10%	25V
C151	1-163-019-00	CERAMIC CHIP	0.0068uF	10%	50V
C152	1-164-346-11	CERAMIC CHIP	1uF		16V
C153	1-163-135-00	CERAMIC CHIP	560PF	5%	50V
C154	1-164-695-11	CERAMIC CHIP	0.0022uF	5%	50V
C155	1-163-023-00	CERAMIC CHIP	0.015uF	5%	50V
C171	1-163-038-00	CERAMIC CHIP	0.1uF		25V
C172	1-163-038-00	CERAMIC CHIP	0.1uF		25V
C173	1-163-038-00	CERAMIC CHIP	0.1uF		25V
C174	1-163-038-00	CERAMIC CHIP	0.1uF		25V
C201	1-163-809-11	CERAMIC CHIP	0.047uF	10%	25V
C202	1-163-145-00	CERAMIC CHIP	0.0015uF	5%	50V
C203	1-163-038-00	CERAMIC CHIP	0.1uF		25V
C204	1-164-346-11	CERAMIC CHIP	1uF		16V
C205	1-164-346-11	CERAMIC CHIP	1uF		16V
C206	1-163-101-00	CERAMIC CHIP	22PF	5%	50V
C207	1-163-101-00	CERAMIC CHIP	22PF	5%	50V
C208	1-164-346-11	CERAMIC CHIP	1uF		16V
C209	1-164-346-11	CERAMIC CHIP	1uF		16V
C210	1-163-038-00	CERAMIC CHIP	0.1uF		25V
		(CONNECTOR)			
CN101	1-580-858-11	SOCKET, CONNECTOR (SMT) 5P			
CN102	1-580-866-11	SOCKET, CONNECTOR (SMT) 12P			
CN103	1-580-872-41	SOCKET, CONNECTOR (SMT) 19P			
		(DIODE)			
D101	8-719-976-96	DIODE	DTZ4.7B		
D201	8-719-988-62	DIODE	1SS355		
		(IC)			
IC101	8-752-050-82	IC	CXA1372Q		
IC102	8-759-823-48	IC	LA6525M		
IC103	8-759-636-20	IC	M54641FP		
IC201	8-752-337-26	IC	CXD2500AQ		
IC202	8-759-153-16	IC	uPD75116GF-760-3BE		
		(TRANSISTOR)			
Q101	8-729-805-45	TRANSISTOR	2SC3395		
Q201	8-729-602-21	TRANSISTOR	2SC4154-F		
		(RESISTOR)			
R101	1-216-097-00	METAL CHIP	100K	5%	1/10W
R102	1-216-097-00	METAL CHIP	100K	5%	1/10W
R103	1-216-091-00	METAL CHIP	56K	5%	1/10W
R104	1-216-099-00	METAL CHIP	120K	5%	1/10W
R105	1-216-069-00	METAL CHIP	6.8K	5%	1/10W
R106	1-216-061-00	METAL CHIP	3.3K	5%	1/10W
R107	1-216-114-00	METAL GLAZE	510K	5%	1/10W
R108	1-216-105-00	METAL CHIP	220K	5%	1/10W
R109	1-216-061-00	METAL CHIP	3.3K	5%	1/10W
R110	1-216-049-00	METAL CHIP	1K	5%	1/10W

DISPLAY MAIN TRANSFORMER LOADING

Ref. No.	Part No.	Description	Remarks
		〈 IC 〉	
IC401	8-759-154-14	IC uPD75206GF-716-3BE	
IC501	8-759-604-86	IC M5F7807L	
IC502	8-759-633-42	IC M5293L	
IC503	8-759-821-93	IC LA5601	
IC504	8-749-922-39	IC GP1F34T	
		〈 JUMPER 〉	
JW401	1-216-295-00	METAL CHIP 0 5% 1/10W	
		〈 TRANSISTOR 〉	
Q501	8-729-805-69	TRANSISTOR 2SA1341	
Q502	8-729-620-06	TRANSISTOR 2SC3052EF	
		〈 RESISTOR 〉	
R401	1-216-089-00	METAL CHIP 47K 5% 1/10W	
R402	1-216-089-00	METAL CHIP 47K 5% 1/10W	
R403	1-216-089-00	METAL CHIP 47K 5% 1/10W	
R404	1-216-089-00	METAL CHIP 47K 5% 1/10W	
R405	1-216-089-00	METAL CHIP 47K 5% 1/10W	
R406	1-216-089-00	METAL CHIP 47K 5% 1/10W	
R407	1-216-089-00	METAL CHIP 47K 5% 1/10W	
R408	1-216-093-00	METAL CHIP 68K 5% 1/10W	
R409	1-216-089-00	METAL CHIP 47K 5% 1/10W	
R410	1-216-089-00	METAL CHIP 47K 5% 1/10W	
R411	1-216-089-00	METAL CHIP 47K 5% 1/10W	
R412	1-216-089-00	METAL CHIP 47K 5% 1/10W	
R413	1-216-089-00	METAL CHIP 47K 5% 1/10W	
R501	1-216-001-00	METAL CHIP 10 5% 1/10W	
R502	1-216-049-00	METAL CHIP 1K 5% 1/10W	
R503	1-216-073-00	METAL CHIP 10K 5% 1/10W	
R504	1-216-073-00	METAL CHIP 10K 5% 1/10W	
R520	1-249-429-11	CARBON 10K 5% 1/4W	
		〈 SWITCH 〉	
S401	1-572-184-11	SWITCH, KEYBOARD (◀◀ |◁◁)	
S402	1-572-184-11	SWITCH, KEYBOARD (▶▶ ▷▷|)	
S403	1-572-184-11	SWITCH, KEYBOARD (▷II)	
S404	1-572-184-11	SWITCH, KEYBOARD (■)	
S405	1-572-184-11	SWITCH, KEYBOARD (OPEN/CLOSE ⏏)	
S406	1-572-184-11	SWITCH, KEYBOARD (EDIT)	
S407	1-572-184-11	SWITCH, KEYBOARD (CHECK)	
		〈 TRANSFORMER 〉	
T101	⚠ 1-450-341-11	TRANSFORMER, POWER	
		〈 CRYSTAL 〉	
X401	1-577-359-21	VIBRATOR, CERAMIC (4.19MHz)	

Ref. No.	Part No.	Description	Remarks
	* 1-638-308-11	LOADING BOARD	
		**********	
		〈 CONNECTOR 〉	
CN201	1-580-918-11	HOUSING, CONNECTOR 5P	
		〈 SWITCH 〉	
S291	1-571-924-11	SWITCH, LEAF (LOAD OUT)	
S292	1-571-924-11	SWITCH, LEAF (LOAD IN)	
		MISCELLANEOUS	
		**********	
12	1-575-001-11	WIRE, FLAT TYPE (12 CORE)	
69	1-590-909-21	WIRE, FLAT TYPE (19 CORE)	
70	1-590-530-11	WIRE, FLAT TYPE	
105	⚠ 8-848-144-11	DEVICE, OPTICAL KSS-240A	
106	1-575-001-11	WIRE, FLAT TYPE (12 CORE)	
M101	X-4917-523-3	ASSY, MOTOR (SPINDLE)	
M102	X-4917-504-1	ASSY, MOTOR (SLED)	
M291	A-4608-362-A	MOTOR (L) ASSY (LOADING)	
		ACCESSORY & PACKING MATERIAL	
		**********	
	4-920-941-01	SHEET (B), PROTECTION	
	* 4-941-548-01	LABEL, CLASS 1	
	* 4-945-079-01	CUSHION	
		HARDWARE LIST	
		**********	
# 1	7-682-547-09	SCREW +BVTT 3X6 (S)	
# 2	7-682-547-04	SCREW +BVTT 3X6 (S)	
# 3	7-685-647-79	SCREW +BVTP 3X10 TYPE2 N-S	
# 4	7-685-646-79	SCREW +BVTP 3X8 TYPE2 N-S	
# 5	7-621-775-10	SCREW +B 2.6X4	
# 6	7-624-105-04	STOP RING 2.3, TYPE -E	
# 7	7-685-234-19	SCREW +KTP 2.6X8 TYPE2NON-SLIT	
# 8	7-621-255-15	SCREW +P 2X3	
# 9	7-685-134-19	SCREW +BTP 2.6X8 TYPE2 N-S	
#10	7-682-548-04	SCREW +BVTT 3X8 (S)	

The components identified by mark ⚠ or dotted line with mark ⚠ are critical for safety.
Replace only with part number specified.

When indicating parts by reference number, please include the board name.

BD DISPLAY MAIN TRANSFORMER

Ref. No.	Part No.	Description				Remarks
R111	1-216-049-00	METAL CHIP	1K	5%	1/10W	
R112	1-216-083-00	METAL CHIP	27K	5%	1/10W	
R113	1-216-071-00	METAL CHIP	8.2K	5%	1/10W	
R114	1-216-105-00	METAL CHIP	220K	5%	1/10W	
R152	1-216-073-00	METAL CHIP	10K	5%	1/10W	
R153	1-216-085-00	METAL CHIP	33K	5%	1/10W	
R154	1-216-085-00	METAL CHIP	33K	5%	1/10W	
R155	1-216-093-00	METAL CHIP	68K	5%	1/10W	
R156	1-216-081-00	METAL CHIP	22K	5%	1/10W	
R157	1-236-427-11	NETWORK, RES	18K			
R159	1-216-079-00	METAL CHIP	18K	5%	1/10W	
R160	1-216-049-00	METAL CHIP	1K	5%	1/10W	
R171	1-216-001-00	METAL CHIP	10	5%	1/10W	
R172	1-216-001-00	METAL CHIP	10	5%	1/10W	
R173	1-216-001-00	METAL CHIP	10	5%	1/10W	
R174	1-216-001-00	METAL CHIP	10	5%	1/10W	
R201	1-216-061-00	METAL CHIP	3.3K	5%	1/10W	
R202	1-216-073-00	METAL CHIP	10K	5%	1/10W	
R203	1-216-061-00	METAL CHIP	3.3K	5%	1/10W	
R204	1-216-049-00	METAL CHIP	1K	5%	1/10W	
R205	1-216-089-00	METAL CHIP	47K	5%	1/10W	
R208	1-216-049-00	METAL CHIP	1K	5%	1/10W	
R209	1-216-081-00	METAL CHIP	22K	5%	1/10W	
R210	1-236-427-11	NETWORK, RES	18K			
R212	1-236-427-11	NETWORK, RES	18K			
R214	1-239-039-11	NETWORK, RES	22K			
R218	1-216-065-00	METAL CHIP	4.7K	5%	1/10W	
R219	1-216-073-00	METAL CHIP	10K	5%	1/10W	
R220	1-216-001-00	METAL CHIP	10	5%	1/10W	
R222	1-236-427-11	NETWORK, RES	18K			
R223	1-216-081-00	METAL CHIP	22K	5%	1/10W	
R224	1-216-081-00	METAL CHIP	22K	5%	1/10W	
R225	1-216-081-00	METAL CHIP	22K	5%	1/10W	
R226	1-216-081-00	METAL CHIP	22K	5%	1/10W	
		(VARIABLE RESISTOR)				
RV101	1-241-395-11	RES, ADJ, METAL GLAZE 10K				
RV102	1-241-395-11	RES, ADJ, METAL GLAZE 10K				
		(SWITCH)				
SW101	1-572-085-11	SWITCH, LEAF (LIMIT)				
		(CRYSTAL)				
X201	1-579-280-11	VIBRATOR, CRYSTAL (16.9344MHz)				
X202	1-579-216-11	VIBRATOR, CERAMIC (4MHz)				

****

Ref. No.	Part No.	Description				Remarks
	* A-4617-802-A	DISPLAY BOARD, COMPLETE				
		**********				
	* 1-638-264-11	MAIN BOARD				
		**********				
	* 1-638-266-11	TRANSFORMER BOARD				
		**********				
	* 1-573-099-11	HOUSING, CONNECTOR 12P				
	* 4-880-403-11	HEAT SINK				
	* 4-932-810-11	CUSHION (FL)				
		(CAPACITOR)				
C115	1-164-232-11	CERAMIC CHIP	0.01uF		50V	
C116	1-164-232-11	CERAMIC CHIP	0.01uF		50V	
C401	1-163-038-00	CERAMIC CHIP	0.1uF		25V	
C402	1-163-035-00	CERAMIC CHIP	0.047uF		50V	
C403	1-164-346-11	CERAMIC CHIP	1uF		16V	
C404	1-163-009-11	CERAMIC CHIP	0.001uF	10%	50V	
C501	1-126-939-11	ELECT	10000uF	20%	16V	
C502	1-124-907-11	ELECT	10uF	20%	50V	
C503	1-124-903-11	ELECT	1uF	20%	50V	
C504	1-164-346-11	CERAMIC CHIP	1uF		16V	
C505	1-126-063-11	ELECT	100uF	20%	63V	
C506	1-124-907-11	ELECT	10uF	20%	50V	
C507	1-124-903-11	ELECT	1uF	20%	50V	
C510	1-163-009-11	CERAMIC CHIP	0.001uF	10%	50V	
C513	1-136-165-00	FILM	0.1uF	5%	50V	
C521	1-126-176-11	ELECT	220uF	20%	10V	
C522	1-124-927-11	ELECT	4.7uF	20%	50V	
C524	1-136-165-00	FILM	0.1uF	5%	50V	
		(CONNECTOR)				
CN401	* 1-573-098-11	HOUSING, CONNECTOR 12P				
CN501	* 1-569-624-11	SOCKET, CONNECTOR 17P				
CN502	1-568-662-11	CONNECTOR, BOARD TO BOARD 6P				
CN601	* 1-573-149-11	SOCKET, CONNECTOR 19P				
CN901	1-568-668-11	CONNECTOR, BOARD TO BOARD 6P				
		(DIODE)				
D401	8-719-106-36	DIODE	RD8.2M-B3			
D402	8-719-104-34	DIODE	1S2836			
D403	8-719-104-34	DIODE	1S2836			
D501	8-719-210-39	DIODE	EC10QS-04			
D502	8-719-210-39	DIODE	EC10QS-04			
D503	8-719-210-33	DIODE	EC10DS2			
D505	8-719-106-17	DIODE	RD6.8M-B2			
D510	8-719-104-34	DIODE	1S2836			
		(FLUORESCENT TUBE)				
FL401	1-519-652-11	INDICATOR TUBE, FLUORESCENT				

When indicating parts by reference number, please include the board name.