clarion

Clarion Co., Ltd.
Export Division - 22-3, Shibuya 2-chome, Shibuyaku, Tokyo, 150 Japan Tel: 03-3400-1121
Service Dept. - 50 kamitoda, Toda-shi, Saitama, 335 Japan Tel: 048-443-1111 FAX:048-433-6996

Published by Service Dept.
298-5589-00 Mar. 1997 P
Printed in Japan

Service Manual

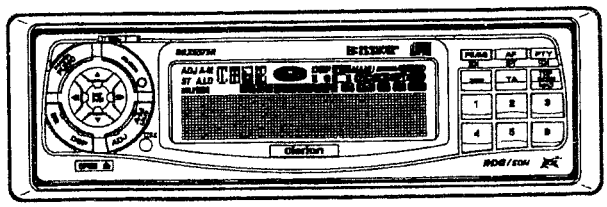

(DRX9375R)

RDS-EON/FM-MPX/MW/LW
Radio CD Combination with CD
Changer Control

Model **DRX9375R**
(PE-2238E-A:Black panel)

Model **DRX9375RW**
(PE-2238E-B:Grained panel)

SPECIFICATIONS

Radio section

Tuning system: PLL synthesizer tuner
Receiving frequencies:
FM:87.5 to 108MHz(0.05MHz steps)
MW:531 to 1602kHz(9kHz steps)
LW:153 to 279kHz(3kHz steps)

CD player section

System: Compact disc digital audio system
Frequency response: 5Hz to 20kHz(±1dB)
Signal to noise ratio: 100dB(1kHz)IHF-A
Dynamic range: 95dB(1kHz)
Distortion: 0.01%

General

Power supply voltage:
14.4V DC(10.8 to 15.6V allowable)
negative ground
Power consumption: Less than 3A
Auto antenna rated current:
500mA or less
Dimensions(mm): main unit:178(W)×50(H)×155(D)
remote control unit:40(W)×6.5(H)×86(D)
Weight: main unit:1.7kg
remote control unit:20g(including battery)

※ Specifications and design are subject to change without notice for further improvement.

FEATURES

1. ALPHA-TOUCH controller
2. RDS(AF,PS,PTY,EON,TP)
3. Anti-theft indicator
4. Dimmer function
5. Cellular input
6. DSP or Equalizer control
7. DCP(Detachable control panel)

COMPONENTS

PE-2238E-A/PE-2238E-B

Main unit	————	1
Remote controller	RCB-114-300	1
Battery cover	653-0299-01	1
Battery(CR2025)	————	1
Mounting bracket	300-9035-01	1
DCP case	335-5331-00	1
Parts bag	————	
Hook plate	330-8216-01	2
Lead holder	335-0833-01	1
Clip	335-3744-00	1
Spacer	345-3653-01	1
Screw	716-0726-01	1
Outer escutcheon (DRX9375R only)	940-7781-00	1
Outer escutcheon (DRX9375RW only)	940-7781-02	1

www.manualscenter.com

402

■ To engineers in charge of repair or inspection of our products.

Before repair or inspection,make sure to follow the instructions so that customers and Engineers in charge of repair or inspection can avoid suffering any risk or injury.

1. Use specified parts.
   The system uses parts with special safety features against fire and voltage.Use only parts with equivalent characteristics when replacing them.
   The use of unspecified parts shall be regarded as remodeling for which we shall not be liable.The onus of product liability (PL) shall not be our responsibility in cases where an accident or failure is as a result of unspecified parts being used.
2. Place the parts and wiring back in their original positions after replacement or re-wiring.
   For proper circuit construction,use of insulation tubes,bonding,gaps to PWB,etc,is involved.The wiring connection and routing to the PWB are specially planned using clamps to keep away from heated and high voltage parts.Ensure that they are placed back in their original positions after repair or inspection.
   If extended damage is caused due to negligence during repair,the legal responsibility shall be with the repairing company.
3. Check for safety after repair.
   Check that the screws,parts and wires are put back securely in their original position after repair.Ensure for safety reasons there is no possibility of secondary ploblems around the repaired spots.
   If extended damage is caused due to negligence of repair,the legal responsibility shall be with the repairing company.
4. Caution in removal and making wiring connection to the parts for the automobile.
   Disconnect the battery terminal after turning the ignition key off.If wrong wiring connections are made with the battery connected, a short circuit and/or fire may occur.If extensive damage is caused due to negligence of repair,the legal responsibility shall be with the repairing company.
5. Cautions regarding chips.
   Do not reuse removed chips even when no abnormality is observed in their appearance.Always replace them with new ones.(The chip parts include resistors,capacitors,diodes,transistors,etc).The negative pole of tantalum capacitors is highly susceptible to heat,so use special care when replacing them and check the operation afterwards.
6. Cautions in handling flexible PWB
   Before working with a soldering iron,make sure that the iron tip temperature is around 270℃.Take care not to apply the iron tip repeatedly(more than three times)to the same patterns.Also take care not to apply the tip with force.
7. Turn the unit OFF during disassembly and parts replacement.Recheck all work before you apply power to the unit.
8. Cautions in checking that the optical pickup lights up.
   The laser is focused on the disc reflection surface through the lens of the optical pickup. When checking that the laser optical diode lights up,keep your eyes more than 30cms away from the lens.Prolonged viewing of the laser within 30cms may damage your eyesight.
9. Cautions in handling the optical pickup
   The laser diode of the optical pickup can be damaged by electrostatic charge caused by your clothes and body.Make sure to avoid electrostatic charges on your clothes or body,or discharge static electricity before handling the optical pickup.

9-1. Laser diode
   The laser diode terminals are shorted for transportation in order to prevent electrostatic damage.After replacement,open the shorted circuit.When removing the pickup from the mechanism,short the terminals by soldering them to prevent this damage.

9-2. Actuator
   The actuator has a powerful magnetic circuit.If a magnetic material is put close to it.its characteristics will change.Ensure that no foreign substances enter through the ventilation slots in the cover.

9-3. Cleaning the lens
   Dust on the optical lens affects performance.To clean the lens,apply a small amount of isopropylalcohol to lens paper and wipe the lens gently.

■ NOTES

1. The DCP can easily be damaged by shocks.After removing it,be careful not to drop it or subject it to strong shocks.
2. The connector connecting the main unit and the DCP is an extremely important part.Be careful not to damage it by pressing on it withfingernails,screwdriver,etc.
3. CD-ROMs cannot be played with CD changer.

■ CAUTIONS

This appliance contains a laser system and is classified as a "CLASS 1 LASER PRODUCT".To use this model properly,read this Owner's Manual carefully and keep this manual for your future reference.In case of any trouble with this player,please contact your nearest "AUTHRIZED service station".To prevent direct exposure to the laser beam,do not to open the enclosure.

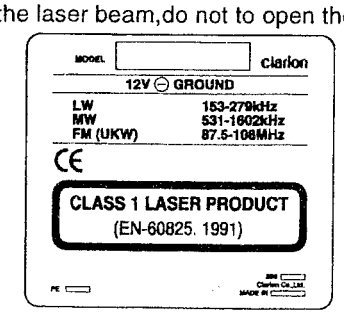

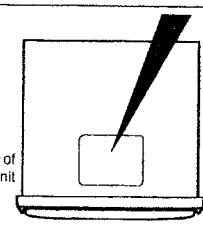

Buttom View of Main Unit

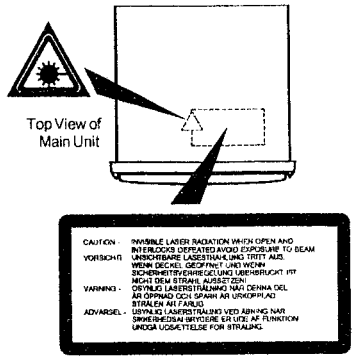

■TROUBLESHOOTING

Problem	Cause	Solution
Nothing happens when buttons are pressed. Display is not accurate.	Microprocessor has malfunctioned due to noise,etc.	Turn off the power,then press the DCP release button and remove the DCP. Press the reset button for about 2 seconds with a thin rod. 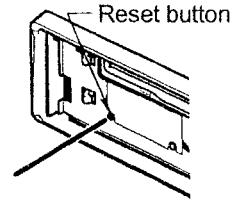
	DCP or main unit connectors are dirty.	Wipe the dirt off with a soft cloth moistened with cleaning alcohol.
DSP or equalizer does not operate.	Microprocessor has malfunctioned due to noise,etc.	Press Direct button 1 (for more than 2 seconds)while holding in the DSP button,then turn the power back on.

■ERROR DISPLAYS

If an error occurs,one of the following displays is displayed.
Take the measure described below to eliminate the problem.

Error display	Cause	Measure
CD ERROR2	A CD is caught inside the CD deck and is not ejected.	This is a failure of CD deck's mechanism and consult your store of purchase.
CD ERROR3	A CD cannot be played due to scratches,etc.	Replace with a non-scratched,non-warped-disc.
CD ERROR6	A CD is loaded upside-down inside the CD deck and does not play.	Eject the disc then reload it properly.
CDAC ERROR2	Disc inside the CD changer is not loaded.	This is a failure of CD changer's mechanism and consult your store of purchase.
CDAC ERROR3	A CD inside the CD changer cannot be played due to scratches,etc.	Replace with a non-scratched,non-warped-disc.
CDAC ERROR6	A CD inside the CD changer cannot be played because it is loaded upside-down.	Eject the disc then reload it properly.
EQ ERROR99	Communication error between main unit and expanded DSP/EQ.	Connect the expanded DSP/EQ connecting cable securely.

If an error display other than the ones described above appears,press the reset button.
If the problem persists,turn off the power and consult your store of purchase.

www.manualscenter.com

■ADJUSTMENTS

FM section

Item	Procedure	Measuring instrument
SD	1.Input the 98.1MHz/22dB μ(400Hz-MOD 30%)signal. 2.Turn on the power switch. 3.Press the A・M button and CH5 button at the same time(TEST MODE). 4.Adjust the「ST」indicator of LCD display to appear by VR2	SG
S-Meter	1.Input the 98.1MHz/30dB μ(400Hz-MOD 30%)signal. 2.Turn on the power switch. 3.Press the AF button and CH6 button at the same time(TEST MODE). 4.Adjust the reading of LCD display to「24----00」(2.4V±0.1V) by VR1.	SG

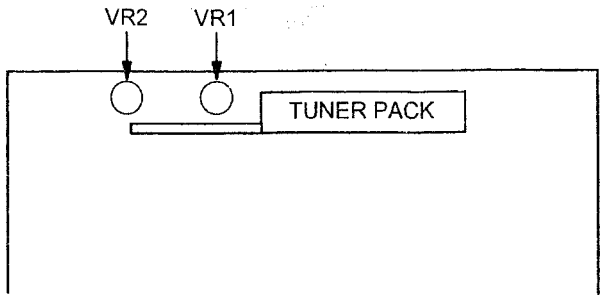

■BLOCK DIAGRAM

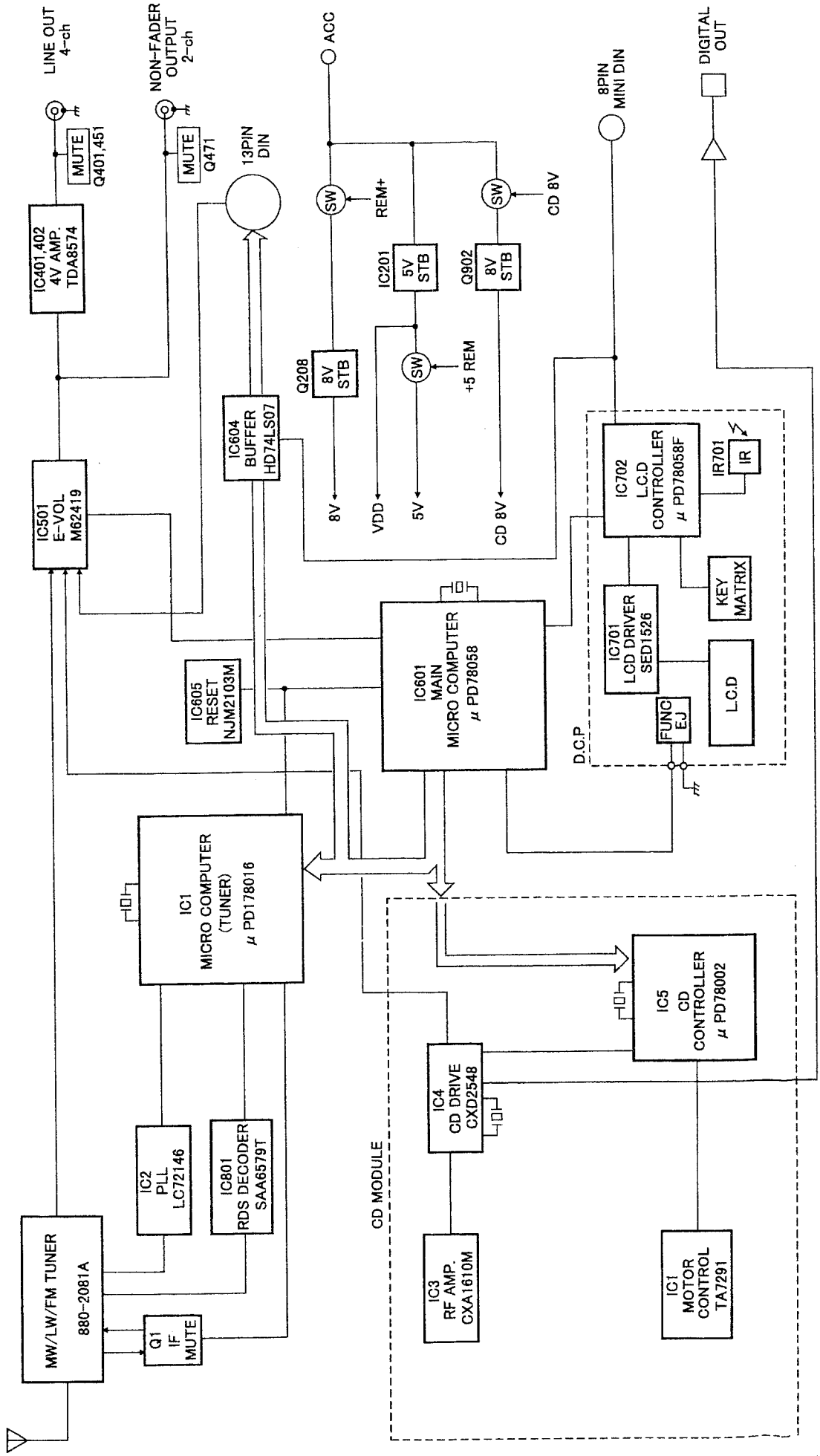

www.manualscenter.com

■EXPLANATION OF IC'S

■μPD178016GC-516-3B9 052-1316-00 Tuner Controller

Outward Form

80 pins, plastic QFP

Terminal Description

No.	Symbol	I/O	Function
1 2	N.C.	I	Not in use
3	RDS S-METER	I	RDS S-METER voltage detection
4	RDS NOISE	I	RDS noise detection
5	N.C.	I	Not in use
6	E/U	I	Low for Europe, Hi for USA
7	RDS DISCHGE	O	Hi for DISCHGE
8 \ 11	N.C.	I	Not in use
12 13 14	C-BUS SI C-BUS SO C-BUS SCK	I O I	C-BUS communication line
15	RDS +B REM	O	Switches RDS power supply: Low except for AM
16	SD OPEN	O	Makes port Hi when FM SD Hi is input
17	FM LOCAL	O	Switches FM DX / LO: Low when local
18	SD UP	O	Low when following-up RDS
19	AM LOCAL	O	Switches AM DX/LO: Low when local
20	N.C.	O	Not in use
21	PORT GND	–	I/O port GND terminal
22	PORT VDD	–	I/O port power supply
23	RDS MUTE	O	Hi when RDS IF MUTE is output
24 \ 26	N.C.	O	Not in use
27	IF REQ	O	Lo when RADIO IF signal requested
28	AM IFC	I	AM IF signal input terminal
29	FM IFC	I	FM IF signal input terminal
30	PLL VDD	–	PLL circuit power supply terminal
31	FM IN	I	FM OSC signal input terminal
32	AM IN	I	AM OSC signal input terminal
33	PLL GND	–	PLL circuit GND terminal
34	EO 0	O	AM error out signal output terminal
35	EO 1	O	FM error out signal output terminal
36	IC-TEST	–	Connect to GND
37	AM SD	I	AM SD detection: Hi for SD ON
38	FM SD	I	FM SD detection: Hi for SD ON
39	FM ST	I	FM ST detection: Low for ST
40 \ 44	N.C.	I	Not in use
45	RADIO MUTE	O	Outputs MUTE for RADIO micro computer
46	FM ON	O	Switches FM power supply
47	AM ON	O	Switches AM power supply
48	C-BUS SRQ	O	Outputs C-BUS SRQ signal
49 \ 52	N.C.	I	Not in use
53 54 55 56	PLL DI PLL SCK PLL DO PLL CE	I O O O	PLL IC control line
57 \ 65	N.C.	I	Not in use
66	RDS DATA	I	Inputs data from decoder
67	RDS CLK	I	Inputs CLK signal from decoder
68	ACC CONT	I	Detects ACC CONT
69 \ 73	N.C.	I	Not in use
74	REG CPU	–	CPU power supply terminal: Connected with condenser.
75	GND	–	Micro computer GND terminal
76 77	X 2 X 1	– I	Connecting crystal terminal (4.5 MHz)
78	REG OSC	–	Power supply terminal for oscillation circuits: Connected with condenser.
79	VDD	–	CPU power supply terminal
80	RESET	I	RESET signal input terminal

■ μPD78002BGC-643-AB8 052-5018-00 CD Mechanism Controller

Outward Form
64 pins, plastic QFP

Terminal Description

No.	Symbol	I/O	Function
1	$\overline{SRQ}$	O	Output terminal for C-BUS service request. Signal requesting for STATUS (mechanism status information) to be sent to master when CD module status changes.
2	$\overline{CHU\text{-}SW}$	I	CHUCKING SW input terminal. Terminal to detect completion of disc chucking
3 \ 5	NC	O	Not in use
6 7 8	B A C	I	Photo sensor input terminal Detecting the disc status incl. loading, chucking, etc..
9	VSS	–	GND terminal
10 11	MCCW MCW	O	Loading motor control terminal When a disc is in loading or EJECT motion, these terminals output signals by the following logic:

	Loading	Eject	Brake	Stop
MCW	H	L	H	L
MCCW	L	H	H	L

No.	Symbol	I/O	Function
12 \ 19	NC	O	Not in use
20	ACDT	I	Not in use
21	$\overline{XRST}$	O	Reset output terminal to CXD2548
22	$\overline{CLOCK}$	O	Clock output terminal to control CXD2548
23	$\overline{XLAT}$	O	Latch out put terminal to control CAXD 2548. Outputs latch pulse after transferring serial data
24	VSS	–	GND terminal
25	DATA	O	Data output terminal to control CXD2548
26	$\overline{SCLK}$	O	Clock output terminal to read coefficient from CDIC
27	NC	O	Not in use
28	$\overline{SENS}$	I	Input terminal to detect CD status by inputting signals incl. FZC, AS, TZC, SSTOP, BUSY, etc.
29	$\overline{SQSO}$	I	Data input terminal to read out SUB-Q data from CXD2548
30	NC	O	Not in use
31	$\overline{SQCK}$	O	Clock output terminal to read SUB-Q from CXD2548
32	$\overline{SYSM}$	O	Output terminal for analog MUTE circuit control
33 34	NC	O	Not in use
35	$\overline{RST}$	I	RESET input terminal
36	SCOR	I	Terminal to input sub code synchronization to be output from CXD2548.
37	ACC-CONT	I	C-BUS ACC CONT input terminal. If "L" is input during disc rotation (PLAY, FF, FB, SEARCH), it enters into power saving mode after disc rotation stops. If "L" is input in LOADING or EJECTING, it enters into power saving mode after completion of motion
38 39	NC	O	Not in use
40	VDD	–	Power supply terminal
41 42	X 2 X 1	O I	Terminal to connect ceramic resonator for system clock oscillation
43	ICO	–	Connected to GND
44	XT 2	O	Not in use
45	XT 1/P04	I	Connected to GND
46	IC1	–	Connected to GND
47	NC	O	Not in use
48	SYS-1	O	Output terminal to control system power 1. Control terminal to switch between power for loading motor driver IC and that for CD driver IC(+8V). Outputs "H" when ACC-CONT input terminal is "H" while this micro computer is in regular motion. Outputs "L" when ACC-CONT input terminal is "L" while this micro computer is in power saving mode. Power ON in "H". Power OFF in "L".
49	SYS-2	O	Output terminal to control system power 2. Control terminal to switch power to CDIC(+5V). Turns this terminal to "H" in CD PLAY. Other than that, "L". Power ON in "H". Power OFF in "L".
50 \ 54	NC	O	Not in use
55	IC 2	–	Connected to VDD
56	IC 3	–	Connected to GND
57 \ 60	K-0 \ K-3	I/O	Key input terminal in TEST mode. Function as output terminal in C-BUS communication mode
61	K-4	I	Terminal to detect TEST mode starting. Checks the terminal logic during hard reset and ACC ON (during ACC-CONT ="H") just after start of the program. Outputs "H" in C-BUS communication mode. Outputs "L" in TEST mode
62	SI	I	C-BUS serial data input terminal
63	SO	O	C-BUS serial data output terminal
64	SCK	I	C-BUS serial clock input terminal

www.manualscenter.com

■μPD7805FGC-054-3B9 052-3333-00 Master Micro Computer

Outward Form

80 pins, plastic QFP

Terminal Description

No.	Symbol	I/O	Function
1	N.C.	I	Not in use
2	OPEN EJECT	I	Set up terminal
3	E/U	I	Lo for Europe, Hi for USA
4	AVSS	–	GND terminal for A/D converter. Connected to GND
5	BLINK LED	O	Blinking LED output port
6	N.C.	I	Not in use
7	AVREF 1	I	Basic electrical power supply terminal for D/A converter. Connected to VDD
8 9 10	N.C.	I	Not in use
11 12 13 14 15	DISP SI DISP SO DISP SCK DISP RESET DISP BUSY	I O I/O O O	Communication line between DCP micro computer
16 17 18	C-BUS SI C-BUS SO C-BUS SCK	I O O	C-BUS communication line
19 \ 26	AD 0 \ AD 7	I/O	Communication line for address and data between S-RAM
27 28 29	A 8 A 9 A 10	O	Outputs address signal to S-RAM
30	N.C.	I	Not in use
31	C-BUS SRQ	I	C-BUS SRQ input terminal
32	ACC-CONT	O	ACC CONT signal output terminal
33	VSS	–	Micro computer GND terminal
34	N.C.	I	Not in use
35	DCP OUT	O	Hi in detecting A/d port
36	5V REM	O	Outputs power supply switching signal for REM 5V
37	SYS MUTE	O	Outputs system mute
38 39	N.C.	I	Not in use
40	RD	O	Outputs reading signal for S-RAM
41	WR	O	Outputs writing signal for S-RAM
42	S-RAM CE	O	S-RAM CE terminal
43	ASTB	O	Latch terminal for writing on S-RAM
44	PULSE DIMMER	O	Outputs blue LED dimmer, 4.4K
45 46	EVOL CLK EVOL DATA	O	Outputs signal to control electronic volume IC
47 \ 52	N.C.	I	Not in use
53	+B REM	O	Outputs switching signal for REM +5V power supply
54 55	MOTOR – MOTOR +	O	Output terminal to control signal for slope motor
56 57	CLOSE OPEN	I	Detects slope open/close
58	SLOPE MOTOR	O	Outputs power supply switching signal for slope
59	N.C.	O	Not in use
60	RESET	I	Reset signal input terminal
61	DISP REQ	I	Inputs interrupt signal from DCP micro computer
62	B/U DET	I	Detects B/U power supply
63	ACC DET	I	Detects ACC OFF
64	KEY INT	I	Inputs OPEN/FUNC key interrupt signal
65	N.C.	I	Not in use
66	PHONE INT	I	Inputs phone interrupt signal
67	TIME BASE	I	Inputs time base for clock counting
68	VDD	–	Micro computer VDD terminal
69 70	X 2 X 1	– I	Connecting terminal for cellular Lock (or chrystal) (4.19 MHz)
71	IC	–	Testing terminal
72 73	XT 2 XT 1	– I	Not in use
74	AVDD	–	Power supply terminal for A/D converter. Connected to VDD.
75	AVREF 0	I	Basic power supply for A/D converter
76	CD TEMP	I	Temperature detecting terminal
77	KEY A/D	I	Detects DCP/OPEN/FUNC key
78	N.C.	I	Not in use
79	ILLUMI DET	I	Detects illumination. Low for illumination ON
80	N.C.	I	Not in use

■μPD78058FGC-055-3B9 052-7022-00 Slave Micro Computer

Outward Form

80 pins, plastic QFP

Terminal Description

No.	Symbol	I/O	Function
1 \ 3	N.C.	O	Not in use
4	AVSS	–	A/D converter GND terminal. Connected to GND
5	DISP REQ	O	Outputs request to master micro computer
6	CONT OUT	O	Outputs LCD contrast control
7	AVREF 1	I	Basic electrical power supply terminal for D/A converter. Connected to VDD.
8 9	B.B. RXD B.B. TXD	I O	Communication line between B.B DSP
10	N.C.	O	Not in use
11 12 13	DISP SI DISP SO DISP SCK	I O I/O	Communication line between master micro computer
14 \ 18	N.C.	O	Not in use
19 \ 26	D 0 \ D 7	O	Control data line for LCD driver
27 \ 32	N.C.	O	Not in use
33	VSS	–	GND
34 35	N.C.	O	Not in use
36 \ 39	KO 0 \ KO 3	O	Key signal output terminal for key matrix
40	RD	O	LCD driver- read strove
41	WR	O	LCD driver -write strove
42	AO	O	Detects the data/command for the last bit
43	CS	O	Selecting terminal for LCD driver chip
44 \ 51	N.C.	O	Not in use
52 \ 57	KR 0 \ KR 5	I	Inputs key signal for key matrix
58 59	N.C.	O	Not in use
60	RESET	I	Reset signal input terminal
61	REMOCON	I	Remote signal input terminal
62	N.C.	I	Not in use
63	B.B. REQ	I	Inputs B.B DSP interrupt signal
64	DISP BUSY	I	Inputs busy signal from master micro computer
65 66 67	N.C.	I	Not in use
68	VDD	–	Micro computer VDD terminal
69 70	X 2 X 1	– I	Ceramic lock connecting terminal (4.91MHz)
71	IC	–	Not in use
72 73	XT 2 XT 1	– I	Not in use
74	AVDD	–	Power supply terminal for A/D converter. Connected to VDD
75	AVREF 0	I	Basic power supply for A/D converter. Connected to REM+5V
76	FHOTO TR DET	I	Sets output power by input DC voltage
77	TEMP DET	I	Temperature detecting terminal for LCD
78 \ 80	N.C.	O	Not in use

www.manualscenter.com

■EXPLODED VIEW · PARTS LIST

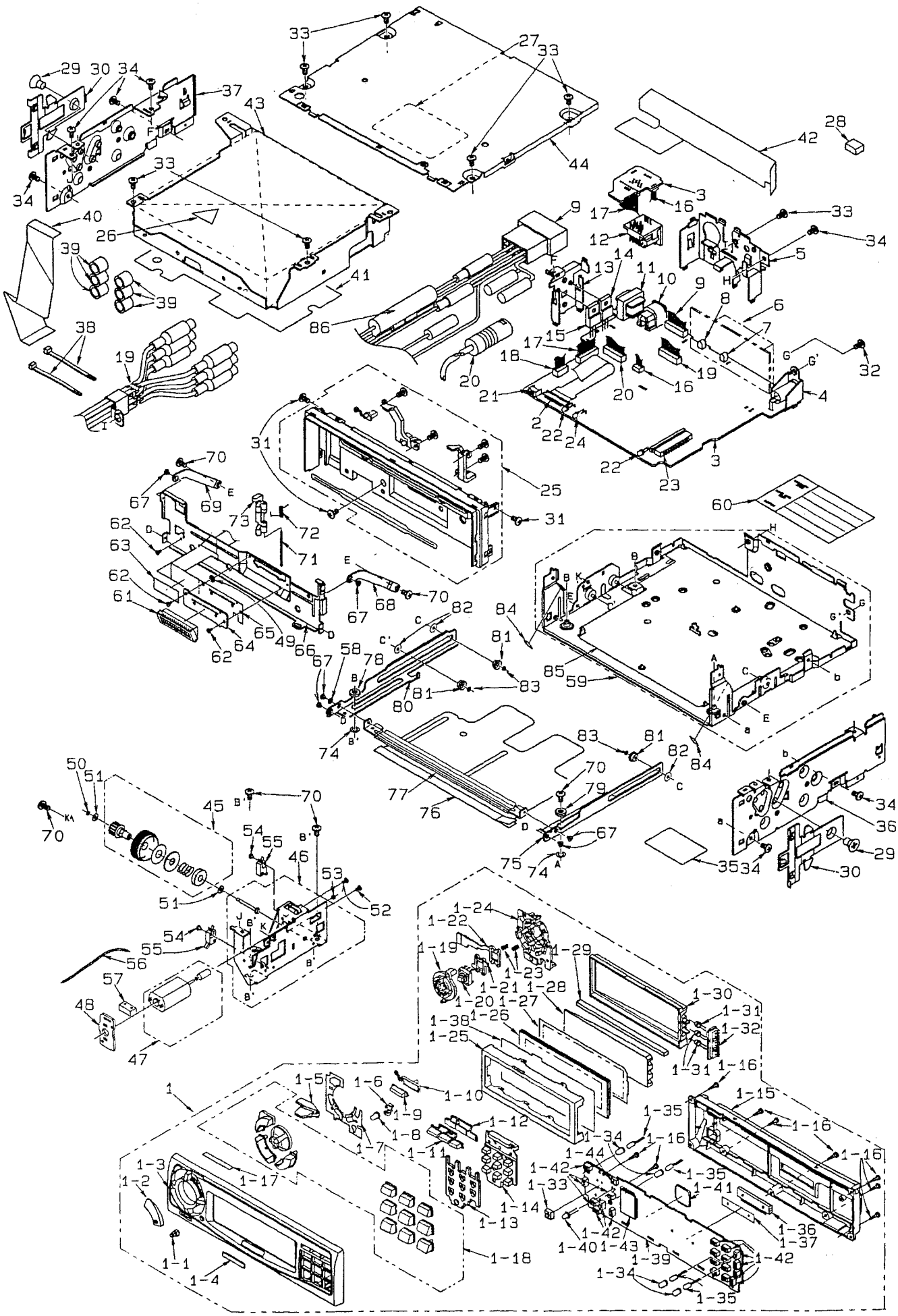

NO.	PART NO.	DESCRIPTION	Q'TY
1	940-1831A 940-1838A	DCP ASS'Y (DRX9375R) DCP ASS'Y(DRX9375RW)	1 1
1-1	335-5256-00	INDICATOR LENS	1
1-2	335-5347-00	IR FILTER	1
1-3	370-5664-01 370-5664-03	ESCUTCHEON(DRX9375R) ESCUTCHEON(DRX9375RW)	1 1
1-4	378-0134-00	BADGE	1
1-5	382-4513-00	BUTTON (RELEASE)	1
1-6	335-5257-00	BUTTON HOLDER (TITLE)	1
1-7	347-5432-00	FILM	1
1-8	382-4386-00	BUTTON (TITLE)	1
1-9	382-4511-00	BUTTON (OPEN)	1
1-10	335-5348-00	BUTTON HOLDER (OPEN)	1
1-11	382-4514-00	BUTTON (PS/AF/PTY)	1
1-12	335-5258-00	BUTTON HOLDER (PS/AF)	1
1-13	345-7863-00	SPONGE(R)	1
1-14	335-5259-00	ILLUMI PLATE (R)	1
1-15	335-5346-00	REAR-CVR	1
1-16	716-0872-11	SCREW	9
1-17	347-5444-00 822-0005-03	SHADE(DRX9375R) HEAT TUBE(DRX9375RW)	1 1
1-18	947-0431-00	BUTTON-ASS'Y	1
1-19	335-5275-00	JOG HOLDER	1
1-20	013-9901-00	SWITCH (JOG)	1
1-21	335-5276-00	SPACER	1
1-22	039-0857-00	PWB (JOG)	1
1-23	750-3248-00	SPRING	2
1-24	335-5277-00	ILLUMI PLATE	1
1-25	331-2080-00	LCD COVER	1
1-26	379-1090-71	INDICATOR	1
1-27	347-5408-00	CCS-FILM	1
1-28	335-5262-00	LCD ILLUMI	1
1-29	345-7864-00	RUBBER CONNECT	1
1-30	335-5260-00	LCD HOLDER	1
1-31	001-7030-00	LED	3
1-32	335-5263-00	LED HOLDER	1
1-33	013-6006-00	SWITCH	1
1-34	345-4441-37	LAMP CAP	4
1-35	017-0444-00	PILOTLAMP	4
1-36	076-0535-00	PLUG (15P)	1
1-37	347-5482-00	SPACER	1
1-38	347-5479-00	FILM	1
1-39	039-0944-00	SWITCH PWB	1
1-40	060-0150-00	PHOTO-TR	1
1-41	051-6018-00	IC (SED1526FE)	1
1-42	013-6302-51	SWITCH	19
1-43	052-7022-00	IC (μPD78058F)	1
1-44	060-4008-00	IR-RECEIVER	1
2	074-1048-67	OUTLET SOCKET	1
3	039-0942-00	MAIN PWB	1
4	092-9000-01	ANT-RECEPTACLE	1

NO.	PART NO.	DESCRIPTION	Q'TY
5	331-2030-00	CONNECTOR-BRKT	1
6	880-2081A	L/M/U RDS TUNER PACK	1
7	012-4863-13	VARIABLE-R (470KB)	1
8	012-4863-06	VARIABLE-R (10KB)	1
9	854-6319-00	EXTENSION LEAD (ISO)	1
10	075-0305-00	JACK	1
11	009-9008-80	CHOKE	1
12	074-1126-10	OUTLET SOCKET (13P)	1
13	313-1681-00	HEAT SINK	1
14	103-2012-00	TRANSISTOR (2SD2012)	1
15	101-0941-00	TRANSISTOR (2SB941)	1
16	854-4307-01	EXTENSION LEAD	1
17	854-4308-00	EXTENSION LEAD	1
18	854-4297-00	EXTENSION LEAD (MOTOR)	1
19	855-5405-00	RCA PIN CORD (6-CH)	1
20	855-8000-02	MINI-DIN CORD (8P)	1
21	013-6100-00	SWITCH (RESET)	1
22	001-0569-03	LED (DISC-IND)	2
23	074-0986-22	OUTLET SOCKET	1
24	001-0412-17	BLINK-LED	1
25	940-7801-00	INNER-ESCUT-ASS'Y	1
26	285-1426-00	GUIDE LABEL (LASER)	1
27	285-1340-00	GUIDE LABEL (CAUTION)	1
28	345-7017-00	SPACER	1
29	714-5008-41	MACHINE SCREW	2
30	750-2796-02	SPRING	2
31	714-2005-89	MACHINE SCREW	3
32	714-3005-81	MACHINE SCREW	1
33	731-3006-80	TAPTIGHT	7
34	731-2605-80	TAPTIGHT	7
35	286-8734-00 286-8751-00	SETPLATE(DRX9375R) SETPLATE(DRX9375RW)	1 1
36	305-0256-00	SIDE-CVR(R)	1
37	305-0255-00	SIDE-CVR(L)	1
38	335-0833-01	LEAD HOLDER	2
39	345-3799-00	CAP	6
40	816-2430-00	FLAT WIRE (22PX1.25)	1
41	347-5469-00	INSULATOR	1
42	347-5310-00	INSULATOR	1
43	929-0067-00	CD-MECH-MODULE (PMCD)	1
44	303-0460-00	UPPER-CVR	1
45	960-4409-00	T-LOAD GEAR ASS'Y	1
46	946-0062-00	GEAR BOX ASSY	1
47	948-0355-01	MOTOR ASSY	1
48	039-0915-00	MOTOR PWB	1
49	746-0888-01	SPACER	2
50	743-1500-10	E-RING	1
51	745-0646-00	WASHER	2
52	716-0882-00	MOTOR SCREW	2
53	621-0034-01	THRUST HOLDER	1

www.manualscenter.com

NO.	PART NO.	DESCRIPTION	Q'TY
54	716-0670-01	SCREW	2
55	013-3757-00	SWITCH (OPEN/CLOSE)	2
56	801-0610-64	VINYL-COAT-WIRE	1
57	076-0349-04	PLUG	1
58	347-5471-00	SPACER	1
59	946-0061-00	LOWER CASE ASS'Y	1
60	286-8735-00 286-8753-00	ID CARD LABEL(DRX9375R) ID CARD LABEL(DRX9375RW)	1 1
61	074-1145-00	OUTLET SOCKET	1
62	738-1725-17	PRECISION SCREW	3
63	291-0080-00	STICKER (FPC SHADE)	1
64	039-0914-00	CONNECTOR PWB	1
65	039-0807-00	PWB (SLOPE FPC)	1
66	331-2028-00	DCP-HOLDER	1
67	716-1715-02	DECO-SCREW	6
68	331-0577-00	LEVER(R)	1
69	331-0578-00	LEVER(L)	1
70	714-2605-81	MACHINE SCREW	6

NO.	PART NO.	DESCRIPTION	Q'TY
71	341-1633-00	SHAFT(HOOK)	1
72	750-3251-00	SPRING	1
73	335-5349-00	HOOK	1
74	746-0903-00	WASHER	2
75	683-0064-00	SLIDE PLATE (R)	1
76	347-5463-00	INSULATOR	1
77	331-2031-00	SLIDE ARM	1
78	340-4368-00	SPACER	1
79	340-4369-00	SPACER	1
80	683-0063-00	SLIDE PLATE (L)	1
81	610-0366-00	ROLLER	3
82	746-0902-00	WASHER	3
83	746-0901-00	WASHER	3
84	347-5470-00	SPACER	2
85	347-5464-00	INSULATOR	1
86	120-0030-00	FUSE (3A)	1

■ELECTRICAL PARTS LIST

Note) Several different parts of the same reference number are alternative parts. One of those parts is used in the set.

Main PWB

REF No.	PART No.	DESCRIPTION
C 1	178-2232-78	0.022 μF
C 2	178-2232-78	0.022 μF
C 3	183-2263-31	16V22 μF
C 4	178-2232-78	0.022 μF
C 5	178-1032-78	0.01 μF
C 6	178-2232-78	0.022 μF
C 7	178-2232-78	0.022 μF
C 9	178-5622-78	5600pF
C 10	178-1222-78	1200pF
C 11	183-2253-62	50V2.2 μF
C 12	178-1042-78	0.1 μF
C 13	178-1032-78	0.01 μF
C 14	176-1011-00	100pF CH
C 15	176-1011-00	100pF CH
C 16	176-1011-00	100pF CH
C 17	176-1011-00	100pF CH
C 18	176-1011-00	100pF CH
C 19	176-1801-00	18pF CH
C 20	176-1501-00	15pF CH
C 21	183-4763-11	6.3V47 μF
C 23	183-2263-11	6.3V22 μF
C 24	178-1042-78	0.1 μF
C 25	178-1042-78	0.1 μF
C 27	178-2242-78	0.22 μF
C 28	178-1532-78	0.015 μF
C 29	176-1011-00	100pF CH
C 30	178-1532-78	0.015 μF
C 201	184-4773-31	16V470 μF
C 202	172-1041-11	0.1 μF
C 203	183-1063-31	16V10 μF
C 204	172-4731-11	0.047 μF
C 205	178-2232-78	0.022 μF
C 206	183-1073-21	10V100 μF
C 207	042-0559-00	5.5V0.1 μF
C 208	183-1063-31	16V10 μF
C 209	178-1032-78	0.01 μF
C 210	183-2263-31	16V22 μF
C 290	183-1073-21	10V100 μF
C 298	183-1063-31	16V10 μF
C 401	183-1063-31	16V10 μF
C 402	183-1063-31	16V10 μF
C 403	183-4763-31	16V47 μF
C 404	178-1522-78	1500pF
C 405	182-1073-33	16V100 μF
C 406	182-1073-33	16V100 μF
C 407	178-1522-78	1500pF
C 408	183-1063-31	16V10 μF
C 409	183-1063-31	16V10 μF
C 451	183-1063-31	16V10 μF
C 452	183-1063-31	16V10 μF
C 453	183-4763-31	16V47 μF
C 454	178-1522-78	1500pF
C 455	182-1073-33	16V100 μF
C 456	182-1073-33	16V100 μF
C 457	178-1522-78	1500pF
C 458	183-1063-31	16V10 μF
C 459	183-1063-31	16V10 μF
C 471	183-1063-31	16V10 μF
C 472	183-1063-31	16V10 μF
C 491	183-1053-61	50V1 μF
C 492	183-2263-31	16V22 μF
C 502	183-4753-51	35V4.7 μF
C 503	183-2263-31	16V22 μF
C 504	183-2263-31	16V22 μF
C 505	176-2201-00	22pF CH
C 506	163-4753-50	35V4.7 μF
C 507	176-1511-00	150pF CH
C 509	178-6832-78	0.068 μF
C 510	163-4753-50	35V4.7 μF
C 511	163-2263-10	6.3V22 μF
C 512	173-4721-11	4700pF
C 513	172-5631-11	0.056 μF
C 514	173-4721-11	4700pF
C 515	183-1063-31	16V10 μF
C 552	183-2263-31	16V22 μF
C 553	183-2263-31	16V22 μF
C 554	183-4753-51	35V4.7 μF
C 555	176-2201-00	22pF CH
C 556	163-4753-50	35V4.7 μF
C 557	176-1511-00	150pF CH
C 559	178-6832-78	0.068 μF
C 560	163-4753-50	35V4.7 μF
C 561	163-2263-10	6.3V22 μF
C 562	173-4721-11	4700pF
C 563	172-5631-11	0.056 μF
C 564	173-4721-11	4700pF
C 565	183-1063-31	16V10 μF
C 591	183-1063-31	16V10 μF
C 592	178-2232-78	0.022 μF
C 601	178-1032-78	0.01 μF
C 602	176-1011-00	100pF CH
C 603	042-0458-06	10V 22 μF
C 604	178-1042-78	0.1 μF
C 605	178-2232-78	0.022 μF
C 606	178-1032-78	0.01 μF
C 607	178-4732-78	0.047 μF
C 608	178-1032-78	0.01 μF
C 609	178-1032-78	0.01 μF
C 610	178-2232-78	0.022 μF
C 611	183-1063-31	16V10 μF
C 612	178-1032-78	0.01 μF
C 613	178-1032-78	0.01 μF
C 614	178-1032-78	0.01 μF
C 616	183-1063-31	16V10 μF
C 617	176-1011-00	100pF CH
C 618	176-1011-00	100pF CH
C 619	176-1011-00	100pF CH
C 620	176-1011-00	100pF CH
C 621	178-1022-78	1000pF
C 622	178-1032-78	0.01 μF
C 623	178-1032-78	0.01 μF
C 624	178-1032-78	0.01 μF
C 625	176-1011-00	100pF CH
C 626	178-1032-78	0.01 μF
C 627	176-1011-00	100pF CH
C 640	176-1011-00	100pF CH
C 641	176-1011-00	100pF CH
C 642	176-1011-00	100pF CH
C 643	176-1011-00	100pF CH
C 644	176-1011-00	100pF CH
C 801	183-2253-62	50V2.2 μF
C 802	176-3311-00	330pF CH
C 804	178-5612-78	560pF
C 805	183-4763-11	6.3V47 μF
C 806	176-4701-00	47pF CH
C 807	176-8201-00	82pF CH
C 808	178-5612-78	560pF
C 809	178-5612-78	560pF
C 810	178-2232-78	0.022 μF
C 811	178-2232-78	0.022 μF
C 812	178-1032-78	0.01 μF
C 813	178-1032-78	0.01 μF
C 901	178-1032-78	0.01 μF
C 902	042-0452-01	10V220 μF
C 903	183-1063-31	16V10 μF
C 904	178-1032-78	0.01 μF
C 905	178-1032-78	0.01 μF
D 2	001-0540-00	HVM187WK
D 3	001-0516-00	MA111
D 201	001-0466-00	S5688B
D 202	001-0589-00	1SS145
D 203	001-0516-00	MA111
D 204	001-0330-00	1SS119
D 205	001-0516-00	MA111
D 206	001-0516-00	MA111
D 207	001-0466-00	S5688B
D 208	001-0516-00	MA111
D 209	001-0516-00	MA111
D 210	001-0423-22	MA4075
D 211	001-0377-11	MA4030M
D 299	001-0377-46	MA4091L
D 491	001-0516-00	MA111
D 492	001-0516-00	MA111
D 493	001-0377-45	MA4082H
D 591	001-0516-00	MA111
D 592	001-0516-00	MA111
D 601	001-0516-00	MA111
D 602	001-0516-00	MA111
D 604	001-0516-00	MA111
D 605	001-0516-00	MA111
D 606	001-0466-00	S5688B
D 607	001-0516-00	MA111
D 608	001-0412-17	GC-3HD8
D 609	001-0569-03	MPY3371X
D 610	001-0569-03	MPY3371X
D 801	001-0516-00	MA111
D 802	001-0516-00	MA111
D 901	001-0516-00	MA111
D 902	001-0516-00	MA111
D 903	001-0377-46	MA4091L
IC 1	052-1316-00	μPD178016GC-516-3B9
IC 2	051-6201-00	LC72146M
IC 201	051-3201-00	AN77L06
IC 401	051-5810-00	TDA8574T
IC 402	051-5810-00	TDA8574T
IC 501	051-5008-00	M62419FP
IC 502	051-0350-55	NJM4558M
IC 601	052-3333-00	μPD78058FGC-054-3B9
IC 602	051-1051-05	TC74HC573A
IC 603	051-1046-46	LC3517BML-12
IC 604	051-7400-06	HD74LS07FP
IC 605	051-0869-55	NJM2103M
IC 606	051-1014-05	TA7291F
IC 801	051-1819-00	SAA6579T
IC 802	051-0350-55	NJM4558M
IC 901	051-1443-06	TC7WU04F
J 601	074-0986-22	
J 602	074-1048-17	
L 1	010-2330-02	0.33 μH
L 2	010-4007-00	
L 3	010-2230-64	2.2 μH
L 4	010-2230-76	22 μH
L 5	010-2230-76	22 μH
L 6	010-2330-36	220 μH
L 8	010-2230-64	2.2 μH
L 201	010-2230-76	22 μH
L 290	010-2330-36	220 μH
L 601	010-2230-64	2.2 μH
L 602	010-2198-56	2.2 μH
L 605	010-2198-56	2.2 μH
L 606	010-2230-76	22 μH
L 801	010-2230-64	2.2 μH
Q 1	103-1306-00	2SD1306
Q 2	125-0002-03	RN2403
Q 3	125-2004-03	RN1403
Q 4	100-1162-00	2SA1162
Q 5	100-1298-00	2SA1298
Q 6	108-0536-00	2SK536
Q 201	101-1237-50	2SB1237QR
Q 202	125-2004-03	RN1403
Q 203	125-2004-03	RN1403
Q 204	125-2004-03	RN1403
Q 205	100-1162-00	2SA1162
Q 206	101-0941-00	2SB941

www.manualscenter.com

REF No.	PART No.	DESCRIPTION
Q 207	100-1298-00	2SA1298
Q 208	103-1802-60	2SD1802FA-R.S.T
Q 209	125-0002-02	RN2402
Q 210	125-2004-03	RN1403
Q 211	101-1237-50	2SB1237QR
Q 212	125-2004-03	RN1403
Q 213	125-0002-06	RN2406
Q 214	125-2004-06	RN1406
Q 298	108-0241-50	2SK241Y.GR
Q 299	103-2118-00	2SD2118
Q 401	125-4001-00	XN1504
Q 451	125-4001-00	XN1504
Q 471	125-4001-00	XN1504
Q 491	125-0002-06	RN2406
Q 493	125-0002-06	RN2406
Q 494	125-2004-06	RN1406
Q 495	125-2004-06	RN1406
Q 496	102-2712-00	2SC2712
Q 497	102-2712-00	2SC2712
Q 604	125-2004-03	RN1403
Q 607	100-1162-00	2SA1162
Q 608	102-2712-00	2SC2712
Q 609	100-1298-00	2SA1298
Q 610	102-2712-00	2SC2712
Q 611	125-2004-03	RN1403
Q 613	102-2712-00	2SC2712
Q 801	125-2004-02	RN1402
Q 901	100-1162-00	2SA1162
Q 902	103-2012-00	2SD2012
Q 903	100-1162-00	2SA1162
Q 904	125-2004-03	RN1403
R 1	117-1041-10	1/10W 100kΩ
R 3	117-2221-10	1/10W 2.2kΩ
R 4	117-8221-10	1/10W 8.2kΩ
R 5	117-1041-10	1/10W 100kΩ
R 6	117-1021-10	1/10W 1kΩ
R 7	117-5631-10	1/10W 56kΩ
R 8	117-5621-10	1/10W 5.6kΩ
R 9	117-1031-10	1/10W 10kΩ
R 10	117-1031-10	1/10W 10kΩ
R 11	117-2221-10	1/10W 2.2kΩ
R 12	117-2221-10	1/10W 2.2kΩ
R 13	111-3311-91	1/4WS 330Ω
R 14	111-1031-91	1/4WS 10kΩ
R 15	117-1231-10	1/10W 12kΩ
R 16	117-1021-10	1/10W 1kΩ
R 17	117-2221-10	1/10W 2.2kΩ
R 18	117-1021-10	1/10W 1kΩ
R 19	117-1031-10	1/10W 10kΩ
R 20	117-1031-10	1/10W 10kΩ
R 21	117-4721-10	1/10W 4.7kΩ
R 22	117-1021-10	1/10W 1kΩ
R 23	117-1021-10	1/10W 1kΩ
R 24	117-1021-10	1/10W 1kΩ
R 25	117-1031-10	1/10W 10kΩ
R 26	117-2231-10	1/10W 22kΩ
R 27	117-1041-10	1/10W 100kΩ
R 28	117-1041-10	1/10W 100kΩ
R 29	117-1041-10	1/10W 100kΩ
R 30	117-1021-10	1/10W 1kΩ
R 201	117-1031-10	1/10W 10kΩ
R 202	111-1221-91	1/4WS 1.2kΩ
R 203	117-4721-10	1/10W 4.7kΩ
R 204	111-2221-91	1/4WS 2.2kΩ
R 205	117-1031-10	1/10W 10kΩ

REF No.	PART No.	DESCRIPTION
R 206	117-1031-10	1/10W 10kΩ
R 207	111-1801-91	1/4WS 18Ω
R 208	111-1591-91	1/4WS 1.5Ω
R 209	111-1591-91	1/4WS 1.5Ω
R 210	111-1591-91	1/4WS 1.5Ω
R 211	111-1591-91	1/4WS 1.5Ω
R 212	117-1031-10	1/10W 10kΩ
R 213	111-1221-91	1/4WS 1.2kΩ
R 214	111-3911-91	1/4WS 390Ω
R 215	111-4700-91	1/4WS 47Ω
R 216	111-1221-91	1/4WS 1.2kΩ
R 217	111-2711-91	1/4WS 270Ω
R 218	111-2221-91	1/4WS 2.2kΩ
R 401	117-3631-10	1/10W 36kΩ
R 402	117-2431-10	1/10W 24kΩ
R 403	117-3631-10	1/10W 36kΩ
R 404	117-2431-10	1/10W 24kΩ
R 405	117-2231-10	1/10W 22kΩ
R 406	117-2231-10	1/10W 22kΩ
R 407	117-3311-10	1/10W 330Ω
R 408	117-3311-10	1/10W 330Ω
R 451	117-3631-10	1/10W 36kΩ
R 452	117-2431-10	1/10W 24kΩ
R 453	117-3631-10	1/10W 36kΩ
R 454	117-2431-10	1/10W 24kΩ
R 455	117-2231-10	1/10W 22kΩ
R 456	117-2231-10	1/10W 22kΩ
R 457	117-3311-10	1/10W 330Ω
R 458	117-3311-10	1/10W 330Ω
R 471	117-2231-10	1/10W 22kΩ
R 472	117-2231-10	1/10W 22kΩ
R 473	117-3311-10	1/10W 330Ω
R 474	117-3311-10	1/10W 330Ω
R 490	117-3921-10	1/10W 3.9kΩ
R 491	117-1021-10	1/10W 1kΩ
R 492	117-1021-10	1/10W 1kΩ
R 493	117-1021-10	1/10W 1kΩ
R 494	117-3321-10	1/10W 3.3kΩ
R 495	111-1021-91	1/4WS 1kΩ
R 496	117-1021-10	1/10W 1kΩ
R 497	117-1021-10	1/10W 1kΩ
R 498	117-4721-10	1/10W 4.7kΩ
R 499	117-2231-10	1/10W 22kΩ
R 502	117-8221-10	1/10W 8.2kΩ
R 503	117-5631-10	1/10W 56kΩ
R 504	117-5631-10	1/10W 56kΩ
R 505	117-9131-10	1/10W 91kΩ
R 506	117-6831-10	1/10W 68kΩ
R 507	117-6821-10	1/10W 6.8kΩ
R 508	117-3331-10	1/10W 33kΩ
R 552	117-8221-10	1/10W 8.2kΩ
R 553	117-5631-10	1/10W 56kΩ
R 554	117-5631-10	1/10W 56kΩ
R 555	117-9131-10	1/10W 91kΩ
R 556	117-6831-10	1/10W 68kΩ
R 557	117-6821-10	1/10W 6.8kΩ
R 558	117-3331-10	1/10W 33kΩ
R 590	117-4721-10	1/10W 4.7kΩ
R 591	117-4721-10	1/10W 4.7kΩ
R 592	117-1021-10	1/10W 1kΩ
R 593	117-1221-10	1/10W 1.2kΩ
R 594	117-1041-10	1/10W 100kΩ
R 595	117-1241-10	1/10W 120kΩ
R 601	117-1031-10	1/10W 10kΩ
R 602	117-1031-10	1/10W 10kΩ

REF No.	PART No.	DESCRIPTION
R 603	117-1031-10	1/10W 10kΩ
R 604	117-1031-10	1/10W 10kΩ
R 605	117-4721-10	1/10W 4.7kΩ
R 606	117-4721-10	1/10W 4.7kΩ
R 608	117-1031-10	1/10W 10kΩ
R 609	117-2231-10	1/10W 22kΩ
R 610	117-4721-10	1/10W 4.7kΩ
R 611	117-1021-10	1/10W 1kΩ
R 612	117-1021-10	1/10W 1kΩ
R 613	117-1021-10	1/10W 1kΩ
R 614	117-5611-10	1/10W 560Ω
R 615	117-2231-10	1/10W 22kΩ
R 616	117-1031-10	1/10W 10kΩ
R 617	117-4731-10	1/10W 47kΩ
R 618	117-5621-10	1/10W 5.6kΩ
R 619	117-2731-10	1/10W 27kΩ
R 620	117-1031-10	1/10W 10kΩ
R 621	117-1031-10	1/10W 10kΩ
R 622	117-1221-10	1/10W 1.2kΩ
R 623	117-4731-10	1/10W 47kΩ
R 624	117-2231-10	1/10W 22kΩ
R 625	117-2731-10	1/10W 27kΩ
R 626	117-4321-10	1/10W 4.3kΩ
R 627	117-1031-10	1/10W 10kΩ
R 628	117-1241-10	1/10W 120kΩ
R 629	117-2231-10	1/10W 22kΩ
R 630	117-2231-10	1/10W 22kΩ
R 631	117-4721-10	1/10W 4.7kΩ
R 632	117-4731-10	1/10W 47kΩ
R 633	117-4731-10	1/10W 47kΩ
R 634	117-2231-10	1/10W 22kΩ
R 635	117-1041-10	1/10W 100kΩ
R 636	111-8201-91	1/4WS 82Ω
R 639	117-4721-10	1/10W 4.7kΩ
R 640	117-1011-10	1/10W 100Ω
R 641	117-1041-10	1/10W 100kΩ
R 642	117-1041-10	1/10W 100kΩ
R 643	117-1041-10	1/10W 100kΩ
R 644	117-1041-10	1/10W 100kΩ
R 645	117-4721-10	1/10W 4.7kΩ
R 646	117-1031-10	1/10W 10kΩ
R 647	117-1031-10	1/10W 10kΩ
R 650	117-1041-10	1/10W 100kΩ
R 801	117-2221-10	1/10W 2.2kΩ
R 802	117-3321-10	1/10W 3.3kΩ
R 805	117-2731-10	1/10W 27kΩ
R 806	117-1231-10	1/10W 12kΩ
R 807	117-1031-10	1/10W 10kΩ
R 808	117-1041-10	1/10W 100kΩ
R 809	117-2211-10	1/10W 220Ω
R 901	117-1001-10	1/10W 10Ω
R 902	117-1031-10	1/10W 10kΩ
R 903	117-3321-10	1/10W 3.3kΩ
R 904	117-3321-10	1/10W 3.3kΩ
R 905	111-2211-91	1/4WS 220Ω
R 906	117-1031-10	1/10W 10kΩ
S 601	013-6100-00	
SUP1	060-0122-10	DSP-201M-S00B
T 201	009-9008-80	
VR 1	012-4863-13	470kΩ
VR 2	012-4863-06	10kΩ
X 1	060-0318-00	KBR-4.5MWS
X 2	061-1066-00	7.2MHz
X 601	060-0266-00	KBR-4.19MWS
X 801	061-3013-00	4.33MHz

Motor PWB

REF No.	PART No.	DESCRIPTION
C 913	176-2221-00	2200pF
C 914	176-2221-00	2200pF

Sensor PWB(CD MECHANISM)

REF No.	PART No.	DESCRIPTION
Q 101	060-0252-01	PT4850F
Q 102	060-0252-01	PT4850F
Q 103	060-0252-01	PT4850F

Switch PWB

REF No.	PART No.	DESCRIPTION
C 701	178-1032-78	0.01 μF
C 702	042-0397-00	16V1 μF TAN
C 703	178-1032-78	0.01 μF
C 704	042-0397-00	16V1 μF TAN
C 705	178-1042-78	0.1 μF
C 706	178-1042-78	0.1 μF
C 707	178-1042-78	0.1 μF
C 708	178-1042-78	0.1 μF
C 709	178-1042-78	0.1 μF
C 710	178-2232-78	0.022 μF
C 711	176-1011-00	100pF CH
C 712	178-2232-78	0.022 μF
C 713	042-0416-02	6.3V10 μF
C 714	178-1032-78	0.01 μF
C 716	042-0416-02	6.3V10 μF
C 717	042-0416-02	6.3V10 μF
C 719	178-2222-78	2200pF
CCT701	050-0122-00	10kΩx4
D 701	001-7030-00	NSPB310A
D 702	001-7030-00	NSPB310A
D 703	001-7030-00	NSPB310A
D 704	001-0516-00	MA111
IC 701	051-6018-00	SED1526FEA
IC 702	052-7022-00	μPD78058FGC-055-3B9
IR 701	060-4008-00	
L 701	010-2198-56	2.2 μH
L 702	010-2199-16	2.2 μH J

REF No.	PART No.	DESCRIPTION
P 701	076-0535-00	
PL 701	017-0444-00	14V 50mA
PL 702	017-0444-00	14V 50mA
PL 703	017-0444-00	14V 50mA
PL 704	017-0444-00	14V 50mA
Q 701	060-0150-00	PN268-R
R 702	032-0090-84	1MΩ
R 703	032-0092-80	1/10W 330Ω
R 704	032-0092-80	1/10W 330Ω
R 705	032-0092-80	1/10W 330Ω
R 706	032-0092-80	1/10W 330Ω
R 707	032-0092-80	1/10W 330Ω
R 708	032-0092-80	1/10W 330Ω
R 710	117-1031-10	1/10W 10kΩ
R 711	117-1031-10	1/10W 10kΩ
R 712	117-1031-10	1/10W 10kΩ
R 713	117-1011-10	1/10W 100Ω
R 714	117-2241-10	1/10W 220kΩ
R 715	117-1031-10	1/10W 10kΩ
R 716	117-3921-10	1/10W 3.9kΩ
R 717	117-1241-10	1/10W 120kΩ
R 718	117-1011-10	1/10W 100Ω
R 719	117-1011-10	1/10W 100Ω
R 720	117-1011-10	1/10W 100Ω
R 721	117-1011-10	1/10W 100Ω
R 722	117-1011-10	1/10W 100Ω
R 723	117-1011-10	1/10W 100Ω
R 724	117-1011-10	1/10W 100Ω

REF No.	PART No.	DESCRIPTION
R 725	117-1011-10	1/10W 100Ω
R 726	117-1011-10	1/10W 100Ω
R 728	032-0090-83	910kΩ
R 729	032-0090-76	39kΩ
S 701	013-6006-00	
S 706	013-6302-01	
S 707	013-6302-01	
S 708	013-6302-01	
S 709	013-6302-01	
S 710	013-6302-01	
S 711	013-6302-01	
S 712	013-6302-01	
S 713	013-6302-01	
S 714	013-6302-01	
S 715	013-6302-01	
S 716	013-6302-01	
S 717	013-6302-01	
S 718	013-6302-01	
S 719	013-6302-01	
S 720	013-6302-01	
S 721	013-6302-01	
S 722	013-6302-01	
S 723	013-6302-01	
S 724	013-6302-01	
S 750	013-9901-00	
TH 701	002-0216-07	22kΩ
X 701	060-1009-00	4.91MHz

Mechanism PWB(CD MECHANISM)

REF No.	PART No.	DESCRIPTION
C 1	178-1032-78	0.01 μF
C 2	178-1042-78	0.1 μF
C 3	178-1032-78	0.01 μF
C 4	182-4763-13	6.3V47 μF
C 5	178-1042-78	0.1 μF
C 6	182-4763-13	6.3V47 μF
C 7	178-1042-78	0.1 μF
C 8	176-1801-00	18pF CH
C 9	176-2096-00	2pF CJ
C 10	182-1073-15	6.3V100 μF
C 12	178-1042-78	0.1 μF
C 13	178-1042-78	0.1 μF
C 14	178-1042-78	0.1 μF
C 15	176-1007-00	10pF CH
C 16	178-2212-78	220pF
C 17	178-1032-78	0.01 μF
C 18	178-1042-78	0.1 μF
C 19	178-2212-78	220pF
C 20	178-4745-79	0.47 μF
C 21	178-1032-78	0.01 μF
C 22	178-2212-78	220pF
C 23	178-1042-78	0.1 μF
C 24	178-1522-78	1500pF
C 25	179-4732-78	0.047 μF
C 26	178-1042-78	0.1 μF
C 27	178-1042-78	0.1 μF
C 28	178-1042-78	0.1 μF
C 29	178-1042-78	0.1 μF
C 30	178-6812-78	680pF
C 31	176-1511-00	150pF CH
C 32	178-1042-78	0.1 μF
C 33	176-1007-00	10pF CH
C 34	176-1007-00	10pF CH
C 35	178-6812-78	680pF
C 36	176-1511-00	150pF CH
C 37	178-1042-78	0.1 μF
C 38	178-1042-78	0.1 μF
C 39	182-1063-33	16V10 μF

REF No.	PART No.	DESCRIPTION
C 40	178-1042-78	0.1 μF
C 41	182-1063-33	16V10 μF
C 42	182-1063-33	16V10 μF
C 43	182-1063-33	16V10 μF
C 44	182-1063-33	16V10 μF
C 45	182-1073-33	16V100 μF
C 46	176-1201-00	12pF CH
C 47	178-1032-78	0.01 μF
C 48	178-2225-79	2200pF
D 1	001-0563-00	GL380
D 2	001-0563-00	GL380
D 3	001-0563-00	GL380
D 4	001-0356-05	1SS181
D 5	001-0528-32	MA8056-M
IC 1	051-1014-10	TA7291S
IC 2	051-6015-05	BA6392FP
IC 3	051-1971-00	CXA1610M
IC 4	051-6318-00	CXD2548R
IC 5	052-5018-00	μPD78002BGC-643-AB8
J 1	074-1143-06	
J 2	074-1138-17	
L 1	010-2155-03	10 μH
Q 1	101-1237-50	2SB1237QR
Q 3	103-1754-64	2SD1754A-P,Q
Q 4	125-0002-02	RN2402
Q 5	125-2004-02	RN1402
R 1	117-8231-10	1/10W 82kΩ
R 2	117-1031-10	1/10W 10kΩ
R 3	111-2711-91	1/4WS 270Ω
R 4	117-1031-10	1/10W 10kΩ
R 5	117-1231-10	1/10W 12kΩ
R 6	117-1031-10	1/10W 10kΩ
R 7	117-6821-10	1/10W 6.8kΩ
R 8	117-5631-10	1/10W 56kΩ
R 9	117-2231-10	1/10W 22kΩ
R 10	117-1011-10	1/10W 100Ω
R 11	117-2201-10	1/10W 22Ω

REF No.	PART No.	DESCRIPTION
R 12	117-1041-10	1/10W 100kΩ
R 13	117-3331-10	1/10W 33kΩ
R 14	117-3631-10	1/10W 36kΩ
R 15	117-1241-10	1/10W 120kΩ
R 16	117-3631-10	1/10W 36kΩ
R 17	117-1031-10	1/10W 10kΩ
R 18	117-1041-10	1/10W 100kΩ
R 19	117-1051-10	1/10W 1MΩ
R 20	117-1031-10	1/10W 10kΩ
R 21	117-3321-10	1/10W 3.3kΩ
R 22	117-6821-10	1/10W 6.8kΩ
R 23	117-1051-10	1/10W 1MΩ
R 24	117-1041-10	1/10W 100kΩ
R 25	117-4741-10	1/10W 470kΩ
R 26	117-1231-10	1/10W 12kΩ
R 27	117-1231-10	1/10W 12kΩ
R 28	117-1231-10	1/10W 12kΩ
R 29	117-4711-10	1/10W 470Ω
R 30	117-1231-10	1/10W 12kΩ
R 31	117-1231-10	1/10W 12kΩ
R 32	117-1231-10	1/10W 12kΩ
R 33	117-3331-10	1/10W 33kΩ
R 34	117-4731-10	1/10W 47kΩ
R 35	117-1041-10	1/10W 100kΩ
R 36	117-1041-10	1/10W 100kΩ
R 37	117-1041-10	1/10W 100kΩ
R 38	117-3331-10	1/10W 33kΩ
R 39	117-3331-10	1/10W 33kΩ
R 40	117-3331-10	1/10W 33kΩ
R 41	117-1041-10	1/10W 100kΩ
R 42	117-3331-10	1/10W 33kΩ
R 43	117-3331-10	1/10W 33kΩ
R 44	117-3331-10	1/10W 33kΩ
R 45	117-4731-10	1/10W 47kΩ
R 48	117-3911-10	1/10W 390Ω
R 49	117-1021-10	1/10W 1kΩ
X 1	061-1087-50	16.9344MHz
X 2	060-0322-00	4.0MHz

www.manualscenter.com

■EXPLODED VIEW • PARTS LIST (PARTS LIST on page18)

CD mechanism section : 929-0067-00(PM-CD)

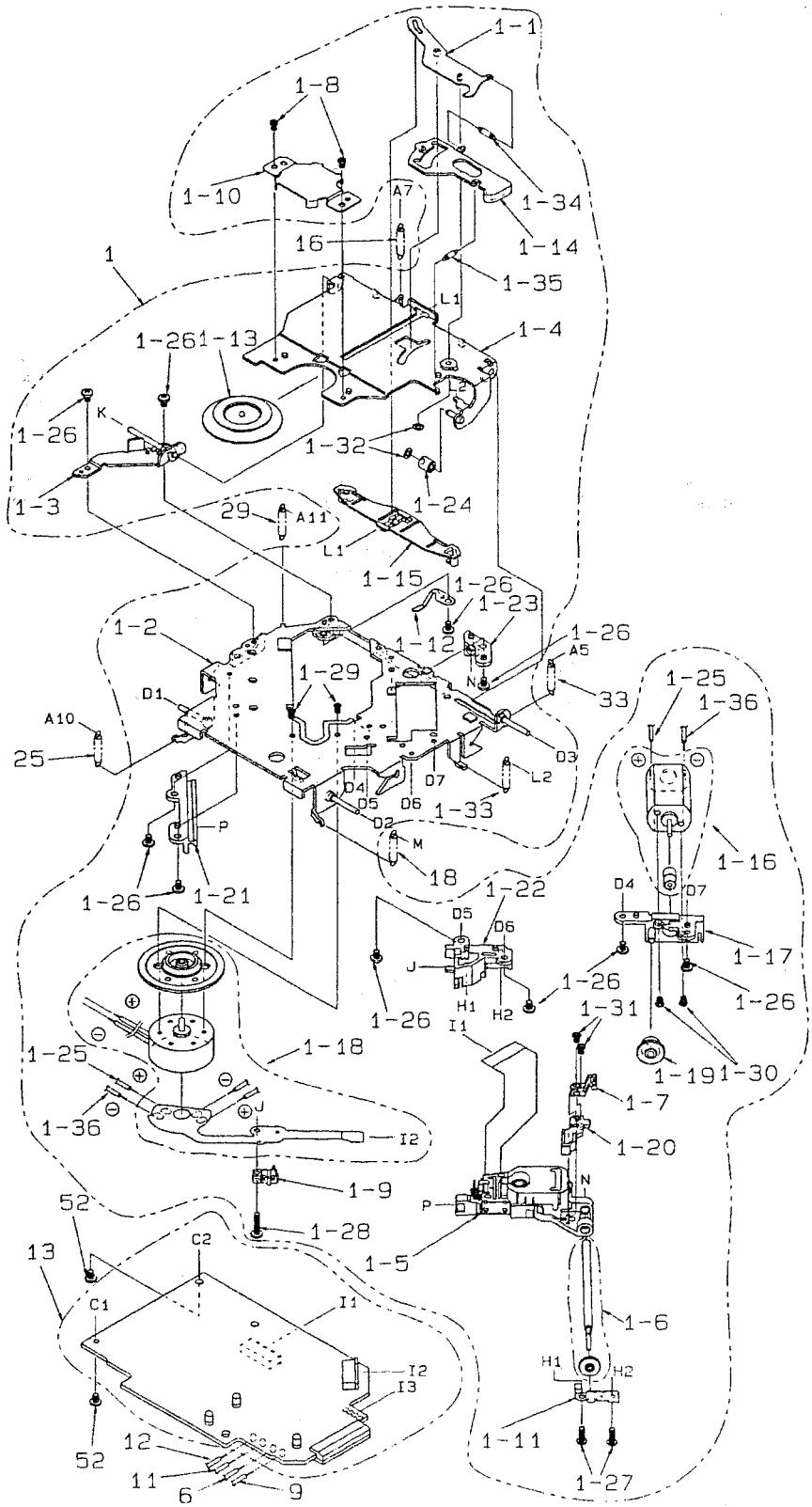

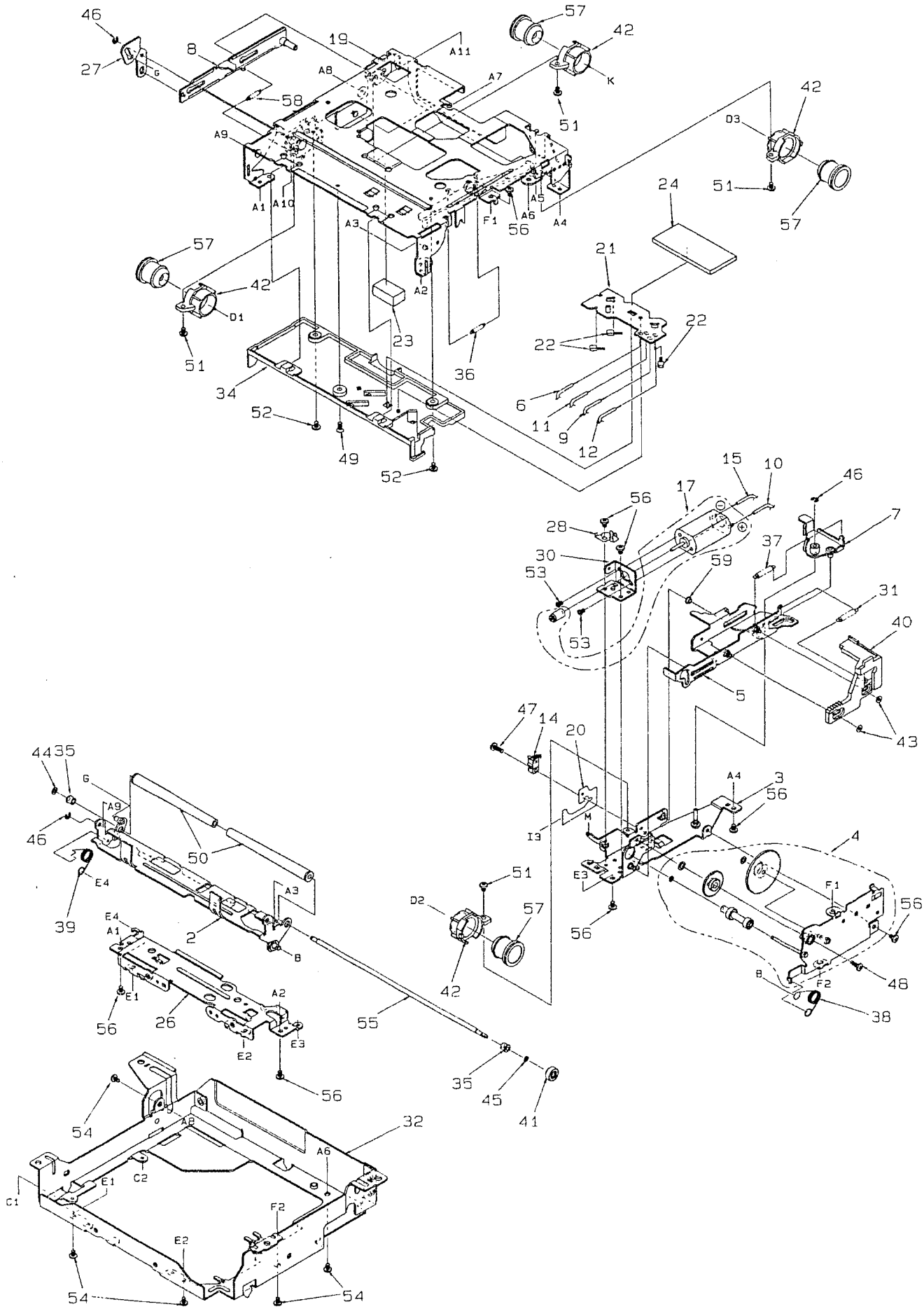

www.manualscenter.com

NO.	PART NO.	DESCRIPTION	Q'TY
1	HBS-463-100	DRIVE UNIT	1
1-1	966-0314-20	STOP LINK ASS'Y	1
1-2	966-0447-20	DR-PLATE ASS'Y	1
1-3	966-0448-20	SIDE PLATE ASS'Y	1
1-4	966-0449-20	CLAMP-LINK ASS'Y	1
1-5	969-0050-00	PICK UP (CP-2)	1
1-6	HBS-432-100	LS-GEAR ASS'Y	1
1-7	966-0454-00	SH-RACK ASS'Y	1
1-8	716-1468-00	SCREW	2
1-9	013-7100-00	SWITCH (LIMIT)	1
1-10	620-0198-03	CLAMPER PLATE	1
1-11	620-0491-03	SPRING PLATE	1
1-12	620-0690-00	RATTLE PLATE	1
1-13	621-0205-02	CLAMPER RING	1
1-14	621-0251-03	LOCK LINK	1
1-15	621-0252-03	DISC STOPPER	1
1-16	SMA-146-100	SLED MOTOR ASS'Y	1
1-17	621-0253-01	MOTOR HOLDER	1
1-18	SMA-151-100	SPINDLE MOTOR ASS'Y	1
1-19	621-0255-02	SECOND GEAR	1
1-20	621-0375-00	SH-BASE	1
1-21	621-0357-02	PICK UP GUIDE	1
1-22	621-0358-02	LS-HOLDER-F	1
1-23	621-0359-02	LS-HOLDER-R	1
1-24	622-1073-02	CLAMPER ROLLER	1
1-25	816-2373-00	WIRE LEAD (WHITE)	1
1-26	714-2003-81	MACHINE SCREW	10
1-27	716-0675-00	SCREW	2
1-28	716-1555-00	WAVE SCREW	1
1-29	716-1733-00	SCREW	2
1-30	732-2004-11	SEMS SCREW	2
1-31	739-1735-17	PRECISION SCREW	2
1-32	746-0761-00	WASHER	2
1-33	750-3097-03	CLAMPER SPRING	1
1-34	750-3098-00	L-LINK SPRING	1
1-35	750-3099-00	ES-SPRING	1
1-36	816-2372-00	WIRE LEAD (BLUE)	1
2	966-0309-04	L-DISC-G ASS'Y	1
3	966-0310-20	SFT-P-CH ASS'Y	1
4	HBS-430-100	GEAR-P ASS'Y	1
5	966-0312-20	SHIFT-P ASS'Y	1
6	804-4910-60	VINYL-COAT-WIRE	1
7	966-0358-20	DRIVE-L-PL ASS'Y	1
8	966-0359-20	SIDE-L-PL ASS'Y	1
9	802-4910-60	VINYL-COAT-WIRE	1
10	802-4904-60	VINYL-COAT-WIRE	1
11	801-4910-60	VINYL-COAT-WIRE	1
12	800-4910-60	VINYL-COAT-WIRE	1

NO.	PART NO.	DESCRIPTION	Q'TY
13	HBS-462-100	PMCD-PWB ASS'Y	1
14	013-3879-01	SWITCH (CHACKING)	1
15	800-4904-60	VINYL-COAT-WIRE	1
16	750-3202-00	CENTER SPRING-B	1
17	SMA-147-100	LOADING MOTOR ASS'Y	1
18	750-3201-00	DR-SPRING-F-R	1
19	966-0308-20	CHASSIS ASS'Y	1
20	039-0586-01	PWB (CHA-SW-FP)	1
21	039-0588-01	PWB (SENSOR)	1
22	060-0252-01	PHOTO-TR	3
23	345-7513-01	CLAMPER SHEET	1
24	345-7514-00	S-PWB SHEET	1
25	750-3188-00	DR-SPRING-F-B	1
26	620-0485-03	FRONT PLATE	1
27	620-0488-01	S-L-LINK PLATE	1
28	620-0489-01	MOTOR PLATE	1
29	750-3164-00	DR-SPRING-LR	1
30	620-0492-01	MOTOR BRACKET	1
31	750-3098-00	L-LINK SPRING	1
32	620-0738-00	MECH-BRACKET	1
33	750-3096-01	DR-SPRING R	1
34	621-0402-00	U-DISC GUIDE	1
35	621-0243-02	ROLLER SLEEVE	2
36	750-3094-00	S-ARM SPRING	1
37	750-3092-03	SHIFT SPRING	1
38	750-3091-03	RO-SPRING-R	1
39	750-3090-02	RO-SPRING-L	1
40	621-0248-06	RACK GEAR	1
41	621-0249-02	ROLLER GEAR	1
42	621-0250-01	DAMPER HOLDER	4
43	746-0877-02	WASHER	2
44	746-0762-00	WASHER	1
45	746-0712-03	WASHER	1
46	743-1500-10	E-RING	3
47	716-1742-00	SCREW	1
48	716-1704-00	SCREW	1
49	716-1677-00	SCREW	1
50	621-0258-03	LOADING ROLLER	2
51	716-1670-00	SCREW	4
52	716-1507-00	SCREW	4
53	716-1468-00	SCREW	2
54	714-2603-81	MACHINE SCREW	5
55	622-1072-05	ROLLER SHAFT	1
56	714-2003-81	MACHINE SCREW	8
57	629-0058-00	DAMPER-VA	4
58	750-3189-00	SIDE-L-SPRING	1
59	622-1219-01	SHIFT ROLLER	1

■CIRCUIT DIAGRAM

Main circuit section(1/2)

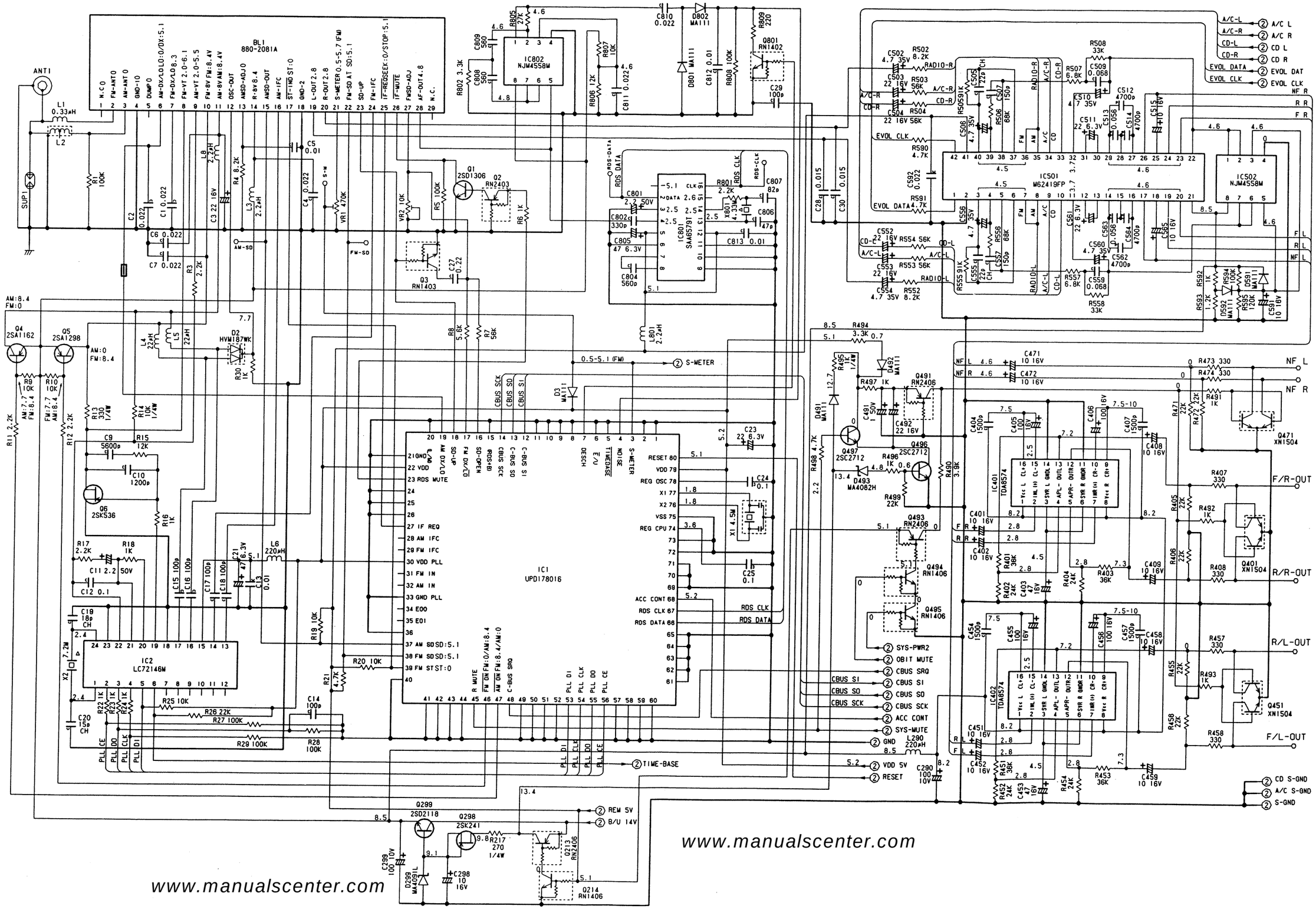

www.manualscenter.com

www.manualscenter.com

Main circuit section(2/2)

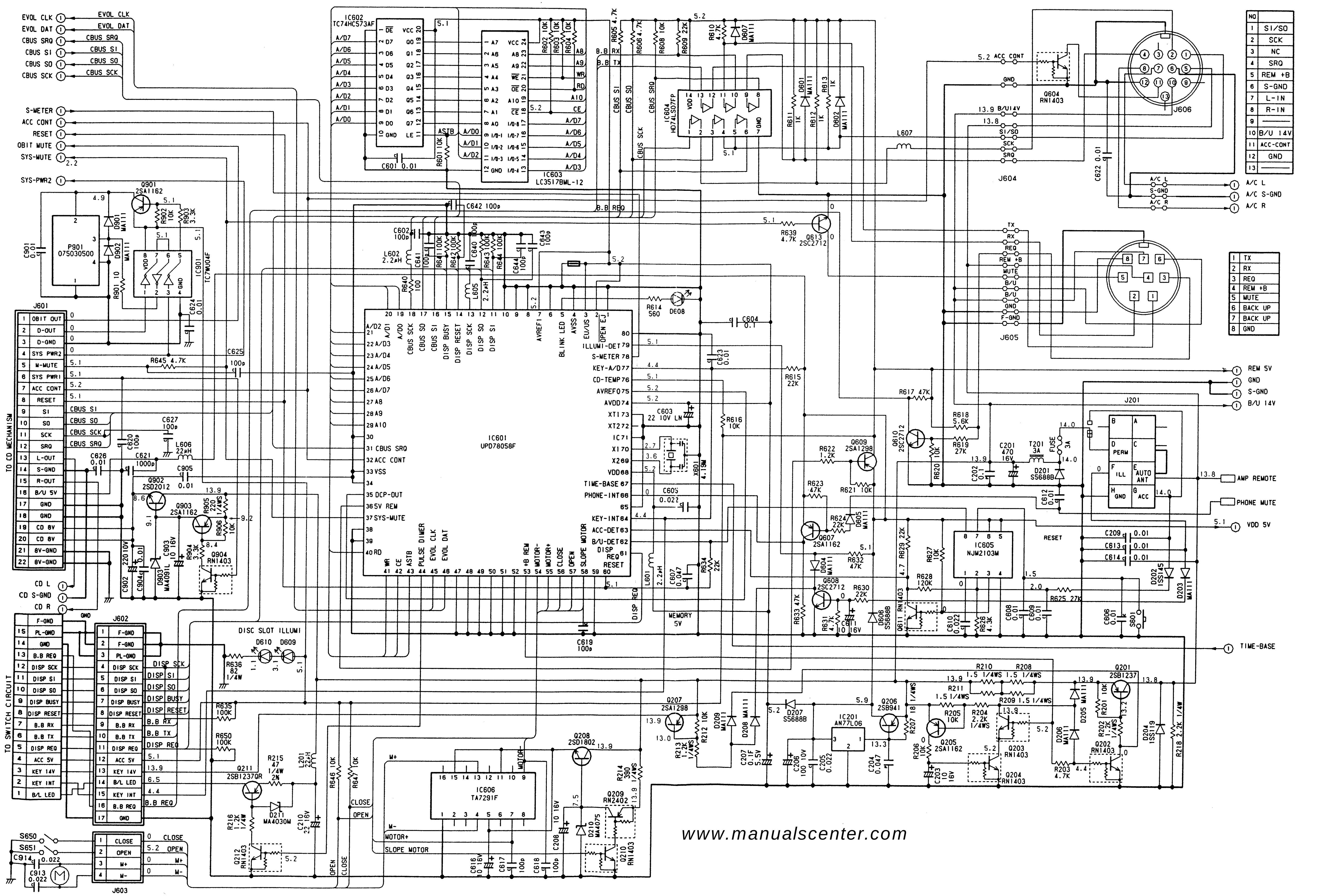

NO	
1	SI/SO
2	SCK
3	NC
4	SRQ
5	REM +B
6	S-GND
7	L-IN
8	R-IN
9	———
10	B/U 14V
11	ACC-CONT
12	GND
13	———

1	TX
2	RX
3	REQ
4	REM +B
5	MUTE
6	BACK UP
7	BACK UP
8	GND

www.manualscenter.com

Switch circuit section

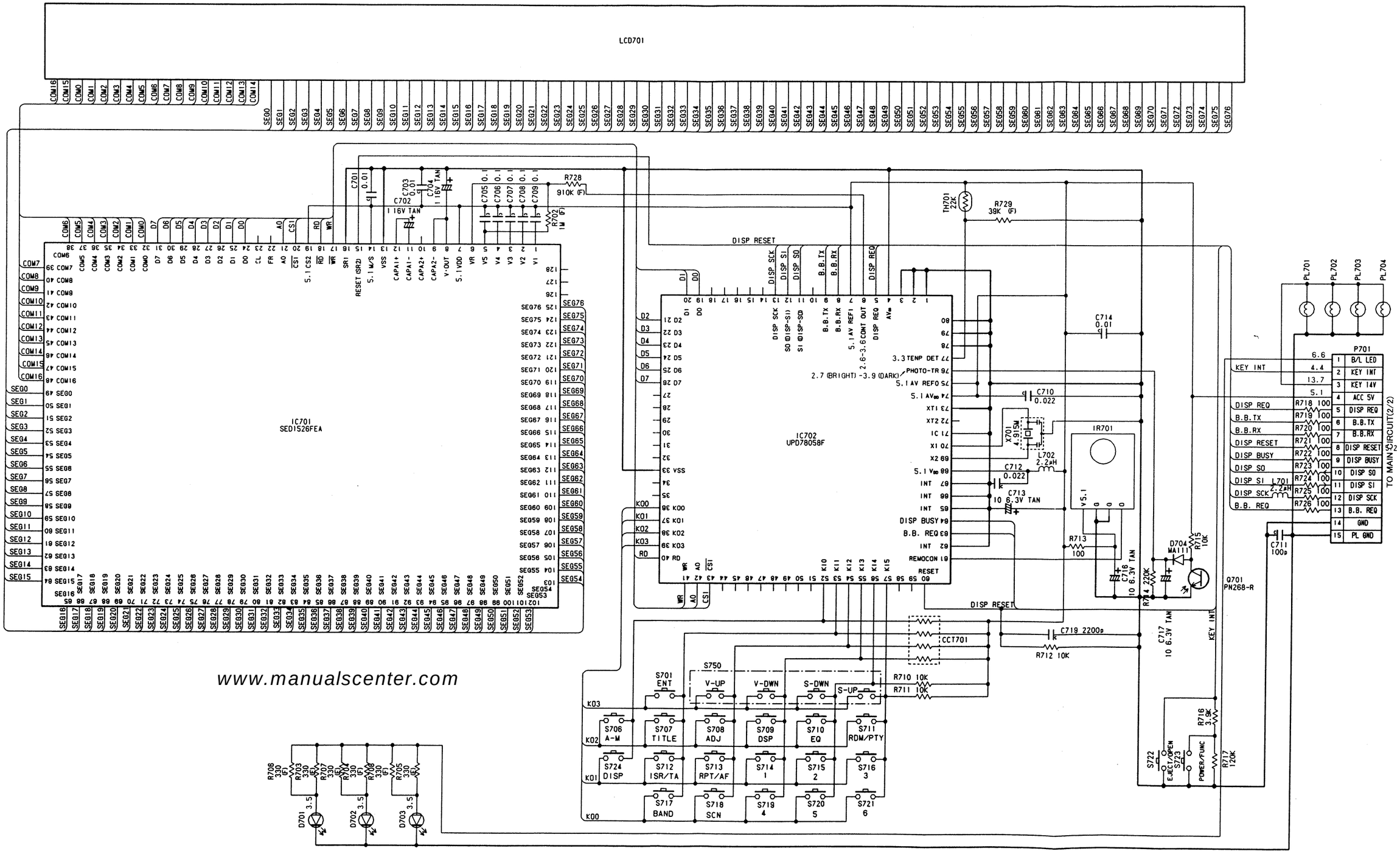

www.manualscenter.com

■PRINTED WIRING BOARD

CD mechanism PWB section:
929-0067-00(PM-CD)

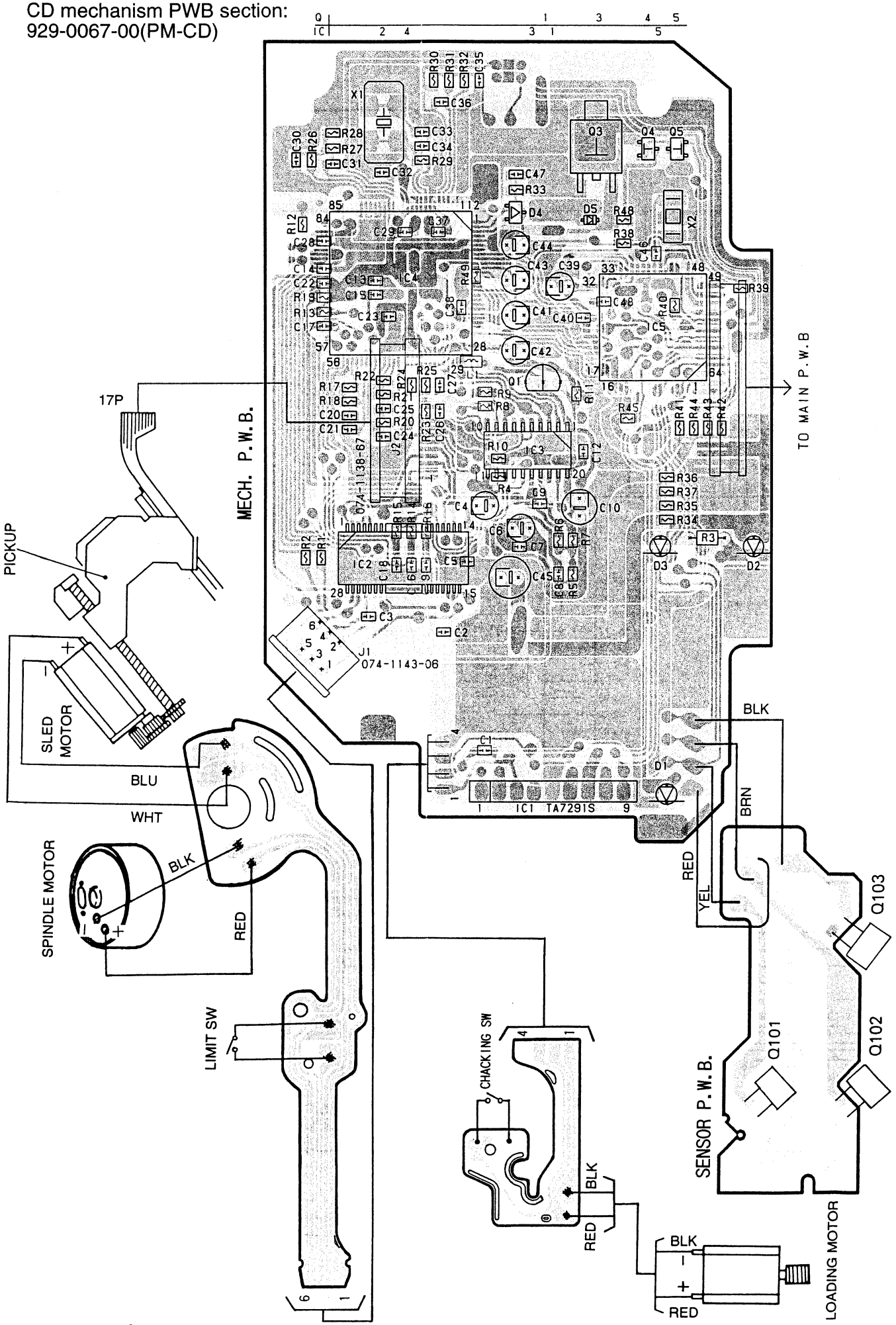

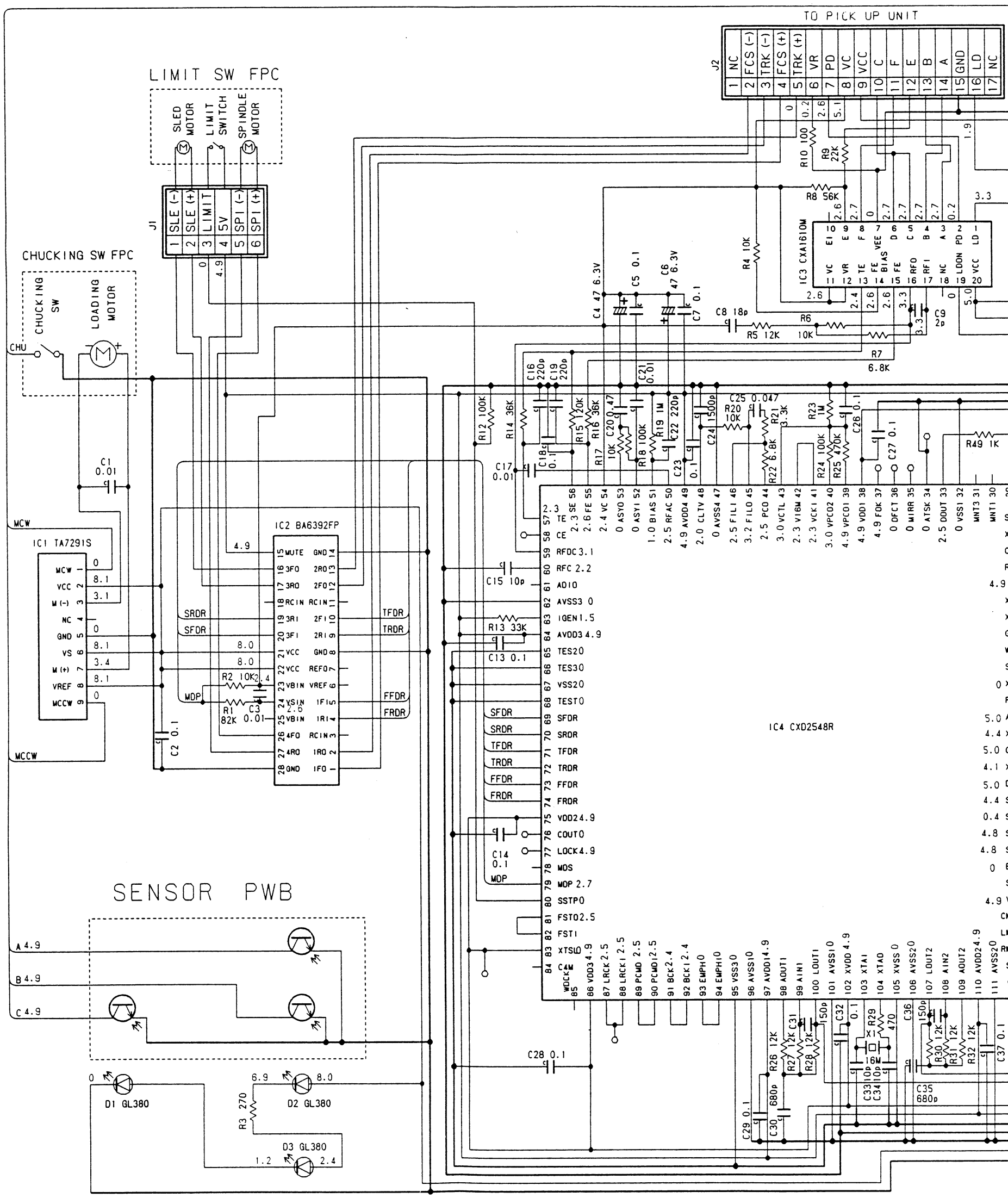

www.manualscenter.com

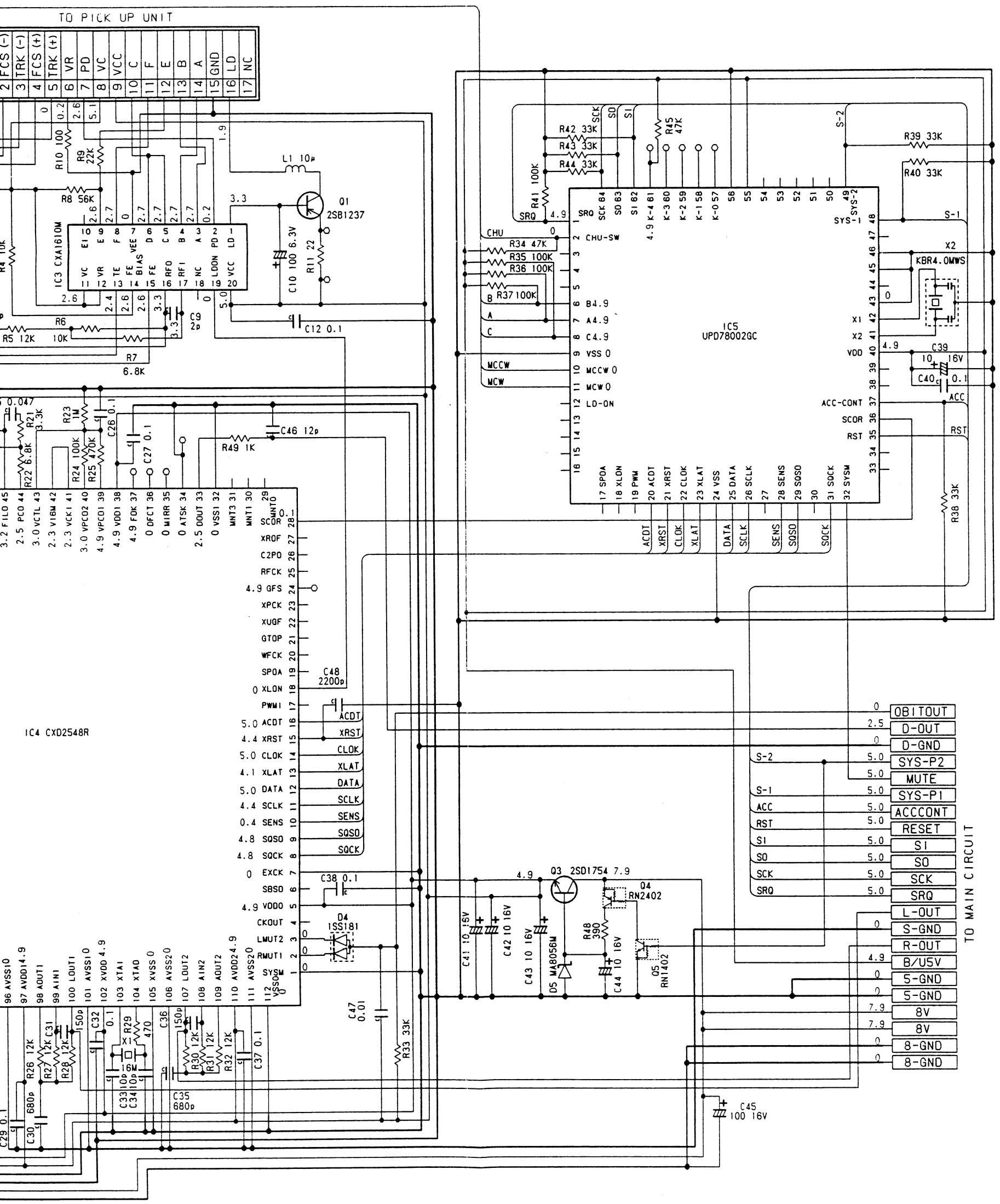

www.manualscenter.com

■PRINTED WIRING BOARD

Main/switch PWB section

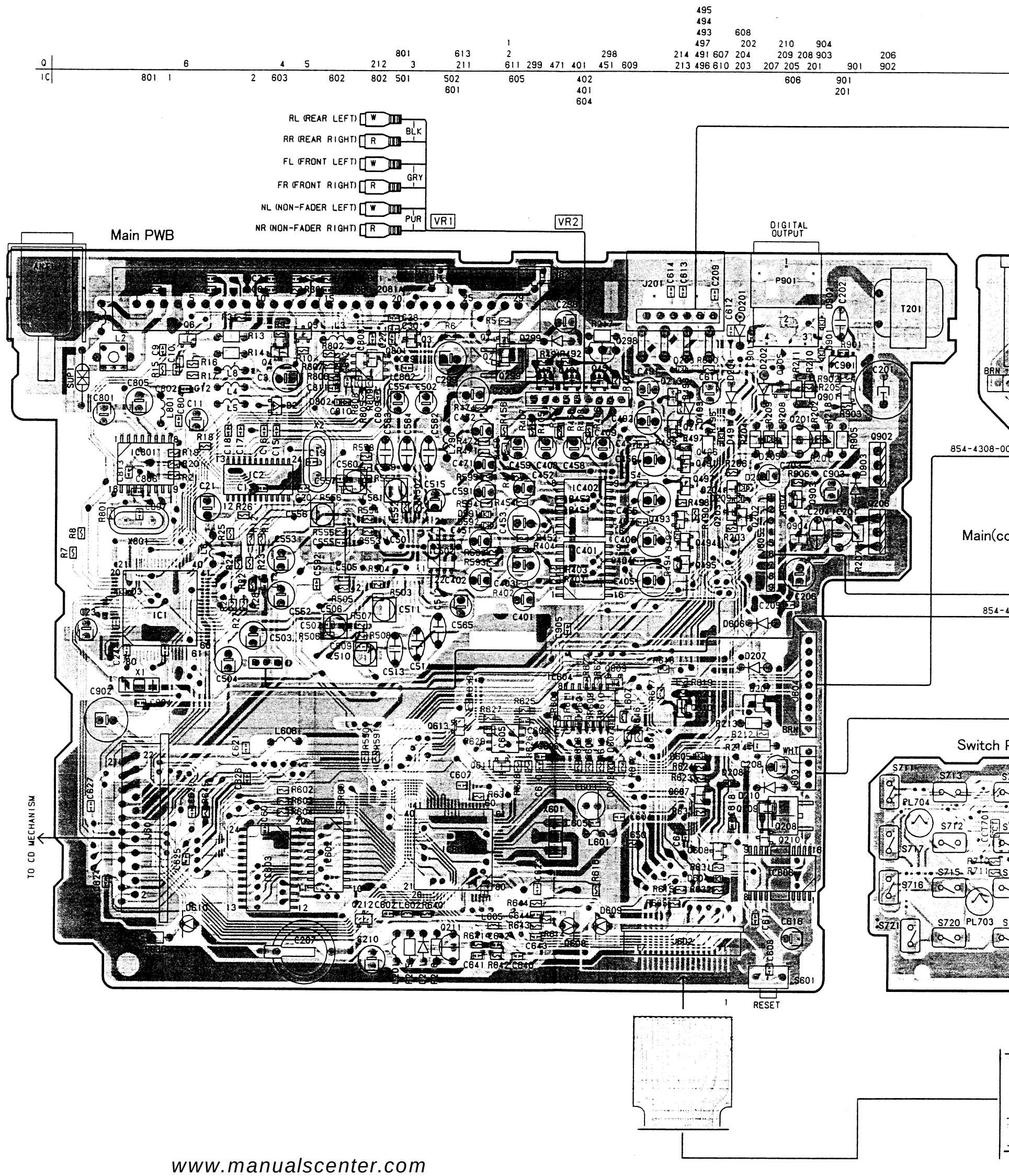

www.manualscenter.com

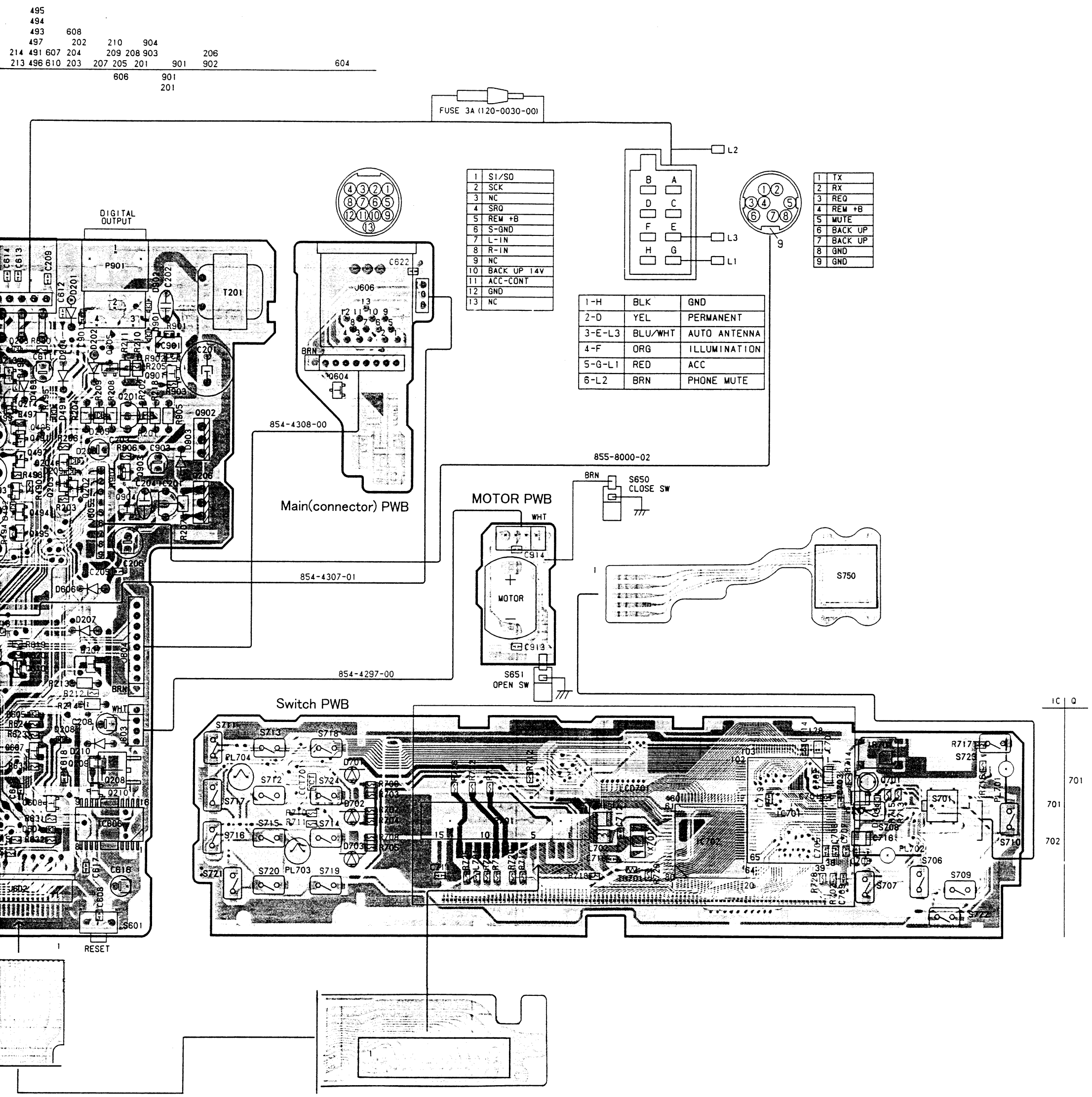

1	SI/SO
2	SCK
3	NC
4	SRQ
5	REM +B
6	S-GND
7	L-IN
8	R-IN
9	NC
10	BACK UP 14V
11	ACC-CONT
12	GND
13	NC

1	TX
2	RX
3	REQ
4	REM +B
5	MUTE
6	BACK UP
7	BACK UP
8	GND
9	GND

1-H	BLK	GND
2-D	YEL	PERMANENT
3-E-L3	BLU/WHT	AUTO ANTENNA
4-F	ORG	ILLUMINATION
5-G-L1	RED	ACC
6-L2	BRN	PHONE MUTE

www.manualscenter.com